WORKSHOP MANUAL

NHR • NKR • NPR

ENGINE
4H SERIES

SECTION 6

ISUZU

MEMO

NOTICE

Before using this Workshop Manual to assist you in performing vehicle service and maintenance operations, it is recommended that you carefully read and thoroughly understand the information contained in Section 0A under the headings "GENERAL REPAIR INSTRUCTIONS" and "HOW TO USE THIS MANUAL".

All material contained in this Manual is based on latest product information available at the time of publication.
All rights are reserved to make changes at any time without prior notice.

Applicable Model :

N Series		
NKR66	NPS66	NQR71
NPR66	NPS71	
NPR70	NQR66	
NPR71	NQR70	

This manual is applicable to 1996 year model and later vehicles except those sold in the United States of America, and Canada.

THIS MANUAL INCLUDES THE FOLLOWING SECTIONS:

SECTION NO.	CONTENTS
00	Service Information
6A	Engine Mechanical
6A3	Engine (4HF1/4HF1-2/4HE1-T/4HE1-TC/4HG1/4HG1-T)
6B	Engine Cooling
6C	Fuel System
6D	Engine Electrical
6E	Emission and Electrical Diagnosis
6F	Exhaust
6G	Turbocharger

SECTION 00

SERVICE INFORMATION

CONTENTS

	PAGE
Troubleshooting	00 - 2
Main Data and Specifications	00 - 19
Service Standard	00 - 28
Servicing	00 - 42
Fixing Torque	00 - 59
Special Tools	00 - 70
Lubricating System	00 - 72

TROUBLESHOOTING

CONTENTS

	PAGE
Hard Starting	00 - 3
Starter Motor Inoperative	00 - 3
Starter Motor Operates but Engine does not turn over	00 - 3
Engine turns over but does not start	00 - 4
Fuel is not being delivered to the injection pump	00 - 4
Fuel is being delivered to the injection pump	00 - 4
Quick-on Start System	00 - 5
Unstable Idling	00 - 10
Insufficient Power	00 - 11
Excessive Fuel Consumption	00 - 12
Excessive Oil Consumption	00 - 12
Overheating	00 - 13
White Exhaust Smoke	00 - 13
Dark Exhaust Smoke	00 - 14
Oil Pressure Does Not Rise	00 - 14
Abnormal Engine Noise	00 - 15
Engine Knocking	00 - 15
Gas Leakage Noise	00 - 15
Continuos Noise	00 - 15
Slapping Noise	00 - 16
Engine Cooling Trouble	00 - 17
Starter Motor Does Not Stop	00 - 18

1. HARD STARTING

1. STARTER MOTOR INOPERATIVE		
Checkpoint	**Possible cause**	**Correction**
Battery	Loose battery cable terminal Poor connections due to rusting	Clean and/or retighten the battery cable terminal
	Battery discharged or weak	Recharge or replace the battery
	Fan belt loose or broken	Adjust or replace the fan belt
Fusible link	Fusible link shorted	Replace the fusible link
Starter switch	Defective starter switch or starter relay	Replace the starter switch or the starter relay
Starter motor	Defective magnetic switch or starter relay	Repair or replace the magnetic switch
	Defective starter motor	Repair or replace the starter motor
2. STARTER MOTOR OPERATES BUT ENGINE DOES NOT TURN OVER		
Battery	Loose battery cable terminal Poor connections due to rusting	Clean and/or retighten the battery cable terminal
	Battery discharged or weak	Recharge or replace the battery
	Fan belt loose or broken	Adjust or replace the fan belt
Starter motor	Defective pinion gear	Replace the pinion gear
	Defective magnetic switch	Repair or replace the magnetic switch
	Brush wear, Weak brush spring	Replace the brush and/or the brush spring
Engine	Piston, crank bearing seizure, or other damage	Repair or replace the related parts

3. ENGINE TURNS OVER BUT DOES NOT START		
Checkpoint	**Possible cause**	**Correction**
Engine stop mechanism	Defective fuel cut solenoid valve	Replace the fuel cut solenoid valve
FUEL IS NOT BEING DELIVERED TO THE INJECTION PUMP		
Fuel	Fuel tank is empty	Fill the fuel tank
Fuel piping	Clogged or damaged fuel lines. Loose fuel line connection	Repair or replace the fuel lines Retighten the fuel line connection
Fuel filter	Fuel filter overflow valve does not close	Repair or replace the fuel filter overflow valve
	Clogged fuel filter element	Replace the fuel filter element or the filter cartridge
Fuel system	Air in the fuel system	Bleed the air from the fuel system
Fuel feed pump	Defective feed pump	Repair or replace the feed pump
FUEL IS BEING DELIVERED TO THE INJECTION PUMP		
Fuel	Use of the wrong fuel	Use the correct fuel
	Water particles in the fuel	Charge the fuel
Fuel system	Air in the injection pump	Bleed the air from the fuel system
Injection nozzle	Injection nozzle sticking	Replace the injection nozzle
	Injection nozzle injection starting pressure too low Improper spray condition	Adjust or replace the injection nozzle
Injection pump	Defective fuel injection nozzle resulting in the fuel drippage after fuel injection	Replace the delivery valve
	Defective injection pump control rack operation	Repair or replace the injection pump control rack
	Injection pump plunger worn or stuck	Replace the injection pump plunger assembly
	Injection pump drive shaft seizure or other damage	Replace the injection drive shaft
	Injection pump governor spring seizure	Replace the injection pump governor spring

4. QUICK-ON START SYSTEM		
Check point	**Possible cause**	**Correction**
Glow plug indicator light does not turn on.	1. Defective Fusible link wire 2. Broken indicator light fuse 3. Defective indicator bulb	Replace the fusible link wire Replace the indicator light fuse Replace the indicator light bulb
Preheating system dose not work	1. Defective fusible link wire shorted 2. Defective glow plug relay connector 3. Defective glow plug connector 4. Defective quick-on start timer connector	Replace the fusible link wire Replace or Repair glow plug relay connector Replace or Repair glow plug connector Replace or Repair quick-on start timer connector
Preheating time to long or to short	1. Defective thermo switch include defective wiring harness 2. Defective glow plug 3. Defective timer unit	Replace thermo switch Replace glow plug Replace timer unit

Check if battery is normal, then perform the following diagnosis.

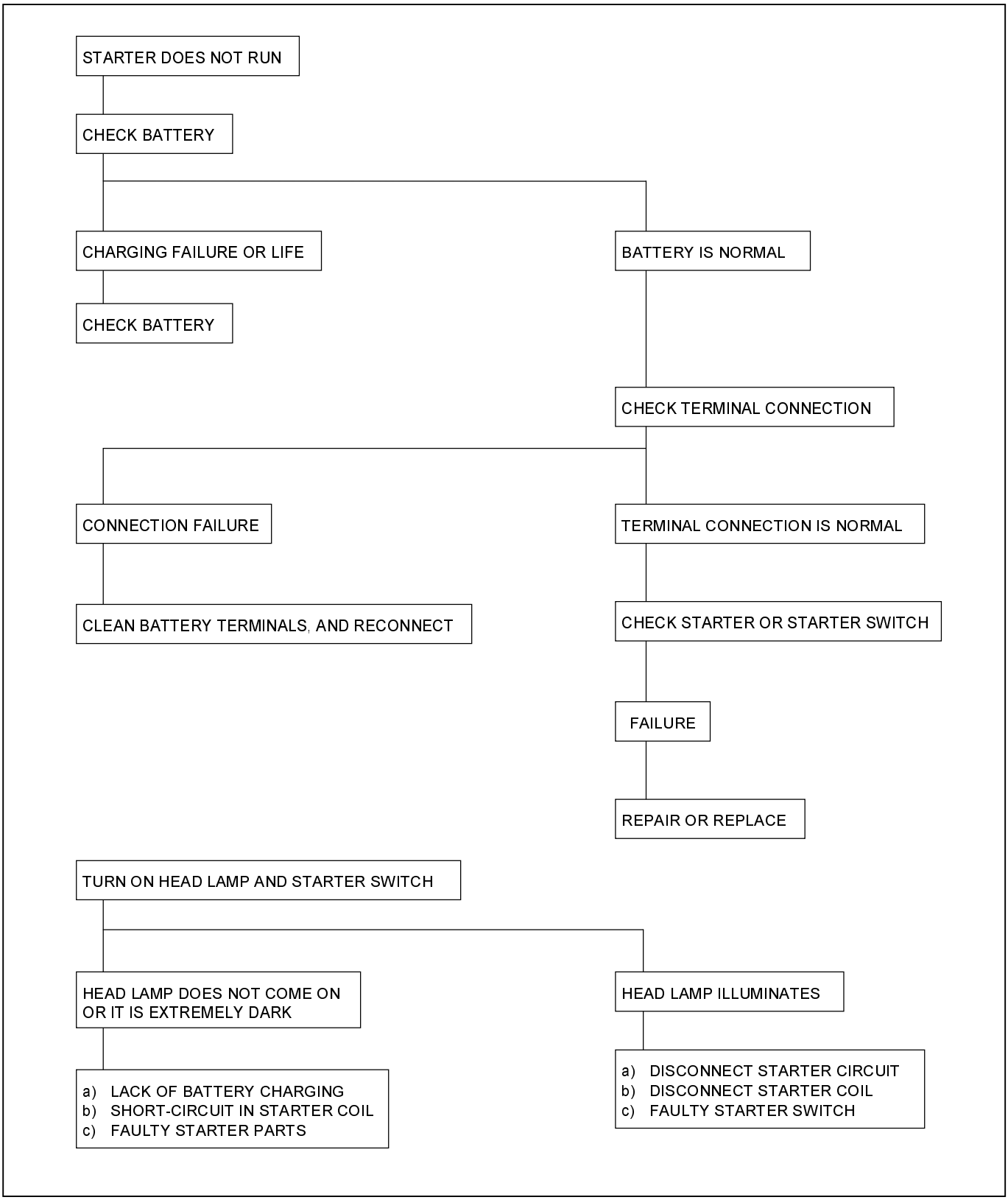

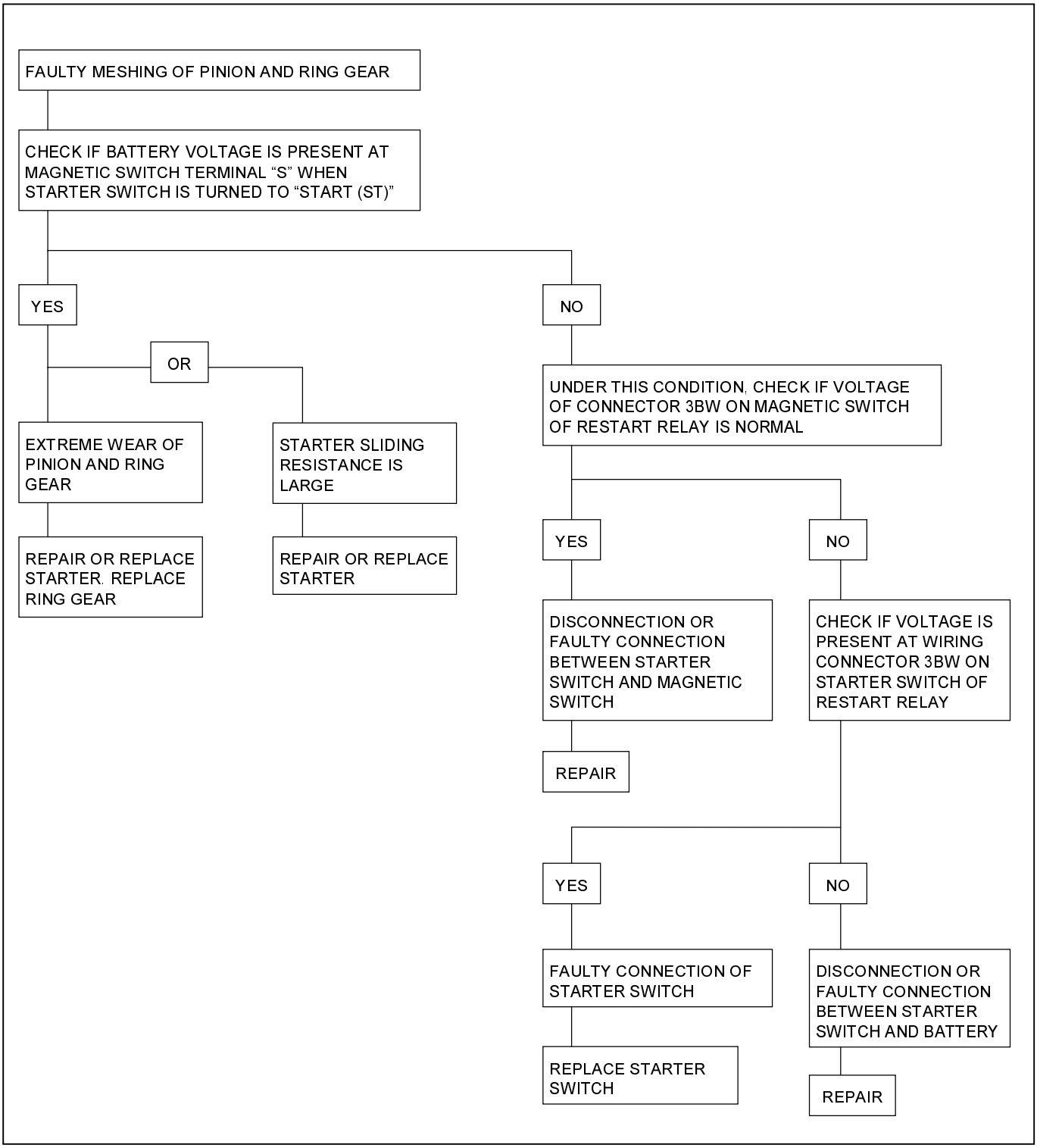
FAULTY MESHING OF PINION AND RING GEAR
CHECK IF BATTERY VOLTAGE IS PRESENT AT MAGNETIC SWITCH TERMINAL “S” WHEN STARTER SWITCH IS TURNED TO “START (ST)”
YES
NO
OR
EXTREME WEAR OF PINION AND RING GEAR
STARTER SLIDING RESISTANCE IS LARGE
REPAIR OR REPLACE STARTER. REPLACE RING GEAR
REPAIR OR REPLACE STARTER
UNDER THIS CONDITION, CHECK IF VOLTAGE OF CONNECTOR 3BW ON MAGNETIC SWITCH OF RESTART RELAY IS NORMAL
YES
NO
DISCONNECTION OR FAULTY CONNECTION BETWEEN STARTER SWITCH AND MAGNETIC SWITCH
CHECK IF VOLTAGE IS PRESENT AT WIRING CONNECTOR 3BW ON STARTER SWITCH OF RESTART RELAY
REPAIR
YES
NO
FAULTY CONNECTION OF STARTER SWITCH
DISCONNECTION OR FAULTY CONNECTION BETWEEN STARTER SWITCH AND BATTERY
REPLACE STARTER SWITCH
REPAIR

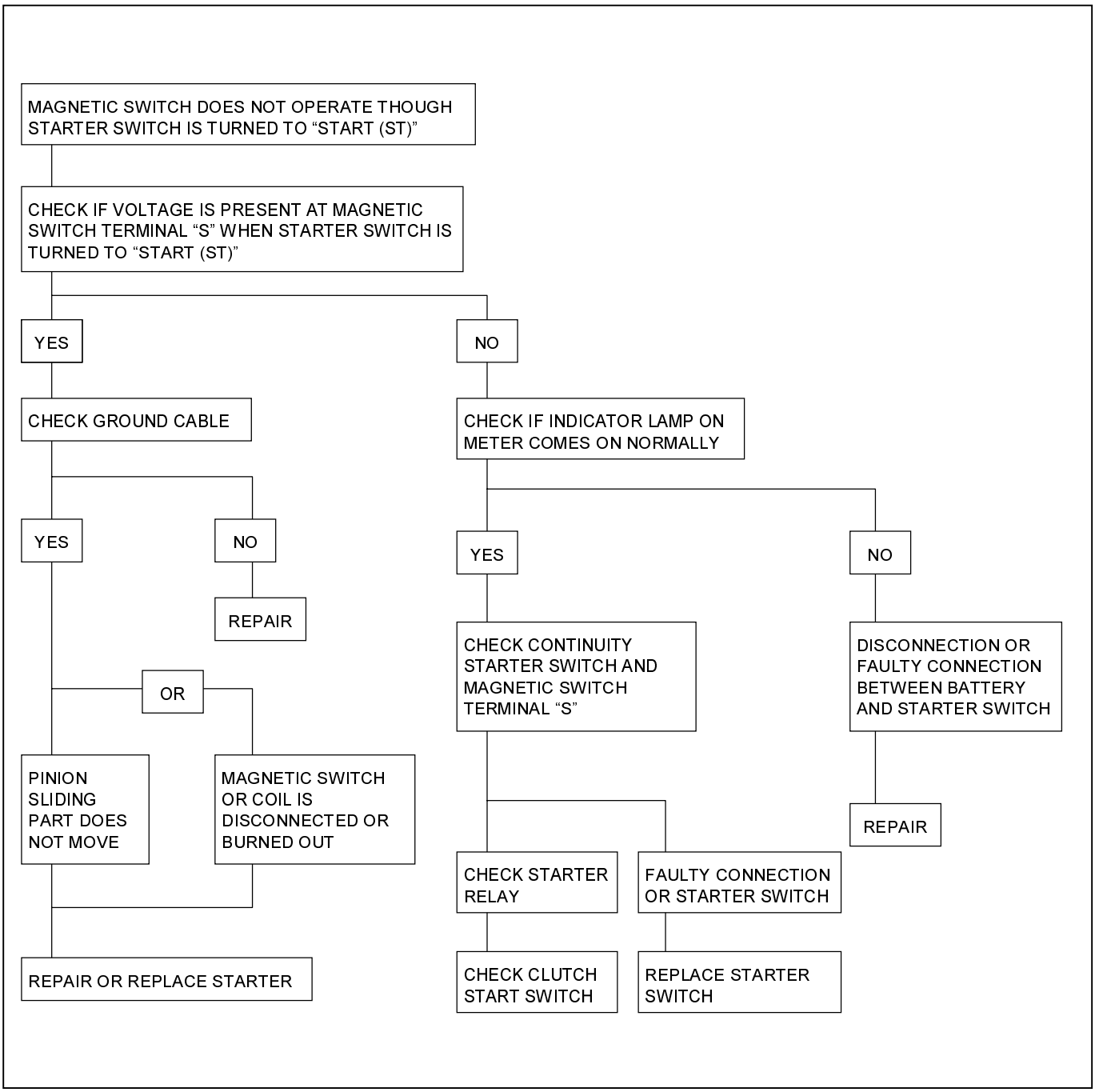
MAGNETIC SWITCH DOES NOT OPERATE THOUGH STARTER SWITCH IS TURNED TO “START (ST)”
CHECK IF VOLTAGE IS PRESENT AT MAGNETIC SWITCH TERMINAL “S” WHEN STARTER SWITCH IS TURNED TO “START (ST)”
YES
NO
CHECK GROUND CABLE
CHECK IF INDICATOR LAMP ON METER COMES ON NORMALLY
YES
NO
REPAIR
YES
NO
CHECK CONTINUITY STARTER SWITCH AND MAGNETIC SWITCH TERMINAL “S”
DISCONNECTION OR FAULTY CONNECTION BETWEEN BATTERY AND STARTER SWITCH
OR
PINION SLIDING PART DOES NOT MOVE
MAGNETIC SWITCH OR COIL IS DISCONNECTED OR BURNED OUT
REPAIR
CHECK STARTER RELAY
FAULTY CONNECTION OR STARTER SWITCH
REPAIR OR REPLACE STARTER
CHECK CLUTCH START SWITCH
REPLACE STARTER SWITCH

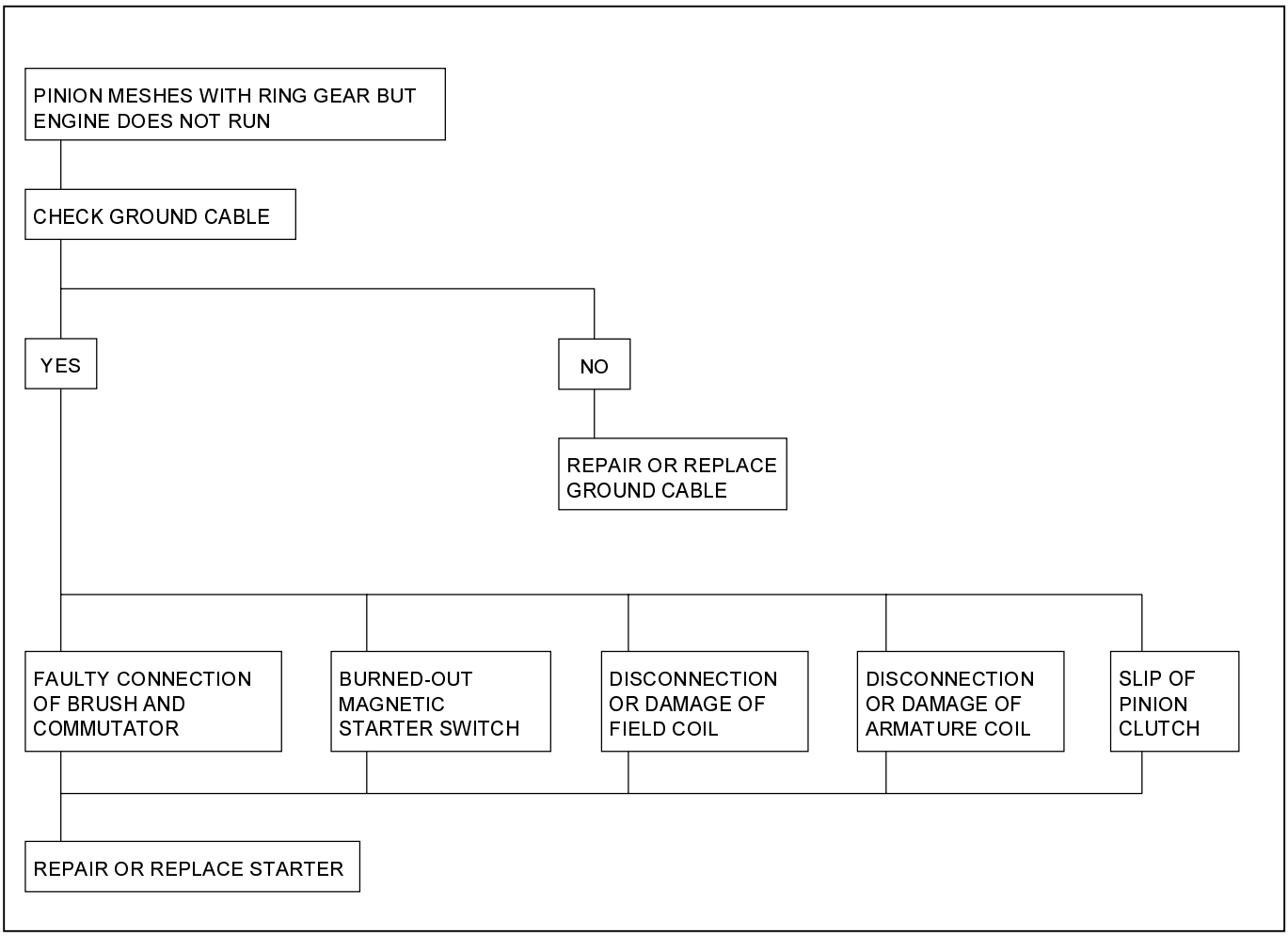
PINION MESHES WITH RING GEAR BUT ENGINE DOES NOT RUN
CHECK GROUND CABLE
YES
NO
REPAIR OR REPLACE GROUND CABLE
FAULTY CONNECTION OF BRUSH AND COMMUTATOR
BURNED-OUT MAGNETIC STARTER SWITCH
DISCONNECTION OR DAMAGE OF FIELD COIL
DISCONNECTION OR DAMAGE OF ARMATURE COIL
SLIP OF PINION CLUTCH
REPAIR OR REPLACE STARTER

2. UNSTABLE IDLING

Check point	Possible cause	Correction
Idling system	Idling improperly adjusted	Adjust the idling
Fast idling speed control device	Defective fast idling speed control device	Repair or replace the fast idling speed control device
Accelerator control system	Accelerator control system improperly adjusted	Adjust the accelerator control system
Fuel system	Fuel system leakage or blockage	Repair or replace the fuel system
	Air in the fuel system	Bleed the air from the fuel system
	Water particles in the fuel system	Change the fuel
Fuel filter	Clogged fuel filter element	Replace the fuel filter element or the fuel filter cartridge
Fuel feed pump	Defective fuel feed pump	Repair or replace the fuel feed pump
Injection nozzle	Injection nozzle sticking	Replace the injection nozzle
	Injection nozzle injection starting pressure too low Improper spray condition	Adjust or replace the injection nozzle
Injection pump	Defective delivery valve resulting in fuel drippage after fuel injection	Replace the delivery valve
Injection pump (Cont'd)	Injection timing improperly adjusted	Adjust the injection timing
	Insufficient injection volume	Adjust the injection volume
	Defective idle spring	Replace the idle spring
	Defective governor lever operation	Repair or replace the governor lever
	Regulator valve improperly adjustment	Adjust or replace the regulator valve
	Broken plunger spring	Replace the plunger spring
	Worn plunger	Replace the plunger assembly
	Worn cam disc	Replace the cam disc
Valve clearance	Valve clearance improperly adjusted	Adjust the valve clearance
Compression pressure	Blown out cylinder head gasket Worn cylinder liner Piston ring sticking between the valve and the valve seat	Replace the related parts

3. INSUFFICIENT POWER

Check point	Possible cause	Correction
Air cleaner	Clogged air cleaner element	Clean or replace the air cleaner element
Fuel	Water particle in the fuel	Replace fuel
Fuel filter	Clogged fuel filter element	Replace the fuel filter element or the fuel filter cartridge
Fuel feed pump	Defective fuel feed pump	Repair or replace the fuel feed pump
Injection nozzle	Injection nozzle sticking	Replace the injection nozzle
	Injection nozzle injection starting pressure too low Improper spray condition	Adjust or replace the injection nozzle
Fuel injection pipes	Fuel injection pipes damaged or obstructed	Replace the fuel injection pipes
Injection pump	Defective regulating valve	Repair or replace the regulating valve
	Defective delivery valve	Replace the delivery valve
	Defective timer	Repair or replace the timer
	Worn cam disk	Replace the cam disk
	Improper control lever operation	Adjust or replace the control lever
	Defective injection timing	Adjust the injection timing Repair or replace the injection pump timer
	Weak governor spring	Replace the governor spring
	Worn plunger	Replace the plunger assembly
Compression pressure	Blown out cylinder head gasket Worn cylinder liner Piston ring sticking	Replace the related parts
Valve clearance	Valve clearance improperly adjusted	Adjust the valve clearance
Valve spring	Valve spring weak or broken	Replace the valve spring
Exhaust system	Exhaust pipe clogged	Clean the exhaust pipe
Full load adjusting screw seal	Open and improperly set adjusting screw seal	Adjust and reseal the adjusting screw

4. EXCESSIVE FUEL CONSUMPTION

Check point	Possible cause	Correction
Fuel system	Fuel leakage	Repair or replace the fuel system related parts
Air cleaner	Clogged air cleaner element	Clean or replace the air cleaner element
Idling speed	Poorly adjusted idling speed	Adjust the idling speed
Injection nozzle	Injection nozzle injection starting pressure too low Improper spray condition	Adjust or replace the injection nozzle
Fuel injection timing	Fuel injection timing improperly	Adjust the fuel injection timing
Injection pump	Defective delivery valve resulting is fuel drippage after fuel injection	Replace the delivery valve
Valve clearance	Valve clearance improperly adjusted	Adjust the valve clearance
Compression pressure	Blown out cylinder head gasket Worn cylinder liner Piston ring sticking	Replace the related parts
Valve spring	Valve spring weak or broken	Replace the valve spring

5. EXCESSIVE OIL CONSUMPTION

Check point	Possible cause	Correction
Engine oil	Engine oil unsuitable Too much engine oil	Replace the engine oil Correct the engine oil level
Oil seal and gasket	Oil leakage from the oilseal and/or the gasket	Replace the oil seal and/or the gasket
Air breather	Clogged air breather	Clean the air breather
Intake and exhaust valve	Worn valve stems and valve guides	Replace the intake and exhaust valves and the valve guides

6. OVERHEATING

Check point	Possible cause	Correction
Cooling water	Insufficient cooling water	Replenish the cooling water
Fan clutch	Oil leakage from the fan clutch	Replace the fan clutch
Fan belt	Fan belt loose or cracked causing slippage	Replace the fan belt
Radiator	Defective radiator cap or clogged radiator core	Replace the radiator cap or clean the radiator core
Water pump	Defective water pump	Repair or replace the water pump
Cylinder head and cylinder body sealing cap	Defective sealing cap resulting in water leakage	Replace the sealing cap
Thermostat	Defective thermostat	Replace the thermostat
Cooling system	Cooling system clogged by foreign material	Clean the foreign material from the cooling system
Fuel injection timing	Fuel injection timing improperly adjusted	Adjust the fuel injection timing

7. WHITE EXHAUST SMOKE

Check point	Possible cause	Correction
Fuel	Water particles in the fuel	Replace the fuel
Fuel injection timing	Delayed fuel injection timing	Adjust the fuel injection timing
Compression pressure	Blown out cylinder head gasket Worn cylinder liner Piston ring sticking	Replace the related parts
Inlet and exhaust valves Valves seals	Defective valve seales Worn valves stems and valve guides	Replace the valve seales, the valves, and the valve guides

8. DARK EXHAUST SMOKE

Check point	Possible cause	Correction
Air cleaner	Clogged air cleaner element	Clean or replace the air cleaner element
Injection nozzle	Injection nozzle injection starting pressure too low Improper spray condition	Adjust or replace the injection nozzle
Fuel injection timing	Fuel injection timing improperly adjusted	Adjust the fuel injection timing
Injection pump	Defective delivery valve resulting in fuel drippage after fuel injection	Replace the delivery valve
	Excessive injection volume	Adjust the injection volume

9. OIL PRESSURE DOES NOT RISE

Check point	Possible cause	Correction
Engine oil	Improper viscosity engine oil Insufficient engine oil	Replace the engine oil Correct the engine oil volume
Oil pressure gauge or unit Oil pressure indicator light	Defective oil pressure gauge or unit Defective indicator light	Repair or replace the oil pressure gauge or unit Replace the indicator light
Oil filter	Clogged oil filter element	Replace the oil filter element or the oil filter cartridge
Relief valve and by-pass valve	Relief valve sticking and/or weak by-pass valve spring	Replace the relief valve and/or the by-pass valve spring
Oil pump	Clogged oil pump strainer	Clean the oil pump strainer
	Worn oil pump related parts	Replace the oil pump related parts
Rocker arm shaft	Worn rocker arm bushing	Replace the rocker arm bushing
Camshaft	Worn camshaft and camshaft bearing	Replace the camshaft and the camshaft bearing
Crankshaft and bearings	Worn crankshaft and bearings	Replace the crankshaft and/or the bearings

10. ABNORMAL ENGINE NOISE

1. ENGINE KNOCKING		
Check to see that the engine has been thoroughly warmed up before beginning the troubleshooting procedure.		
Check point	**Possible cause**	**Correction**
Fuel	Fuel unsuitable	Replace the fuel
Fuel injection timing	Fuel injection timing improperly adjusted	Adjust the fuel injection timing
Injection nozzle	Improper injection nozzle starting pressure and spray condition	Adjust or replace the injection nozzle
Compression pressure	Blown out head gasket	Broken piston ring Replace the head gasket or the piston ring
2. GAS LEAKAGE NOISE		
Exhaust pipes	Loosely connected exhaust pipes Broken exhaust pipes	Tighten the exhaust pipe connections Replace the exhaust pipes
Injection nozzles and/or glow plugs	Loose injection nozzles and /or glow plugs	Replace the washers Tighten the injection nozzles and/or the glow plugs
Exhaust manifold	Loosely connected exhaust manifold and/or glow plugs	Tighten the exhaust manifold connections
Cylinder head gasket	Damaged cylinder head gasket	Replace the cylinder head gasket
3. CONTINUOUS NOISE		
Fan belt	Loose fan belt	Readjust the fan belt tension
Cooling fan	Loose cooling fan	Retighten the cooling fan
Water pump bearing	Worn or damaged water pump bearing	Replace the water pump bearing
Alternator or vacuum pump	Defective alternator or vacuum pump	Repair or replace the alternator or the vacuum pump
Valve clearance	Clearance improperly adjust	Adjust the valve clearance

4. SLAPPING NOISE		
Check point	**Possible cause**	**Correction**
Valve clearance	Valve clearance improperly adjusted	Adjust the valve clearance
Rocker arm	Damaged rocker arm	Replace the rocker arm
Flywheel	Loose flywheel bolts	Retighten the flywheel bolts
Crankshaft and thrust bearings	Worn or damaged crankshaft and/or thrust bearings	Replace the crankshaft and/or the thrust bearings
Crankshaft and connecting rod bearings	Worn or damaged crankshaft and/or connecting rod bearings	Replace the crankshaft and/or the connecting rod bearings
Connecting rod bushing and piston pin	Worn or damaged connecting rod bushing and piston pin	Replace the connecting rod bushing and/or the piston pin
Piston and cylinder liner	Worn or damaged piston and cylinder liner Foreign material in the cylinder	Replace the piston and the cylinder liner

11. ENGINE COOLING TROUBLE

Condition	Possible cause	Correction
Engine overheating	Low coolant level	Replenish
	Thermo unit faulty	Replace
	Faulty thermostat	Replace
	Faulty coolant unit	Repair or replace
	Clogged radiator	Clean or replace
	Faulty radiator cap	Replace
	Low engine oil level or use of improper engine oil	Replenish or change oil Replenish
	Damaged cylinder head gasket	Replace
	Clogged exhaust system	Clean exhaust system or replace faulty parts
	Loose fan belt	Adjust
	Excessive fuel injected	Adjust
	Improper injection timing	Adjust
Engine overcooling	Faulty thermostat	Replace
Too long engine warm-up time	Faulty thermostat	Replace
	Thermo unit faulty	Replace

12. STARTER MOTOR DOES NOT STOP

STARTER DOES NOT STOP THOUGH STARTER SWITCH IS RETURNED TO “ON”

DISCONNECTED STARTER SWITCH WIRING CONNECTOR, AND CHECK STARTER SWITCH OPERATION.

STARTER SWITCH KEY POSITION	Connector No.	B-67				B-68				
	Terminal No.	1	2	3	4	1	2	4	5	6
	Terminal No.	ACC	B	ON	ST	B_1	P_1	P_2	W	W
OFF	LOCK					○—○				
ON	ACC	○—○							○—○	
	ON	○—○	○—○			○—	—○			
	START		○—○	○—○		○—	—○			

THERE MUST BE NO CONTINUITY EXCEPT ABOVE LINES.

YES

MAGNETIC SWITCH CONTACTS ARE FUSED AND NOT MOVED, OR A RETURN SPRING IS BROKEN OR DETERIORATED

REPLACE MAGNETIC SWITCH

NO

REPLACE STARTER SWITCH

MAIN DATA AND SPECIFICATIONS

MAIN DATA AND SPECIFICATIONS

Item \ Engine Model		4HF1	4HF1-2
Engine type		Four-cycle, overhead camshaft, water cooled	
Combustion chamber type		Direct injection	
Cylinder liner type		Dry liner, special compound metal	
Timing drive system		Gear drive	
No. of cylinders - Bore x stroke	mm (in)	4 - 112 × 110 (4 - 4.41 × 4.33)	
No. of piston rings		Compression rings: 2, Oil ring: 1	
Total piston displacement	cm^3 (in^3)	4334 (264.5)	
Compression ratio	to : 1	19.0	
Compression pressure	kPa (kg / cm^2 / psi) - rpm	3,040 (31/441) – 200	3,226 (32.9/468) - 200
Fuel injection order		1 - 3 - 4 - 2	
Fuel injection timing (BTDC)	deg	8 7° (Taiwan only)	12
Specified fuel type		SAE No. 2 diesel fuel	
Idling speed	rpm	550 ~ 600 (M/T)	575 ~ 625 (M/T)
Valve system			
Valve clearances (At cold): Intake	mm (in)	0.4 (0.016)	
Exhaust	mm (in)	0.4 (0.016)	
Valve timing (At valve clearances 0.4 mm (0.016 in))			
Intake valves Open at (BTDC)	deg	18	
Close at (ABDC)	deg	50	
Exhaust valves Open at (BBDC)	deg	51	
Close at (ATDC)	deg	17	
Fuel system			
Injection pump type		Bosch in-line type with automatic timer	Bosch “VE” distributor with automatic timer
Plunger outside diameter	mm (in)	9.5 (0.374)	12 (0.472)
Plunger lift	mm (in)	11.0 (0.433)	2.8 (0.110)
Governor type		RLD-F mechanical (Variable speed)	Half all speed governor
Automatic timer type		SCDM, centrifugal, flyweight	Hydraulic speed sensing type
Fuel feed pump type		Piston	Vane
Injection nozzle type			
Injection nozzle type		Hole type (with 5 orifices)	
Pressure	MPa (kg / cm^2 / psi)	18.1 (185 / 2,631)	
Pressure adjustment		Shim adjusted	
Main fuel filter type		Disposal spin-on cartridge and remote mounted water separator	

Item \ Engine Model		4HF1	4HF1-2
Lubricating system			
Lubrication method		Full flow pressure circulation	
Specified engine oil (API grade)		CD or above	
Oil pressure	kPa (kg /cm^2 / psi) - rpm	147 (1.5 / 21)-700 (SAE 10W-30 API CD grade engine oil at 80°C (176°F))	
Oil pump type		Gear type	
Oil filter type		Spin-on cartridge	
Oil capacity	lit (US / UK gal)	10.5 (2.77 / 2.31)	
Oil cooler type		Water cooled	
Cooling system			
Radiator type		Corrugated fin with reserve tank	
Coolant capacity	lit (US / UK gal)	12 (3.17 / 2.64)	
Water pump type		Centrifugal impeller, V-belt drive	
Pump to crankshaft speed ratio	to : 1	1.16 (175 / 151)	
Delivery volume	lit (US / UK gal)/min	200 (52.8 / 44.0) (Pump speed at 3,300 rpm Water temperature at 82°C (180°F))	
Pump bearing type		Double row shaft	
Thermostat type		Wax pellet	
Valve initial opening temperature	°C (°F)	With jiggle valve	Primary : 85±1.5 (182 - 188)
		Without jiggle valve	(Heaterless) Primary : 85±1.5 (182 - 188) Secondary: 82±1.5 (177 - 182)
Valve lift	mm (in)	8 (0.3) or more at 95°C (203°F)	
Air cleaner type		Dry paper element	
Battery type	Volt-amp.hr.	55D23R / 12-60 : 2 pcs	
Generator			
Type		AC brush with IC regulator and vacuum pump	
Voltage	V	24	
Drive and rotation		V-belt, clockwise viewed from the drive pulley	
Ground polarity		Negative	
Maximum output	A	35 at 5,000 rpm (For Thailand and Indonesian)	50 at 5,000 rpm
		60 at 5,000 rpm	80 at 5,000 rpm
Maximum speed	rpm	7,500 ~ 10,000	

Item \ Engine Model		4HF1	4HF1-2
Regulator			
Type		IC	
Regulating voltage	V	28 - 29	
Vacuum pump			
-500 mmHg (-9.67 psi / -66.7 kPa) build-up time		13 seconds or less at 1,000 rpm 4 seconds or less at 5,000 rpm	
Maximum vacuum		-680 mmHg (-13.1 psi / -90.7 kPa) or more at 5,000 rpm	
Starter motor			
Type		Magnetic solenoid-controlled	
Model		S25-168	
Rated voltage	V	24	
Rated output	kW	4.0	
Load characteristics			
Terminal voltage	V	18.55	
Load current	A	250	
Torque	N•m (kg•m / lb•ft)	14.22 (1.45 / 10.49) at 1,500 rpm or more	
Preheating system		Quick-On-Start System II	
Exhaust system			
Pipe outside diameter X thickness			
Front pipe	mm (in)	60.5 x 2.0 (2.38 x 0.079)	
Middle pipe	mm (in)	60.5 x 2.0 (2.38 x 0.079)	
Rear pipe	mm (in)	60.5 x 1.6 (2.38 x 0.063)	
Silencer		Circular section-shell construction of triple	
Type		skin and end plates, internal construction of baffles and perforated tubes	
Inside diameter	mm (in)	Approximately 200 (7.87)	

MAIN DATA AND SPECIFICATIONS

GENERAL SPECIFICATIONS

Item \ Engine Model		4HG1	4HG1-T
Engine type		Four-cycle, overhead camshaft, water cooled	
Combustion chamber type		Direct injection	
Cylinder liner type		Dry liner, special compound metal	
Timing drive system		Gear drive	
No. of cylinders - Bore × stroke	mm (in)	4 - 115 × 110 (4 - 4.53 × 4.33)	
No. of piston rings		Compression rings: 2, Oil ring: 1	
Total piston displacement	cm^3 (in^3)	4570 (278.9)	
Compression ratio	to : 1	19.0	
Compression pressure	kPa (kg / cm^2 / psi) - rpm	3,226 (32.9/468) - 200	
Fuel injection order		1 - 3 – 4 - 2	
Fuel injection timing (BTDC)	deg	9	7 (Except Colombia) 9 (For Colombia)
Specified fuel type		SAE No. 2 diesel fuel	
Idling speed	rpm	550 ~ 600 (M/T)	600 ~ 650 (M/T)
Valve system			
Valve clearances (At cold): Intake	mm (in)	0.4 (0.016)	
Exhaust	mm (in)	0.4 (0.016)	
Valve timing (At valve clearances 0.4 mm (0.016 in))			
Intake valves Open at (BTDC)	deg	18	
Close at (ABDC)	deg	50	
Exhaust valves Open at (BBDC)	deg	51	
Close at (ATDC)	deg	17	
Fuel system			
Injection pump type		Bosch in-line type with automatic timer	
Plunger outside diameter	mm (in)	9.5 (0.374)	10.5 (0.413)
Plunger lift	mm (in)	11.0 (0.433)	
Governor type		RLD-F mechanical (Variable speed)	
Automatic timer type		SCDM, centrifugal, flyweight	
Fuel feed pump type		Piston	
Injection nozzle opening			
Injection nozzle type		Hole type (with 5 orifices)	
Pressure	MPa (kg / cm^2 / psi)	18.1 (185 / 2,631)	1st 18.1 (185 / 2,631) 2nd 21.1 (215 / 3,057)
Pressure adjustment		Shim adjusted	
Main fuel filter type		Disposal spin-on cartridge and remote mounted water separator	

Item \ Engine Model		4HG1	4HG1-T
Lubricating system			
Lubrication method		Full flow pressure circulation	
Specified engine oil (API grade)		CD or above	
Oil pressure	kPa (kg /cm^2 / psi) - rpm	147 (1.5 / 21)-700 (SAE 10W-30 API CD grade engine oil at 80°C (176°F))	
Oil pump type		Gear type	
Oil filter type		Spin-on cartridge	
Oil capacity	lit (US / UK gal)	10.5 (2.77 / 2.31)	
Oil cooler type		Water cooled	
Cooling system			
Radiator type		Corrugated fin with reserve tank	
Coolant capacity	lit (US / UK gal)	12 (3.17 / 2.64)	
Water pump type		Centrifugal impeller, V-belt drive	
Pump to crankshaft speed ratio	to : 1	1.19 (175 / 147)	
Delivery volume	lit (US / UK gal)/min	200 (52.8 / 44.0) (Pump speed at 3,300 rpm Water temperature at 82°C (180°F))	
Pump bearing type		Double row shaft	
Thermostat type		Wax pellet	
Valve initial opening temperature	°C (°F)	With jiggle valve Without jiggle valve	Primary : 85±1.5 (182 - 188) (Heaterless) Primary : 85±1.5 (182 - 188) Secondary: 82±1.5 (177 - 182)
Valve lift	mm (in)	8 (0.3) or more at 95°C (203°F)	
Air cleaner type		Dry paper element or oil bath	
Battery type	Volt-amp.hr.	75D23R / 12-65 : 2 pcs	
Generator			
Type		AC brush with IC regulator and vacuum pump	
Voltage	V	24	12 or 24
Drive and rotation		V-belt, clockwise viewed from the drive pulley	
Ground polarity		Negative	
Maximum output	A	35 at 5,000 rpm 60 at 5,000 rpm	50 at 5,000 rpm 80 (12V) at 5,000 rpm
Maximum speed	rpm	7,500 ~ 10,000	

Item \ Engine Model		4HG1	4HG1-T	
Regulator				
Type		IC		
Regulating voltage	V	28 - 29	14.4 ± 0.3	28 - 29
Vacuum pump				
-66.7kPa (-500 mmHg / -9.67 psi) build-up time		13 seconds or less at 1,000 rpm 4 seconds or less at 5,000 rpm		
Maximum vacuum		-90.7 kPa (-680 mmHg / -13.1 psi) or more at 5,000 rpm		
Starter motor				
Type		Magnetic solenoid-controlled		
Model		S25-168	R3.0	S25 - 168
Rated voltage	V	24	12	24
Rated output	kW	4.0	3.0	4.0
Load characteristics				
Terminal voltage	V	18.55	14.0	18.55
Load current	A	250	890 (MAX)	250
Torque	N•m (kg•m / lb•ft)	14.22 (1.45 / 10.49) at 1,500 rpm or more	29.4 (2.99 / 21.63) at 860 rpm or more	14.22 (1.45 / 10.49) at 1,500 rpm or more
Preheating system		Quick-On-Start System II		
Exhaust system				
Pipe outside diameter x thickness				
Front pipe	mm (in)	60.5 x 2.0 (2.38 x 0.079)		
Middle pipe	mm (in)	60.5 x 2.0 (2.38 x 0.079)		
Rear pipe	mm (in)	60.5 x 1.6 (2.38 x 0.063)		
Silencer type		Circular section-shell construction of triple skin and end plates, internal construction of baffles and perforated tubes		
Inside diameter	mm (in)	Approximately 200 (7.87)		

MAIN DATA AND SPECIFICATIONS

GENERAL SPECIFICATIONS

Item \ Engine Model		4HE1-T	4HE1-TC
Engine type		Four-cycle, overhead camshaft, water cooled	
Combustion chamber type		Direct injection	
Cylinder liner type		Dry liner, special compound metal	
Timing drive system		Gear drive	
No. of cylinders - Bore × stroke	mm (in)	4 - 110 × 125 (4 - 4.33 × 4.92)	
No. of piston rings		Compression rings 2, oil ring 1	Compression rings 3, oil ring 1
Total piston displacement	cm^3 (in^3)	4751(289.9)	
Compression ratio	to : 1	18	17.3
Compression pressure	kPa (kg / cm^2 / psi) - rpm	3,040 (31/441) - 200	
Fuel injection order		1 - 3 - 4 - 2	
Fuel injection timing (BTDC)	deg	7	8
Specified fuel type		SAE No. 2 diesel fuel	
Idling speed	rpm	550 ~ 600 (M/T) 640 ~ 690 (A/T)	775 ~ 825 (M/T) 775 ~ 825 (A/T)
Valve system			
Valve clearances (At cold): Intake	mm (in)	0.4 (0.016)	
Exhaust	mm (in)	0.4 (0.016)	
Valve timing (At valve clearances 0.4 mm (0.016 in))			
Intake valves Open at (BTDC)	deg	14	
Close at (ABDC)	deg	51	
Exhaust valves Open at (BBDC)	deg	49	
Close at (ATDC)	deg	16	
Fuel system			
Injection pump type		Bosch in-line type with automatic timer	
Plunger outside diameter	mm (in)	10 (0.394)	11 (0.433)
Plunger lift	mm (in)	9.0 (0.354)	12 (0.472)
Governor type		RLD-F mechanical (Variable speed)	RLD-M mechanical (Variable speed)
Automatic timer type		SCDM, centrifugal, flyweight	
Fuel feed pump type		Piston	
Injection nozzle opening			
Injection nozzle type		Hole type (with 5 orifices)	Hole type (with 6 orifices)
Pressure	MPa (kg / cm^2 / psi)	1st 17.5 (180 / 2,560) 2nd 21.57 (220 / 3,128)	21.57 (220 / 3,128)
Pressure adjustment		Shim adjusted	
Main fuel filter type		Disposal spin-on cartridge and remote mounted water separator	

Item \ Engine Model		4HE1-T	4HE1-TC
Lubricating system			
Lubrication method		Full flow pressure circulation	
Specified engine oil (API grade)		CD or above	
Oil pressure	kPa (kg /cm^2 / psi) - rpm	147 (1.5 / 21)-700 (SAE 10W-30 API CD grade engine oil at 80°C (176°F))	
Oil pump type		Gear type	
Oil filter type		Spin-on cartridge	
Oil capacity	lit (US / UK gal)	13 (3.43 / 2.86)	
Oil cooler type		Water cooled	
Cooling system			
Radiator type		Corrugated fin with reserve tank	
Coolant capacity	lit (US / UK gal)	14 (3.70 / 3.08)	
Water pump type		Centrifugal impeller, V-belt drive	
Pump to crankshaft speed ratio	to : 1	1.16	
Delivery volume	lit (US / UK gal)/min	200 (52.8 / 44.0) (Pump speed at 3,300 rpm Water temperature at 82°C (180°F))	
Pump bearing type		Double row shaft	
Thermostat type		Wax pellet	
Valve initial opening temperature	°C (°F)	Without jiggle valve Primary : 80 - 184 (176 - 183) Secondary: 83 - 87 (181 - 189)	With jiggle valve 83.5 – 86.5 (182 - 188) -
Valve lift	mm (in)	8 (0.3) or more at 95°C (203°F)	8 (0.3) or more at 100°C (212°F)
Air cleaner type		Dry paper element or wet paper element	
Battery type	Model / Volt-amp.hr.	75D23R / 12-65 : 2 pcs	80D26R / 12-65 : 2 pcs
Generator			
Type		AC brush with IC regulator and vacuum pump	
Voltage	V	24	12 or 24
Drive and rotation		V-belt, clockwise viewed from the drive pulley	
Ground polarity		Negative	
Maximum output	V / A / rpm	24 / 35 at 5,000 (Denso) 24 / 60 at 5,000 (Hitachi)	24 / 50 at 5,000 (Hitachi) 12 / 80 at 5,000 (Hitachi)
Maximum speed	rpm	7,500 ~ 10,000	

Item \ Engine Model		4HE1-T	4HE1-TC	
Regulator				
Type		IC		
Regulating voltage	V	28 - 29	14.4 ± 0.3	28 - 29
Vacuum pump				
-500 mmHg (-9.67 psi / -66.7 kPa) build-up time		13 seconds or less at 1,000 rpm 4 seconds or less at 5,000 rpm		
Maximum vacuum	mmHg (psi / kPa)	-680 (-13.1 / -90.7) or more at 5,000 rpm		
Starter motor				
Type		Magnetic solenoid-controlled		
Model		S25-305A	R3.0	S25-305A
Rated voltage	V	24	12	24
Rated output	kW	4.5	3.0	4.5
Load characteristics				
Terminal voltage	V	14.30	14.0	14.30
Load current	A	400	890 (MAX)	400
Torque	N•m (kg•m / lb•ft)	28.44 (2.90 / 20.98) at 1,500 rpm or more	29.4 (2.99 / 21.63) at 860 rpm or more	28.44 (2.90 / 20.98) at 1,500 rpm or more
Preheating system		Quick-On-Start System II		
Exhaust system				
Pipe outside diameter x thickness				
Front pipe	mm (in)	60.5 x 2.0 (2.38 x 0.079)		
Middle pipe	mm (in)	60.5 x 2.0 (2.38 x 0.079)		
Rear pipe	mm (in)	60.5 x 1.6 (2.38 x 0.063)		
Silencer type		Circular section-shell construction of triple skin and end plates, internal construction of baffles and perforated tubes		
Inside diameter	mm (in)	Approximately 200 (7.87)		

SERVICE STANDARD

Item	Service Standard	Service Limit

ENGINE

Compression Pressure KPa (kg / cm^2 / psi) / rpm	3040 (31 / 441) or more Variance in pressure between the cylinders: less than 294 (3 / 43) / 200	2,157 (22 / 312)

CYLINDER HEAD

Inlet and Exhaust Valve Seat Depression mm (in) 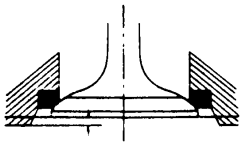	0.7 - 1.2 (0.028 - 0.047) Measurement should be taken by using a new valve.	2.5 (0.098)
Cylinder Head Lower Face Warpage mm (in)	0.05 (0.002) or less Do not regrind the cylinder head lower face.	0.2 (0.008)
Manifold Fitting Face Warpage mm (in)	0.05 (0.002) or less	0.2 (0.008)
Water Leak Test kPa (kg / cm^2 / psi)	490 (5 / 71) - 3 minutes	Repair or replace those having water leak.

Cylinder Head Gasket Selection
mm (in)

Remarks:
The grade mark of the cylinder head gasket is shown by semicircular notches on the left side of the front portion of the gasket.

4HF1/4HF1-2/4HG1-T

Cylinder Head Gasket Selection mm (in)

Gasket Grade		Ti max	Gasket Thickness (Reference)
A		0.579 - 0.659 (0.0228 - 0.0259)	1.70 (0.0669)
B	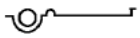	0.659 - 0.739 (0.0259 - 0.0291)	1.75 (0.0689)
C	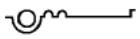	0.739 – 0.819 (0.0291 – 0.0322)	1.80 (0.0708)

4HE1-T/4HE1-TC

Cylinder Head Gasket Selection mm (in)

Gasket Grade		Ti max	Gasket Thickness (Reference)
A		0.529 - 0.609 (0.0208 - 0.0240)	1.70 (0.0669)
B		0.609 - 0.679 (0.0240 - 0.0267)	1.75 (0.0689)
C	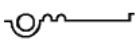	0.679 – 0.759 (0.0267 – 0.0300)	1.80 (0.0708)

Item	Service Standard	Service Limit

CAMSHAFT

Cam Height mm (in) 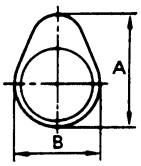	52.75 - 52.91 (2.076 - 2.083)	51.8 (2.039)
Camshaft Journal Uneven Wear mm (in)	0.015 (0.0006) or less	0.05 (0.002)
Camshaft Journal Wear mm (in)	39.950 - 39.975 (1.5728 - 1.5738)	39.850 (1.569)
Camshaft Journal and Bearing Clearance mm (in)	0.025 - 0.087 (0.00098 - 0.00343)	0.15 (0.0059)
Camshaft Run-Out mm (in)	0.04 (0.0016) or less against the adjacent journal	0.05 (0.002)

ROCKER ARM AND ROCKER ARM SHAFT

Rocker Arm Shaft Wear mm (in)	21.979 – 22.000 (0.8653 – 0.8661)	21.85 (0.860)
Rocker Arm Bushing Wear mm (in)	22.010 – 22.035 (0.8665 – 0.8675)	22.15 (0.872)
Rocker Arm and Rocker Arm Shaft Clearance mm (in)	0.010 - 0.056 (0.0004 - 0.0022)	0.2 (0.008)
Rocker Arm Shaft Run-Out mm (in)		0.3 (0.012)
Rocker Arm Roller and Pin Clearnace mm (in)	0.040 - 0.084 (0.0016 - 0.0033)	0.5 (0.020)
Roller Surface		When there is an excessive wear or deformation found, replace it. When it is damaged only slightly, correct it with an oil stone.

VALVE

Valve Stem Wear mm (in)	Inlet	8.946 - 8.961 (0.3522 - 0.3528)	8.88 (0.35)
	Exhaust	8.921 - 8.936 (0.3512 - 0.3529)	8.80 (0.34)
Valve Stem and Valve Guide Clearance mm (in)	Inlet	0.038 - 0.071 (0.0015 - 0.0028)	0.20 (0.0079)
	Exhaust	0.064 - 0.096 (0.0025 - 0.0038)	0.25 (0.0098)

Item		Service Standard	Service Limit

VALVE (CONT.)

Valve Guide and Cylinder Head Interference mm (in)		0.005 - 0.040 (0.0020 - 0.0016) Press it in with the valve guide applied with engine oil.	
Valve Thickness mm (in) 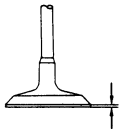	Inlet	Nominal size 1.80 (0.071)	1.3 (0.051)
	Exhaust	Nominal size 1.75 (0.069)	1.3 (0.051)
Valve Contact Width mm (in) 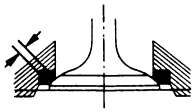	Inlet	Nominal size 2.5 (0.098)	3.0 (0.118)
	Exhaust	Nominal size 2.0 (0.079)	2.5 (0.098)
Valve Guide Upper End Height 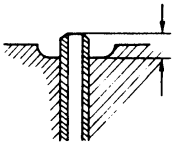 mm (in)		14.1±0.2 (0.555±0.008)	
Valve Stem Seal Lip Wear mm (in)		8.3 - 8.7 (0.3268 - 0.3425)	8.8 (0.346)
Valve Spring Tension N (kg / lb)		414 – 477 (42.2 - 48.6 / 93 - 107) Set length 47.0 mm (1.85 in)	40.9 (98 / 401)
Valve Spring Free Height mm (in)		Nominal size 62.5 (2.46)	59.4 (2.34)
Valve Spring Squareness mm (in) 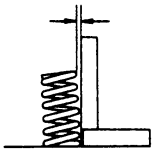			1.0 (0.04)
Valve Clearance (At cold) mm (in)		0.4 (0.016)	
Valve Stem Cap Wear mm (in) 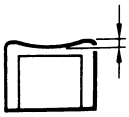			0.5 (0.02) Replace it when worn or deformed excessively.

Item	Service Standard	Service Limit

CYLINDER BODY

Cylinder Liner Bore Wear mm (in) 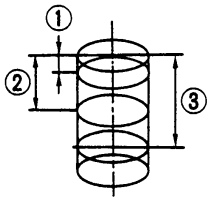 ① 20 mm (0.79 in) ② 90 mm (3.54 in) ③ 160 mm (6.30 in)	4HF1: 4HF1-2: 112.021 - 112.050 (4.4103 - 4.4114) 4HG1: 4HG1-T: 115.021 - 115.050 (4.5284 - 4.5295) 4HE1-T: 4HE1-TC: 110.041 - 110.080 (4.3323 - 4.3338)	112.20 (4.417) 115.20 (4.535) 115.20 (4.535)

Cylinder Liner Grade Selection

Remarks:

Cylinder Bore Grade Mark Position

The grade mark (1, 2 or 3) of the cylinder bore is stamped on the position just beside each cylinder on the upper left side (the upper portion of the oil cooler installation face) of the cylinder body.

Cylinder Liner Grade Mark Position

The outside diameter grade mark (1, 2 or 3) of the cylinder liner is stamped on the position approximately 160mm from the top face of the liner.

4HF1/4HF1-2

Line Grade	Cylinder Bore Diameter mm (in)	Service Grade	Liner Outside Diameter mm (in)
1	115.001 - 115.010 (4.5276 - 4.5279)	1X	114.991 - 115.000 (4.5272 - 4.5276)
2	115.011 - 115.020 (4.5280 - 4.5283)	3X	115.001 - 115.010 (4.5276 - 4.5279)
3	115.021 - 115.030 (4.5284 - 4.5287)		

4HG1/4HG1-T

1	118.001 - 118.010 (4.6457 - 4.6461)	1X	117.991 - 118.000 (4.6453 - 4.6457)
2	118.011 - 118.020 (4.6461 - 4.6464)	3X	118.001 - 118.010 (4.6457 - 4.6461)
3	118.021 - 118.030 (4.6465 - 4.6468)		

4HE1-T / 4HE1-TC

1	115.001 - 115.010 (4.5276 - 4.5279)	1X	115.021 - 115.030 (4.5284 - 4.5287)
2	115.011 - 115.020 (4.5280 - 4.5283)	3X	115.031 - 115.040 (4.5289 - 4.5291)
3	115.021 - 115.030 (4.5284 - 4.5287)		

Cylinder Liner Projection mm (in)	0.10 - 0.14 (0.0039 - 0.0055) The difference in the cylinder liner projection height between any two adjacent cylinders must not exceed 0.03 (0.0012)	There must be a projection on the cylinder liner.
Cylinder Body Upper Face Warpage mm (in)	0.05 (0.002) or less Do not regrind the cylinder body upper face.	0.02 (0.008)
Water Leak Test kPa (kg / cm^2 / psi)	490 (5 / 71) - 3 minutes	Repair or replace those having water leak.

Item		Service Standard	Service Limit

CRANKSHAFT

Crankshaft Jurnal and Crankpin Uneven Wear mm (in)			0.05 (0.002)
Crankshaft Journal Wear mm (in)	No. 1, 2, 4 and 5	81.905 - 81.925 (3.2246 - 3.2254)	81.85 (3.2224)
	No. 3	81.890 - 81.910 (3.2240 - 3.2248)	81.85 (3.2224)
Crankshaft Journal and Bearing Clearance mm (in)	No. 1, 2, 4 and 5	0.037 - 0.072 (0.0015 - 0.0028)	0.11 (0.0043)
	No. 3	0.051 - 0.086 (0.0020 - 0.0034)	0.11 (0.0043)

Crankshaft Journal Bearing Selection mm (in)

Remarks:

Crankshaft Bearing Housing Grade Mark Position

The crankshaft bearing housing grade marks (1 or 2) are stamped collectively for all cylinders on the underside of the left front portion of the cylinder body.

Crankshaft Journal Grade Mark Position

The crankshaft journal grade marks (1 or 2) are stamped collectively for all cylinders on the front side of the crankshaft No. 1 balancer

Crankshaft Bearing Grade Mark Position

The identification color code (black, brown or blue) of the crankshaft journal bearing grade mark is applied on the side of each bearing.

Crankshaft Journal No. 1, 2, 4 and 5

Bearing Housing		Crankshaft Journal		Crankshaft Bearing Color Code
Grade Mark	(Reference) Inside Diameter	Grade Mark	(Reference) Outside Diameter	
1	87.000 - 87.009 (3.4252 - 3.4255)	1	81.905 - 81.915 (3.2246 - 3.2250)	Black
		2	81.916 - 81.925 (3.2250 - 3.2254)	Brown
2	87.010 - 87.019 (3.4256 - 3.4259)	1	81.905 - 81.915 (3.2246 - 3.2250)	Blue
		2	81.916 - 81.925 (3.2250 - 3.2254)	Black

Crankshaft Journal No. 3

Bearing Housing		Crankshaft Journal		Crankshaft Bearing Color Code
Grade Mark	(Reference) Inside Diameter	Grade Mark	(Reference) Outside Diameter	
1	87.000 - 87.009 (3.4252 - 3.4255)	1	81.890 - 81.900 (3.2240 - 3.2244)	Black
		2	81.901 - 81.910 (3.2244 - 3.2248)	Brown
2	87.010 - 87.019 (3.4256 - 3.4259)	1	81.890 - 81.900 (3.2240 - 3.2244)	Blue
		2	81.901 - 81.910 (3.2244 - 3.2248)	Black

Item	Service Standard	Service Limit

CRANKSHAFT (CONT.)

Crankpin Wear	4HF1, 4HG1, 4HG1-T: 65.902 - 65.992 (2.5946 - 2.5954) 4HE1-T, 4HE1-TC: 72.920 - 72.922 (2.8709 - 2.8433)	65.85 (2.5925) 72.850 (2.8681)
Crankshaft Journal Bearing Spread mm (in)		87 (3.43)
Crankshaft End Play mm (in)	0.104 - 0.205 (0.0041 - 0.0081)	0.35 (0.014)
Crankshaft Run-Out mm (in)	0.05 (0.002) or less	0.3 (0.012)
Crankshaft Front and Rear Oil Seal and Slinger Wear		When there is an oil leak found, the oil seal and slinger must be replaced as a set. Insert it securely with a special tool.

PISTON

Piston and Cylinder Liner Clearance mm (in)	4HF1: 0.081 - 0.113 (0.0032 - 0.0044) 4HG1: 0.081 - 0.116 (0.0032 - 0.0044) 4HE1-T: 0.091 - 0.131 (0.0036 - 0.0052) 4HE1-TC: 0.091 - 0.131 (0.0036 - 0.0052)	
Piston Grade Selection mm (in) Remarks: Piston Grade Mark Position The piston grade marks (i.e. A, B, C) are stamped on the piston upper face. Piston Outside Diameter Measuring Position Take measurement of the Piston at the position 82mm (3.23 in) from the top in the direction of the longer diameter.	Piston Grade	

Engine model	Cylinder Liner Bore Diameter mm (in)	Piston Service Grade	Piston Outside Diameter mm (in)
4HF1 4HF1-2	112.041 - 112.060 (4.4111 - 4.4118)	-	111.947 - 111.960 (4.4074 - 4.4079)
4HG1 4HG1-T	115.040 - 115.060 (4.5291 - 4.5299)	-	114.944 - 114.959 (4.5253 - 4.5259)
4HE1-T 4HE1-TC	110.066 - 110.075 (4.3333 - 4.3337)	AX	109.944 - 109.959 (4.3285 - 4.3291)
		CX	109.960 - 109.975 (4.3291 - 4.3297)

Item	Service Standard		Service Limit

PISTON PIN

Piston Pin Wear mm (in)	4HF1 4HF1-2 4HG1 4HG1-T	35.995 - 36.000 (1.4171 - 1.4173)	35.970 (1.4161)
	4HE1-T 4HE1-TC	39.995 - 40.000 (1.5746 - 1.5748)	39.970 (1.5736)
Piston and Piston Pin Clearance mm (in)	0.004 - 0.017 (0.0002 - 0.0007) Clearance should be wide enough for the piston pin to be inserted under the condition where the piston is heated to the temperature of 80°C to 100°C (176°F to 212°F).		0.04 (0.0016) When an abnormal striking sound is heard, replace the piston and the piston pin.

PISTON RING

Piston Ring Gap (Inside the cylinder) mm (in)	4HF1 4HF1-2	1st Compression Ring	0.24 - 0.39 (0.0094 - 0.0153)	1.50 (0.0591)
		2nd Compression Ring	0.35 - 0.50 (0.0138 - 0.0197)	1.50 (0.0591)
		Oil Ring	0.02 - 0.40 (0.0008 - 0.0157)	1.50 (0.0591)
	4HG1 4HG1-T	1st Compression Ring	0.24 - 0.39 (0.0094 - 0.0153)	1.50 (0.0591)
		2nd Compression Ring	0.35 - 0.50 (0.0138 - 0.0197)	1.50 (0.0591)
		Oil Ring	0.15 - 0.35 (0.00591 - 0.0138)	1.50 (0.0591)
	4HE1-T	1st Compression Ring	0.24 - 0.40 (0.0094 - 0.0157)	1.50 (0.0591)
		2nd Compression Ring	0.56 - 0.71 (0.0220 - 0.0279)	1.50 (0.0591)
		Oil Ring	0.20 - 0.40 (0.0078 - 0.0157)	1.50 (0.0591)
	4HE1-TC	1st Compression Ring	0.24 - 0.40 (0.0094 - 0.0157)	1.50 (0.0591)
		2nd Compression Ring	0.30 - 0.40 (0.0118 - 0.0157)	1.50 (0.0591)
		3rd Compression Ring	0.30 - 0.40 (0.0118 - 0.0157)	1.50 (0.0591)
		Oil Ring	0.02 - 0.40 (0.0008 - 0.0157)	1.50 (0.0591)
Piston Ring & Piston Ring Groove Clearance mm (in)	4HF1 4HF1-2	1st Compression Ring	0.062 - 0.092 (0.0024 - 0.0036)	0.2 (0.0078)
		2nd Compression Ring	0.04 - 0.08 (0.0015 - 0.0031)	0.15 (0.0059)
		Oil Ring	0.02 - 0.06 (0.0008 - 0.0024)	0.15 (0.0059)
	4HG1 4HG1-T	1st Compression Ring	0.062 - 0.092 (0.0024 - 0.0036)	0.2 (0.0078)
		2nd Compression Ring	0.04 - 0.08 (0.0015 - 0.0031)	0.15 (0.0059)
		Oil Ring	0.02 - 0.06 (0.0008 - 0.0024)	0.15 (0.0059)
	4HE1-T	1st Compression Ring	0.09 - 0.13 (0.0035 - 0.0051)	0.2 (0.0078)
		2nd Compression Ring	0.09 - 0.13 (0.0035 - 0.0051)	0.2 (0.0078)
		Oil Ring	0.03 - 0.07 (0.0012 - 0.0028)	0.15 (0.0059)
	4HE1-TC	1st Compression Ring	0.09 - 0.13 (0.0035 - 0.0051)	0.2 (0.0078)
		2nd Compression Ring	0.09 - 0.13 (0.0035 - 0.0051)	0.2 (0.0078)
		3rd Compression Ring	0.09 - 0.13 (0.0035 - 0.0051)	0.2 (0.0078)
		Oil Ring	0.03 - 0.07 (0.0012 - 0.0028)	0.15 (0.0059)
The direction of the piston ring connecting end			Alternately at 180°. Don't position the connecting end in the side pressure direction. Place the connecting end of the oil ring and that of the expander coil at 180° alternately.	

Item	Service Standard	Service Limit

CONNECTING ROD

Connecting Rod Alignment mm (in)	Distortion	0.05 (0.002) or less	0.20 (0.008)
	Parallelism	0.05 (0.002) or less	0.20 (0.008)
Connecting Rod Small End Bushing and Piston Pin Clearance mm (in)		0.012 - 0.027 (0.0005 - 0.0011) There must be clearance enough to rotate the piston pin while holding it lightly with its large end fixed.	0.05 (0.002)
Connecting Rod Bearing Spread mm (in)			70 (2.77) or more
Connecting Rod Bearing and Crankpin Clearance mm (in)		0.036 - 0.077 (0.0014 - 0.0030)	0.10 (0.004)

Connecting Rod Bearing Selection mm (in)

Remarks:
The connecting rod big end inside diameter grade marks (A or B) are stamped on top of the cylinder number align marks of the big end.

• 4HF1 • 4HF1-2 • 4HG1 • 4HG1-T

Connecting Rod Big End		Crankpin	Big End Bearing Color Code
Grade Mark	(Reference) Inside Diameter	(Reference) Outside Diameter	
A	69.985 - 69.992 (2.7553 - 2.7556)	65.902 - 65.922 (2.5946 - 2.5954)	Green
B	69.993 - 70.000 (2.7556 - 2.7559)	65.902 - 65.922 (2.5946 - 2.5954)	Yellow

• 4HE1-T • 4HE1-TC

A	77.985 - 77.992 (3.0702 - 3.0705)	72.902 - 72.922 (2.8702 - 2.8709)	Green
B	77.993 - 78.000 (3.0706 - 3.0709)	72.902 - 72.922 (2.8702 - 2.8709)	Yellow

The difference in weight between the connecting rod and the piston when assembled. N (gr / lb)		0.2 (20 / 0.28)

FLYWHEEL

Flywheel Thickness mm (in)	31.4 - 31.6 (1.236 - 1.244) (Flywheel friction surface - crankshaft setting face)	31.0 (1.22)
Friction Surface Run-Out mm (in)		0.2 (0.008)
Friction Surface Roughness mm (in)	0.006 (0.0002) or less	
Ring Gear		The tooth face burr must be chamfered. Replace ones when damaged excessively.

Item	Service Standard	Service Limit

GEAR TRAIN

Timing Gear Backlash Gear to Gear (In the direction of a normal line) mm (in)	0.10 - 0.17 (0.0039 - 0.0067) Hold both the gear to be checked and the adjoining gear stationaly.	0.30 (0.012)
Crankshaft Gear and Crankshaft Interference mm (in)	0.03 - 0.093 (0.0012 - 0.0037)	
Camshaft Gear and Camshaft Interference mm (in)	0.015 - 0.023 (0.0006 - 0.0009)	
Idle Gear Shaft Wear mm (in)	29.959 - 29.980 (1.1795 - 1.1803)	29.80 (1.1732)
Idle Gear Bushing Wear mm (in)	30.000 - 30.021 (1.1811 - 1.1819)	30.1 (1.185)
Idle Gear Bushing and Idle Gear Shaft Clearance mm (in)	0.020 - 0.062 (0.0008 - 0.0024)	0.2 (0.008)
Idle Gear End Play mm (in)	0.058 - 0.115 (0.0002 - 0.005)	0.2 (0.008)

LUBRICATION SYSTEM

Oil Pump	Gear Teeth and Inner Wall Clearance mm (in)	0.125 - 0.220 (0.0049 - 0.0087)	0.3 (0.012)
	Gear and Pump Cover Clearance mm (in)	0.064 - 0.109 (0.0018 - 0.0043)	0.2 (0.008)
	Gear Shaft Wear mm (in)	15.989 - 16.000 (0.6295 - 0.6299)	15.9 (0.626)
	Gear Shaft and Bushing Clearance mm (in)	0.04 - 0.07 (0.0016 - 0.0028)	0.2 (0.012)
	Delivery Volume cc (cu•in)/rev	16.54 (1.0) Delivery Pressure: 392kPa (4 kg/cm^2 / 56.9 psi) Oil Temperature: 50 ± 2°C (122 ± 3.6°F) Oil Viscosity: SAE 30	
Relief Valve Opening Pressure kPa (kg/cm^2 / psi)	Oil Gallery	441.3 (4.5 / 64.0)	(Reference)
	Oil Pump	784.5 (8.0 / 113.8)	(Reference)

Item		Service Standard	Service Limit

COOLING SYSTEM

Water Pump	External appearance	Check the following: • Cracks and damages of the pump body • Cracks and corrosion of the impeller • Water leak from the seal unit When an abnormal condition is found, replace the water pump as an assembly.	
	Seal Unit	Push the fan center in the radial direction while rotating it and check the seal unit for any excessive play or abnormal sound. When there is any abnormal condition found, replace the water pump as an assembly.	
	Delivery Volume lit (US / UK gal) / min	200 or more Water Pump Speed: 3,300 rpm Water Temperature: 80 ± 2°C (176 ± 3.6°F)	
Fan Drive Belt Tension mm (in)		8 - 12 (0.31 - 0.47) … New belt 10 - 14 (0.39 - 0.55) … Reuse belt Depress the drive belt mid-portion with a 98N (10kg / 22lb) force	
Thermostat With Jiggle Valve	Valve Initial Opening Temperature °C (°F)	85 ± 1.5 (185 ± 2.7)	
	Valve Lift At 100°C (212°F) mm (in)	8 (0.31) or more	
Thermostat With-Out Jiggle Valve	Valve Initial Opening Temperature °C (°F)	Primary: 85 ± 2 (185 ± 3.6) Secondary: 82 ± 2 (179.6 ± 3.6)	
	Valve Lift At 95°C (203°F) mm (in)	8 (0.31) or more	
Radiator	External appearance	• Check the radiator for any corrosion, water leak, fin damage, or clogging. When there is any abnormal condition found, correct the radiator or replace it. • When deterioration, cracking or water leak is found in the rubber hose, replace the rubber hose.	
	Pressure Valve Opening Pressure kPa (kg /cm^2 / psi)	103.0 ± 14.7 (1.05 ± 0.15 / 14.9 ± 2.1)	
	Vacuum Valve Opening Pressure kPa (kg /cm^2 / psi)	M/T: 1.0 - 4.9 (0.01 - 0.05 / 0.14 - 0.71) A/T: 2.0 - 4.9 (0.02 - 0.05 / 0.28 - 0.71)	

Item		Service Standard	Service Limit

COOLING SYSTEM (CONT.)

Cooling Fan	Cooling Fan Pulley Speed rpm	M/T: 3,900 A/T: 3,850	Rotate the fan by hand, and when it doesn't rotate smoothly, or when there is oil leak from the fan clutch, replace the fan clutch.
	Cold Condition (Bi-metal lower than 40°C (104°F) rpm	M/T: 900 or lower A/T: 1,200 or lower	
	Hot Condition (Bi-metal higher than 70°C (158°F) rpm	M/T: 3,300 ± 150 A/T: 3,450 ± 150	
	Pulley Ratio (Crankshaft/Fan)	175 / 151	

FUEL SYSTEM

Fuel Feed Pump	Suction capacity	The suction must be completed in 25 times or less. Priming Pump Speed : 60 - 100 times/minute Pipe Inside Diameter : 8mm (0.31in) Suction Pipe Length : 2,000mm (78.7 in) Suction Height : 1,000mm (39.4in)	
Injection Nozzle	Needle Valve Seat Portion Oil Tight sec Time required for the pressure to fall from 16,180 kPa (165 kg /cm^2 / 2,346 psi) to 14,220 kPa (145 kPa (kg /cm^2 / 2,062 psi)	5 or more	
	Spray Condition	• The spray must be fine and uniform. • The injection must be directed in the center direction with no stray spray. • The spray from each nozzle hole must be uniform	

Item	Service Standard	Service Limit

ENGINE ELECTRICAL

Generator	Ball bearing			When it doesn't rotate smoothly or is giving out an abnormal sound, or when there is an oil leak from the seal, replace it.
	Slip Ring Diameter mm (in)		Nominal size 31.6 (1.244)	30.6
	Rotor	Coil Resistance Ω	Nominal resistance 12.6	When the resistance differs largely from the standard value, or when a poor insulation is found, replace it.
		Coil Insulation Resistance MΩ	1 or more (500 volt megger tester)	
	Stator	Coil Resistance Ω	Nominal resistance 0.17 (Between coil end and each coil end)	
		Coil Insulation Resistance MΩ	1 or more (500 volt megger tester)	
	Brush Length mm (in)		Nominal size 20 (0.79)	6 (0.24)
IC Voltage Regulator	Rectifier		The rectifier is normal when there is continuity with the tester ⊖ terminal connected to “B” (battery) terminal and the ⊕ terminal to the rectifier holder, and when there is no continuity with their connections reversed.	When there is continuity in both directions, or when there is no continuity in both directions, replace the rectifier.
	Battery Power V		<4HF1 / 4HF1-2 / 4HG1 / 4HG1-T> LR 250 - 504 (24V - 60A) LR 250 - 508B (24V - 50A) DENSO (12V - 35A) <4HE1-T / 4HE1-TC> LR 250 - 510 (24V - 50A) LR 180 - 510 (12V - 80A)	28 – 29 28 – 29 27.8 - 28.8 28 – 29 14.1 - 14.7
	Output Current A		1300rpm 2000rpm 4000rpm <4HF1 / 4HF1-2 / 4HG1 / 4HG1-T> LR 250 - 504 18 35 53 LR 250 - 508B 15 32 46 DENSO 12 18 37 <4HE1-T / 4HE1-TC> LR 250 - 510 15 32 43 LR 180 - 510 25 58 82	
	Pulley Ratio (Crankshaft/Generator)		175 / 82	

Item	Service Standard	Service Limit

ENGINE ELECTRICAL (CONT.)

Vacuum Pump	Pump Housing Inside Diameter mm (in)		60.0 - 60.1 (2.362) (4HF1•4HF1-2) (4HG1•4HG1-T)	(Reference)
	Vane Length mm (in)		14.2 - 15.2 (0.559 - 0.598) (4HF1•4HF1-2) (4HG1•4HG1-T)	(Reference)
	Performances Time required for the pressure to get to -66.7kPa (-500mmHg / -9.7psi).		1,000 rpm 13 sec or less 1,000 rpm 35 sec or less (LR 180 - 510 only) 5,000 rpm 4 sec or less 5,000 rpm 10 sec or less (LR 180 - 510 only) Oil Viscosity : SAE 30 Oil Temperature : 70 ± 5°C (158 ± 9°F) Oil Pressure : 441kPa (4.5 kg / cm^2 / 64psi) Tank Capacity : 7,000cc (427 cu•in)	
	Check Valve		• Apply 98 – 490 kPa (1-5 kg/cm^2 14-71 psi) compressd air to pump side of the check valve. • Check for air leakage from the check valve. • If there is air leakage, the check valve must be replaced.	
Starter	Commutator Run-Out mm (in)		0.05 (0.002) or less	0.2 (0.008)
	Commutator Outside Diameter mm (in)	M/T	36.5 (1.437)	35.5 (1.398)
		A/T	38.0 (1.496)	36.6 (1.441)
	Mica Segment Depth mm (in)		0.5 - 0.8 (0.020 - 0.031)	0.2 (0.008)
	Brush Length mm (in)	M/T	15.0 (0.591)	10.5 (0.413)
		A/T	18.0 (0.709)	11.0 (80.443)
	Brush Spring Tension N (kg / lb)	M/T	24.5 - 34.3 (2.5 - 3.5 / 5.5 - 7.7)	
		A/T	28.4 - 35.3 (2.9 - 3.6 / 6.4 - 7.9)	
	Load Characteristics Terminal Voltage V Load Current A Torque N•m (kg•m / lb•ft) Speed rpm		M/T: 18.55 A/T : 14.30 M/T: 250 A/T : 400 M/T: 14.2 (1.45 / 10.5) or more A/T : 28.4 (2.9 / 21.0) or more A/T : 1,500 M/T: 860	

	Terminal								
	ACC	B	ON	ST	B_1	P_1	P_2	W	W
LOCK					○	○			
ACC	○	○			○	○		○	○
ON	○	○	○		○		○		
START		○	○	○	○		○		

Item	Service Standard	Service Limit

ENGINE ELECTRICAL (CONT.)

Preheating system (QOSII)	Time required for the glow indicator to light up sec	3.5 After the key switch is turned to "ON" position without engine turned.	
	Time required for the source voltage to be supplied to the glow plug sec	18 After the key switch is turned to "ON" position without engine turned.	
	Glow Relay Coil Resistance Ω	Nominal resistance 51.5	
	Thermo Switch Operating Temperature °C (°F)	OFF → ON: 7 - 13 (44.6 - 55.4) ON → OFF: Less 3 (37.4)	
	Glow Plug Continuity		If no continuity exists, must be replaced.

SERVICING

Servicing refers to general maintenance procedures to be performed by qualified service personnel.

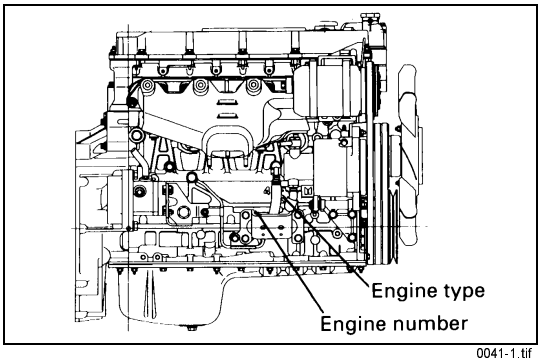

0041-1.tif

MODEL IDENTIFICATION

Engine Serial Number

The engine number is stamped on the front left hand side of the cylinder body.

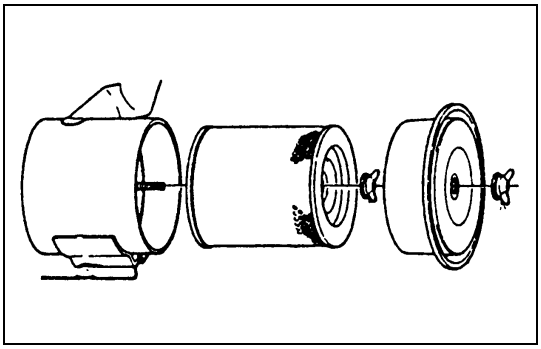

0041-2.tif

AIR CLEANER

Dry Type Washable Paper Element

Element cleaning procedures will vary according to the condition of the element.

0041-3.tif

Dust Fouled Element

Rotate the element with your hand while applying compressed air to the inside of the element. This will blow the dust free.

Compressed air pressure must not exceed 7 kg/cm^2 (99.6 psi/686 kPa)

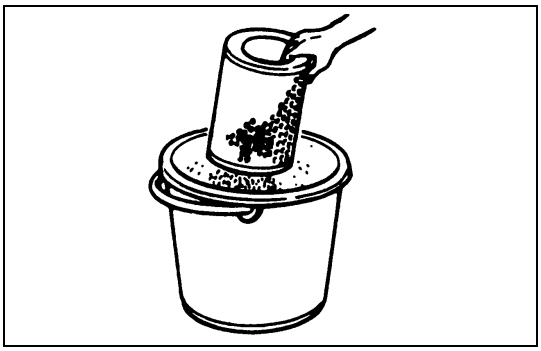

0041-4.tif

Carbon and Dust Fouled Element

1. Prepare a cleaning solution of Isuzu Genuine Element Cleaner (Donaldson D1400) diluted with water.
2. Immerse the element in the solution for twenty minutes.

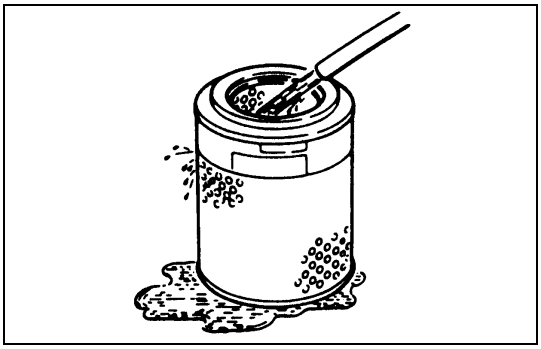

0042-1.tif

3. Remove the element from the solution and rinse it well with running water.
   Water pressure must not exceed 2.8 kg/cm^2 (39.8 psi/274kPa).

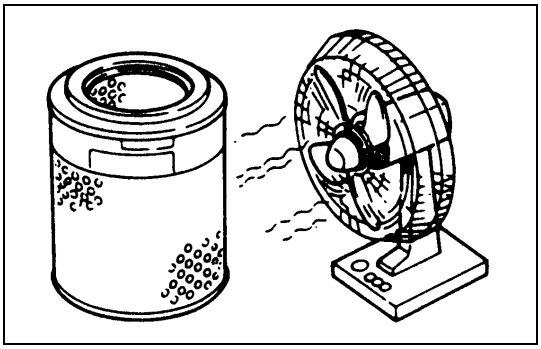

0042-2.tif

4. Dry the element in a well ventilated area.
   An electric fan will hasten drying.

CAUTION:

Do not use compressed air or an open flame to dry the element quickly. Damage to the element will result.

It will usually take two or three days for the element to dry completely. Therefore, it is a good idea to have a spare on hand to use in the interim.

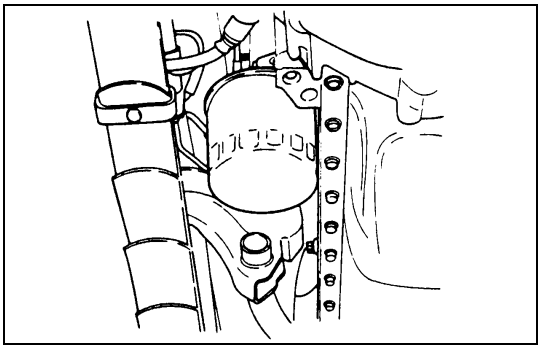

0042-3.tif

LUBRICATING SYSTEM

Main Oil Filter (Disposable Spin-On Cartridge Element)

Replacement Procedure

1. Loosen the used oil filter by turning it counterclockwise with the filter wrench.
   Filter Wrench: 1-85221-097-0
2. Clean the oil filter fitting face.
   This will allow the new oil filter to seat properly.
3. Apply a light coat of engine oil to the O-ring.
4. Turn in the new oil filter until the filter O-ring is fitted against the sealing face.
5. Use the filter wrench to turn in the filter an additional one full turn.

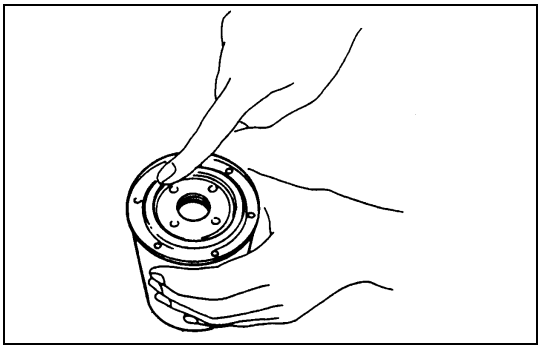

0042-4.tif

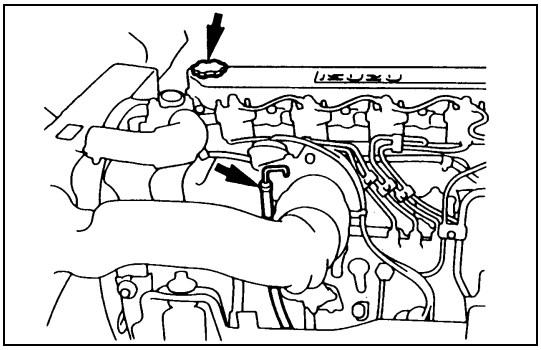

0042-5.tif

6. Check the engine oil level and replenish to the specified level if required.

Engine Oil Replenishment	lit (US/UK gal)
0.7 (0.19/0.15)	

7. Start the engine and check for oil leakage from the main oil filter.

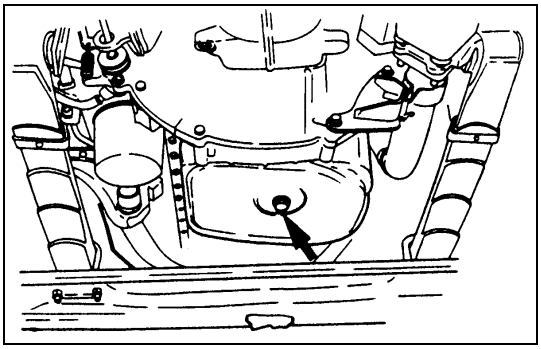

0043-1.tif

Engine Oil Replacement

Draining

1. Remove the drain plug to completely drain the engine oil. Do this while the engine is hot.
2. Replace the drain plug.
3. Tighten the drain plug to the specified torque.

Drain Plug Torque	N•m (kg•m/lb•ft)
78 (8.0/58)	

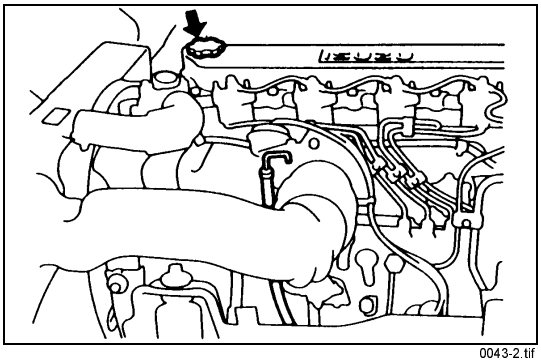

0043-2.tif

Replenishment

1. Remove the filler cap.
2. Pour the specified engine oil into the crankcase through the oil filler.
3. Replace the filler cap.

Crankcase and Filter Oil Capacity	lit (US/UK gal)
10.5 (2.8/2.3)	

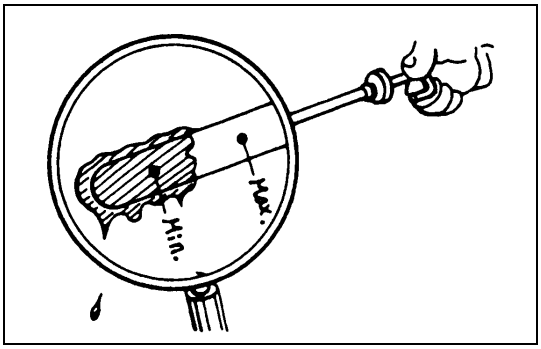

0043-3.tif

4. Start the engine and allow it to idle for a few minutes.
5. Stop the engine.
6. Use the dipstick to check the oil level.
   If the oil level is below the “MIN” line, add oil through the oil filler.
   If the oil level is above the “MAX” line, drain off the excess oil through the drain plug.

FUEL SYSTEM

Fuel Filter

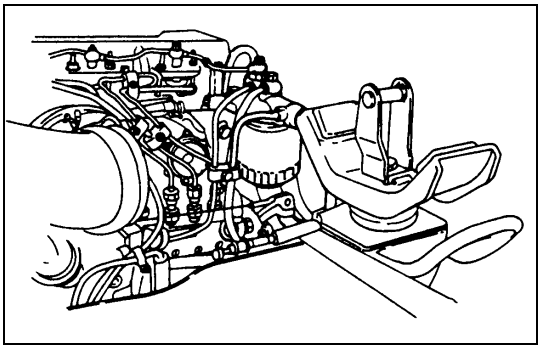

0043-4.tif

Replacement Procedure

1. Loosen the used fuel filter by turning it counterclockwise with the universal filter wrench.

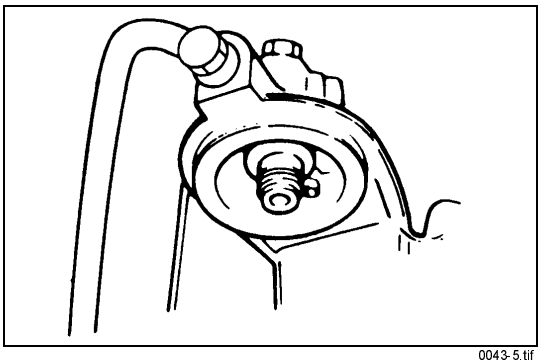

0043-5.tif

2. Clean the upper cover fitting face.
   This will allow the new fuel filter to seat properly.

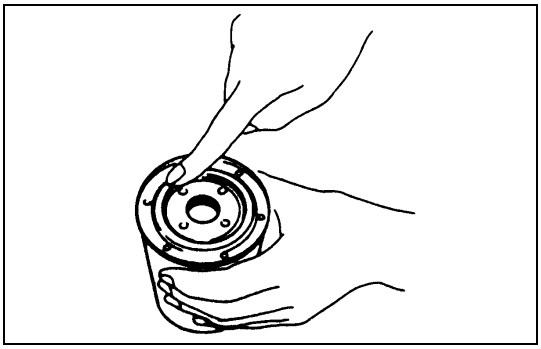

0046-1.tif

3. Apply a light coat of engine oil to the O-ring.
4. Supply fuel to the new fuel filter to facilitate bleeding.
5. Turn in the new fuel filter until the filter O-ring is fitted against the sealing face.
   Be very careful to avoid fuel spillage.
6. Use the filter wrench to turn in the fuel filter an additional 1/3 to 2/3 of a turn.

7. Operate the priming pump to bleed the air from the fuel line.

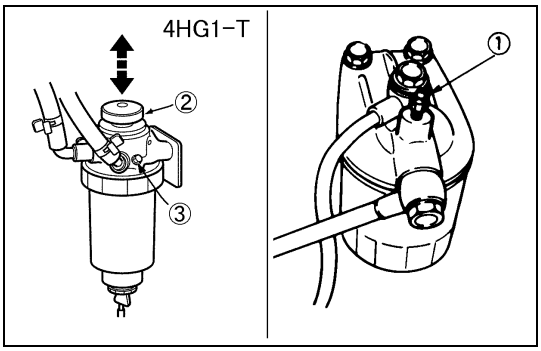

0046-2-1.tif

Bleeding the Fuel System

- Loosen the priming pump cap ②.
- Loosen the air bleeding plug; ③.
  (4HG1-T model only)
- Operate the priming pump.
  Pump the primer pump until fuel flow is free of air bubbles.
  (Except 4HG1-T model)
- Tighten the air bleeding plug ③.
  (4HG1-T model only)
- Loosen the bleeding plug ①.
- Operate the priming pump.
  Pump the primer pump until fuel flow is free of air bubbles.
- Tighten the bleeder plug ①.
- Operate the priming pump.
  Pump the primer pump until fuel flow is free of air bubbles.
  (Except 4HE1-TC model)
- Loosen the bleeding plug on the injection pump ④.
  (4HE1-TC model only)
- Operate the priming pump.
  Pump the primer pump until fuel flow is free of air bubbles.
  (4HE1-TC model only)
- Tighten the bleeding plug on the injection pump ④.
  (4HE1-TC model only)
- Lock the priming pump cap ②.

NOTE:
Check for fuel leakage from around the injection pump and the fuel filter.

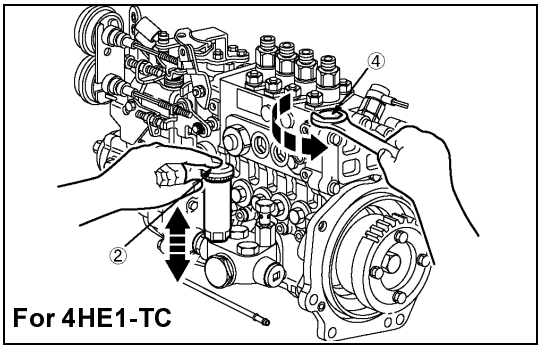

080LW001-1.tif

8. Start the engine.
   Crank the engine for ten seconds or until it starts.
   If the engine does not start after ten seconds, repeat Step 7.

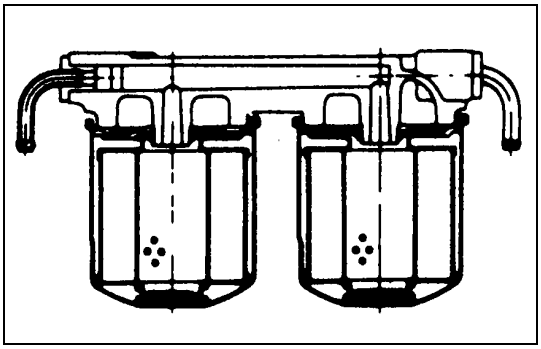
0046-4.tif

Sub Fuel Filter (Dual Type)

Replacement Procedure

1. Loosen the fuel filters by turning them counterclockwise with the universal filter wrench.
2. Clean the upper cover fitting faces.
   This will allow the new fuel filters to seat properly.

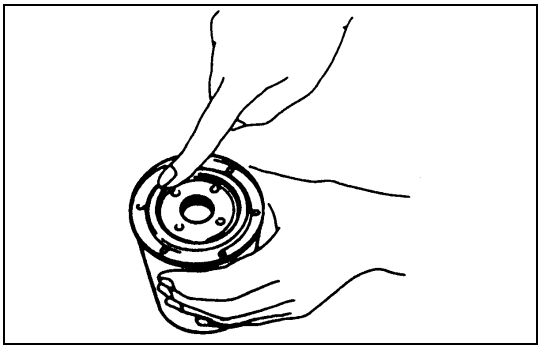
0045-1.tif

3. Apply a thin coat of engine oil to the O-rings.
4. Install the filter assemblies.
   Carefully turn each assembly clockwise until the O-ring is fitted against the filter cover sealing face.
5. Use the filter wrench to turn in each filter assembly an additional 1/3 to 2/3 of turn.
6. Operate the priming pump on the fuel filter to bleed the fuel system.
   Refer to “AIR BLEEDING” for more detailed information.

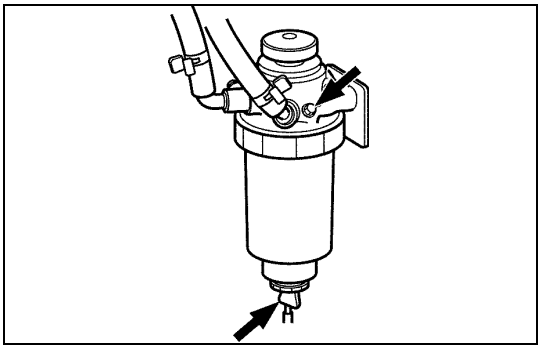
041LX001.tif

Pre-fuel Filter Water Draining Procedure

The indicator light will come on when the water level in the water separator exceeds the specified level.

Drain the water and foreign material from the water separator with the following procedure.

1. Place the end of a vinyl hose (beneath the drain plug) in a container.
2. Loosen the air intake plug and drain plug, then drain water.

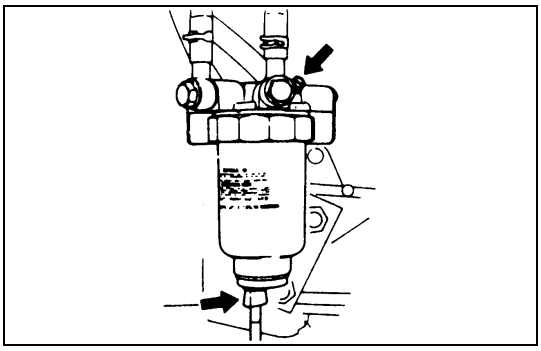
0045-2.tif

3. After draining, securely tighten the drain plug and air intake plug.
4. Then, operate the priming pump on the injection pump to bleed the fuel system.
5. After starting the engine, check to see that no fuel leaks from the drain plug.

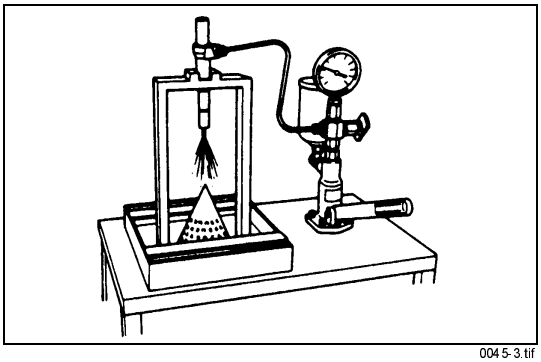

0045-3.tif

Injection Nozzle

Pressure and Spray Condition Check

1. Use a nozzle tester to check the injection nozzle opening pressure.
   If the opening pressure is above or below the specified value, the injection nozzle must be replaced or adjusted.
   Refer to “Adjustment.”

Injection Nozzle Opening Pressure Mpa (kg/cm^2/psi)

4HF1/4HF1-2/4HG1	18.14 (185/2,631)
4HE1-TC	21.57 (220/3,128)
4HG1-T	1st 18.1 (185/2,631) 2nd 21.1 (215/3,057)
4HE1-T	1st 17.65 (180/2,560) 2nd 21.57 (220/3,128)

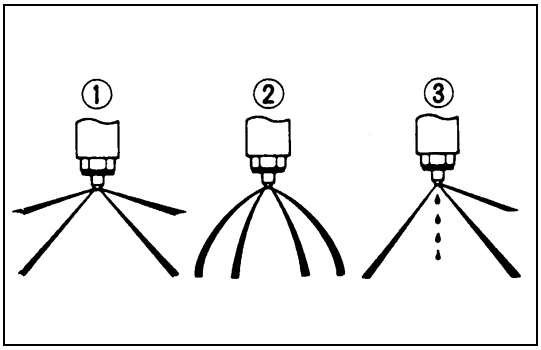

0046-1.tif

2. Check the spray condition.
   Refer to the illustration.
   Spray Condition
   ① Correct
   ② Incorrect (Restrictions in orifice)
   ③ Incorrect (Dripping)
   If the spray condition is bad, the injection nozzle must be replaced or adjusted.
   Refer to “6C FUEL SYSTEM”.

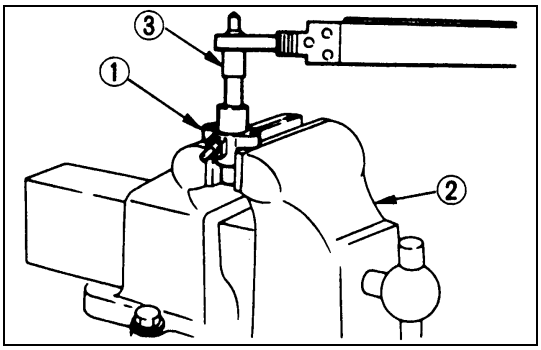

0046-2.tif

Adjustment

1. Clamp the injection nozzle holder ① in a vise ②.
2. Use a wrench to remove the injection nozzle retaining nut ③.

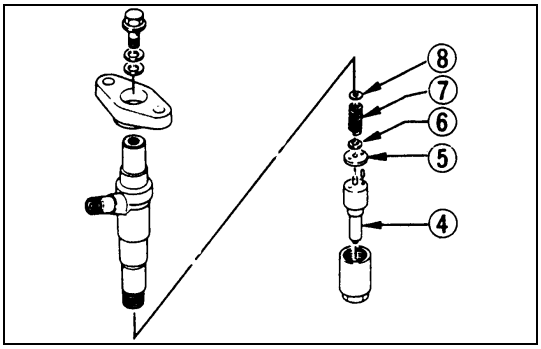

0046-3.tif

3. Remove the injection nozzle holder from the vise.
4. Remove the injection nozzle ④, the spacer ⑤, the spring seat ⑥ the spring ⑦ and the adjusting shim ⑧.
5. Install the new adjusting shim, the spring, the spring seat, the spacer, the injection nozzle, and the retaining nut.
6. Clamp the injection nozzle holder in the vise.
7. Tighten the injection nozzle holder retaining nut to the specified torque.

Injection Nozzle Holder Retaining Nut Torque	N•m (kg•m/lb•ft)
34 (3.5/25)	

8. Remove the injection nozzle holder from the vise.
9. Attach the injection nozzle holder to the injection nozzle tester.
10. Apply pressure to the nozzle tester to check that the injection nozzle opens at the specified pressure.

    If the injection nozzle does not open at the specified pressure, install or remove the appropriate number or adjusting shims to adjust it.

    Removing or installing one shim will increase or decrease the nozzle opening pressure approximately 3.77 kg/cm^2 (53.6 psi/370kPa).

Adjusting Shim Availability	mm (in)
Range	0.5 - 1.5 (0.02 - 0.06)
Increment	0.025 (0.001)
Total Number of Shims	41

Air Bleeding (Except 4HF1-2 model only)

Above works refer to “FUEL SYSTEM” in this section.

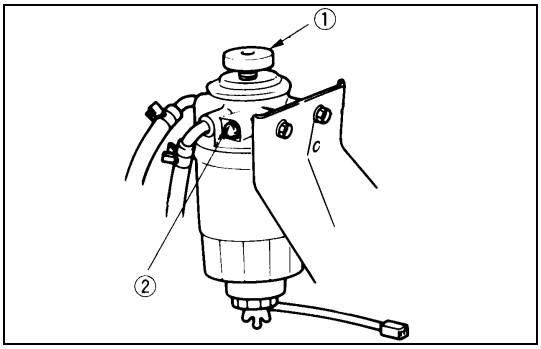

0047-3.tif

Air Bleeding (4HF1-2 model only)

1. Actuate the priming pump ① to send the air in the fuel system to the injection pump.
2. Loosen the sedimenter air bleeding plug ② and operate the priming pump until no bubbles appear.
3. Tighten the air bleeding plug completely.
4. Try to start the engine. If the engine is not started within 10 seconds, air bleeding should be conducted once agian.
5. Check that there is no fuel leak ,and then tighten the priming pump completely.

Water Drain

If more water than specified has collected, the warning light is lit. Under this condition, follow the following water drain procedure:

1. Place a container (Approximately 0.2 liters capacity) beneath the drain plug on the separator.
2. Loosen the drain plug and air bleeding plug.
3. After draining, tighten the drain plug.
4. Operate the priming pump several times again and check for fuel leak.
5. Tighten the air bleeding plug.
6. Make sure that the warning light in the instrument panel is off. (Except 4HE1-TC model)

COOLING SYSTEM

Coolant Level

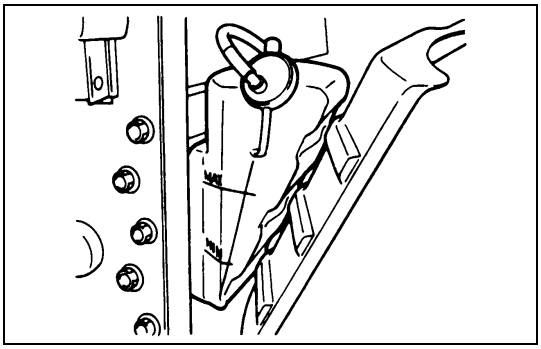

0048-1.tif

Check the coolant level and replenish the radiator reserve tank if necessary.

If the coolant level falls below the “MIN” line, carefully check the cooling system for leakage. Then add enough coolant to bring the level up to the “MAX” line.

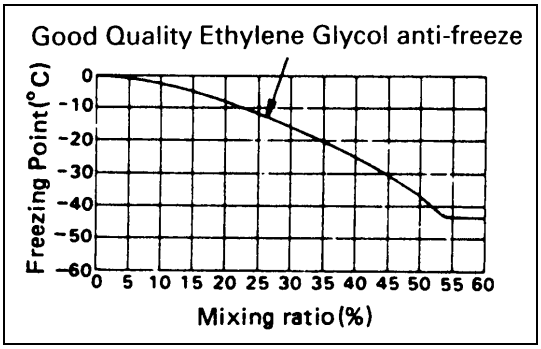

0048-2.tif

NOTE:

Do not overfill the reserve tank.

Remove the radiator filler cap only when absolutely necessary.

Always check the coolant level when the engine is cold.

Always refer to the chart at the left to determine the correct cooling water to antifreeze solution mixing ratio.

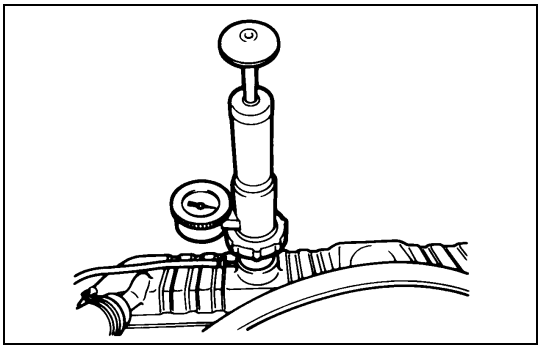

0048-3.tif

Cooling System Leakage Inspection

Clog up the reserver tank hose carefully and check the cooling system for leakage with a radiator cap tester by applying an air pressure of 196 kPa (2 kg/cm^2/28 psi) from filler neck to inside the radiator.

As the radiator upper tank is provided with a valve, the pressure fails to rise higher than the valve opening pressure unless the hose is clogged up.

Radiator Valve Inspection

Apply air pressure from filler neck using radiator cap tester and check the opening pressure of radiator valve. If the valve opening pressure is out of the standard value range, replace with a new radiator valve.

Radiator valve opening pressure	kPa (kg/cm^2/psi)
93 - 123 (0.95 - 1.25/13.5 - 17.8)	

Remove the radiator valve and check a negative pressure valve as the center of the valve seat side. If the negative pressure valve does not work smoothly, clean or replace the radiator valve.

Radiator valve fixing torque	N•m (kg•m/lb•ft)
6 (0.6/4)	

Conduct cooling system leakage check after reinstalling the radiator valve.

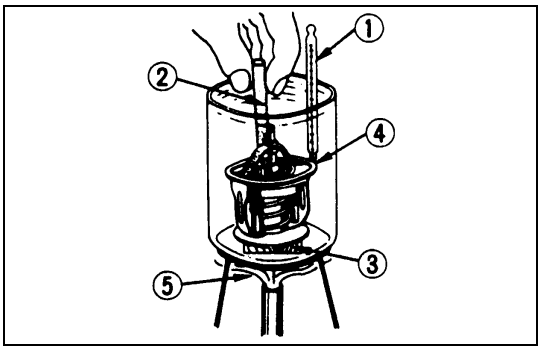

0049-1.tif

Thermostat Operating Test

1. Completely submerge the thermostat in water.
2. Heat the water.
   Stir the water constantly to avoid direct heat being applied to the thermostat.
3. Check the valve initial opening temperature.

Valve Initial Opening Temperature °C (°F)

		Standard
without jiggle valve	Primary valve	83 - 87 (181 - 189)
	Secondary valve	80 - 84 (176 - 183)
with jiggle valve		83.5 - 86.5 (182 - 188)

4. Check the valve lift full opening temperature.

Valve Lift Full Opening Temperature °C (°F)

	Standard
without jiggle valve	95 (203)
with jiggle valve	100 (212)

① Thermometer
② Aditating rod
③ Wooden piece
④ Thermostat
⑤ Heat

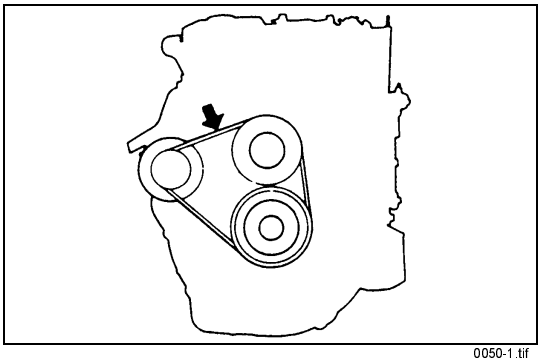
0050-1.tif

Fan Belt

Check the drive belt tension.

Depress the drive belt mid-portion with a 98 N (10 kg/22 lb) force.

Drive Belt Deflection	mm (in)
8 - 12 (0.31 - 0.47) ... New belt	
10 - 14 (0.39 - 0.55) ... Reuse belt	

Check the drive belt for cracking and other damage.

- Crankshaft damper pulley
- Generator pulley
- Cooling fan pulley

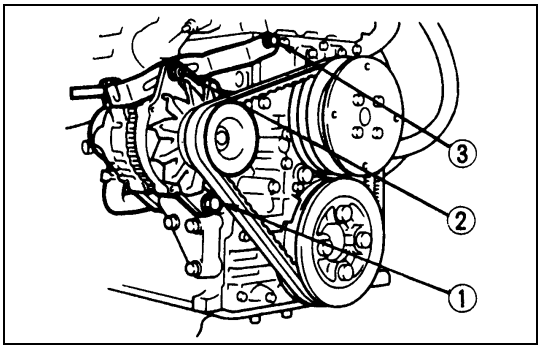

0050-2.tif

Fan Belt Adjustment

Fan belt tension is adjusted by moving the generator.

Torque	N•m (kg•m/lb•ft)
①	40 (4.1/30)
②	24 (2.4/17)
③	46 (4.7/34)

If equipped with A/C compressor, loosen the A/C drive belt tension pulley adjust bolt and lock nut. Then free the A/C drive belt. When finishing the fan belt adjustment, adjust the A/C drive belt and check the belt tension.

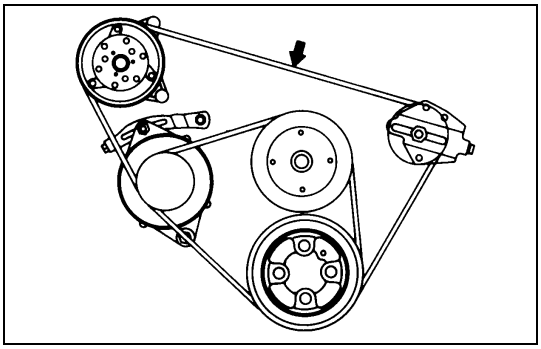
0050-3.tif

Air Conditioning (A/C) Compressor Drive Belt

Check the drive belt tension.

- Depress the drive belt mid-portion with a 98 N (10 kg/22 lb) force.

Drive Belt Deflection	mm (in)
16 - 20 (0.63 - 0.79) ... New belt	
18 - 22 (0.71 - 0.87) ... Reuse belt	

Check the drive belt for cracking and other damage.

A/C compressor drive belt tension is adjusted by moving the tension pulley.

When finishing the fan drive belt, then adjust the A/C drive belt.

Locking Nut Torque	N•m (kg•m/lb•ft)
27 (2.8/20)	

① A/C compressor pulley
② Tension pulley
③ Generator pulley
④ Crankshaft damper pulley
⑤ Tension pulley lock nut

ENGINE CONTROL

Idling Speed Inspection

1. Set the vehicle parking brake and chock the drive wheels.
2. Place the transmission in neutral.
3. Start the engine and allow it to warm up.
4. Check that the idling control knob is in the engine idling position.
5. Set a tachometer to the engine.
6. Check the engine idling speed.
   Engine idling speed should be as below.

Engine Idling Speed		rpm
(M/T)	550 ~ 600	
(A/T)	640 ~ 690	

If the engine idling speed is outside the specified range, it must be adjusted.

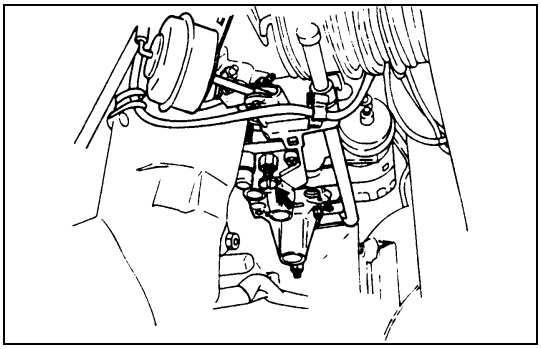

0051-1.tif

Idling Speed Adjustment

1. Loosen the idling set bolt lock nut on the injection pump.
2. Adjust the idling speed with the idling set bolt.
3. Tighten the lock nut.

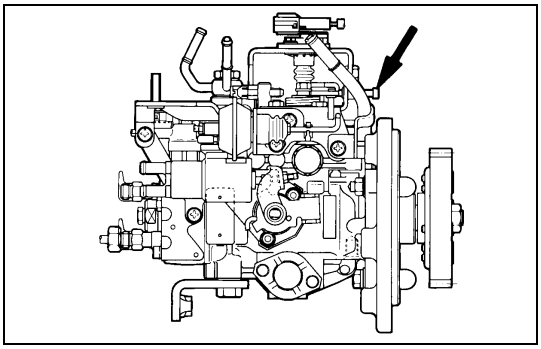

0051-2.tif

Idling Speed Check & Adjustment (4HF1-2 model only)

1. Warm up the engine.
2. Measure idling speed by means of tachometer.
3. If idling speed is out of the standard, adjust with an idling adjust bolt (indicated by an arrow mark).
   Idling speed: 575 - 625 rpm

ACCELERATOR CONTROL

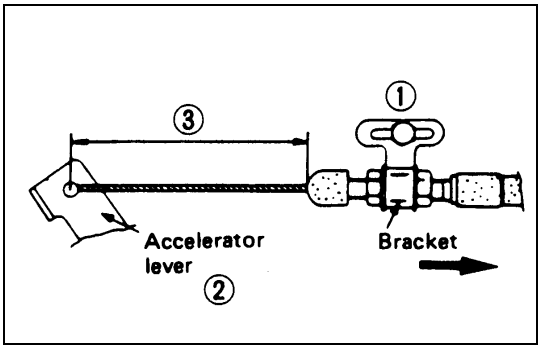

0051-3.tif

Accelerator Control Cable Adjustment

1. Loosen the accelerator cable clamp bolt ①.
2. Check that the idling control knob is in the engine idling position.
3. Hold the accelerator lever ② in the fully closed position and stretch the control cable ③ in the direction indicated by the arrow to remove any slack.

ENGINE STOP CONTROL

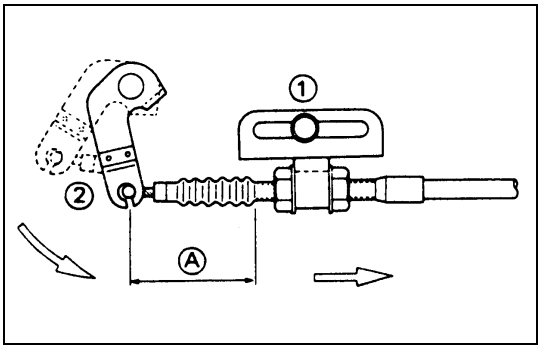

0052-1.tif

Adjustment

1. Check that the key switch is either in the “LOCK” position or removed from the engine.
2. Loosen the bolt ①.
3. Pull the fuel cut lever ② as far as possible and hold it.
4. Remove cable slackness Ⓐ by pulling the cable in the direction of the arrow in the illustration.
5. Tighten the bolt ①.

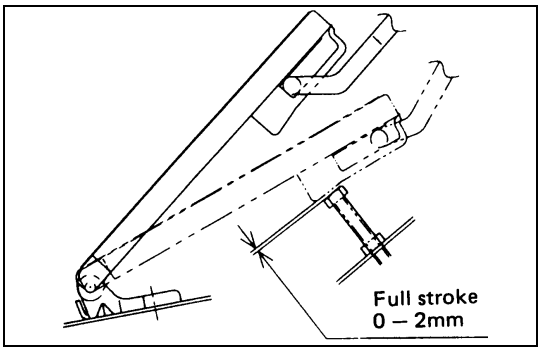

0052-2.tif

Accelerator Pedal Adjustment

1. Press the accelerator pedal to the floorboard and hold it.
2. Use the stopper bolt ④ to adjust the clearance between the stopper bolt end and the accelerator pedal ⑤ lower face.

Accelerator Pedal Clearance	mm (in)
0 - 2 (0 - 0.079)	

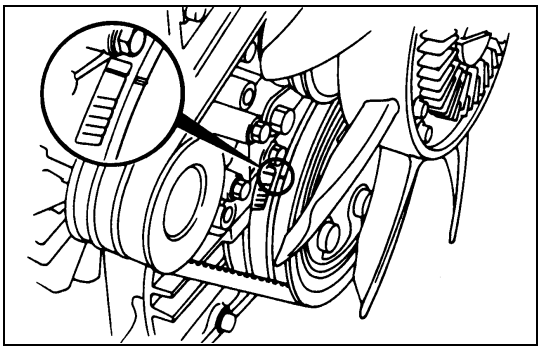
0052-3.tif

VALVE CLEARANCE ADJUSTMENT

1. Bring the piston in either the No.1 cylinder or the No.4 cylinder to TDC on the compression stroke by turning the crankshaft until the crankshaft damper pulley timing mark is aligned with the TDC notched line.

Note:

If there are two marks on the crank pulley, the front side of mark is for setting BTDC 49° and the rear side of mark is for setting TDC.

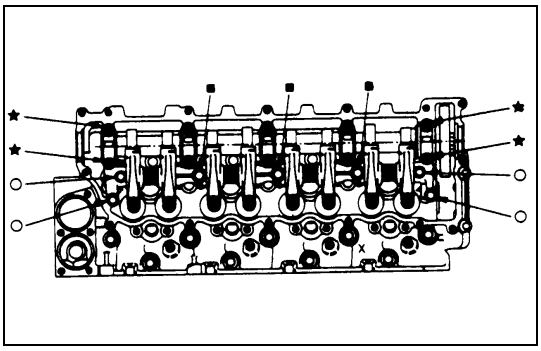
0052-4.tif

2. Tighten the rocker arm shaft bracket nuts and bolts to the specified torque in numerical order a little at a time as shown in the illustration.

Rocker Arm Shaft Bracket Nut and Bolt Torque	N•m (kg•m/lb•ft)
★ Nut	27(2.8/20)
■ Bolt	56(5.7/41)
○ Bolt	27(2.8/20)

- Apply engine oil to the threaded portion of the nuts marked with “★” and the bolts with “■” shown in the illustration left, and then tighten them to the specified torque.

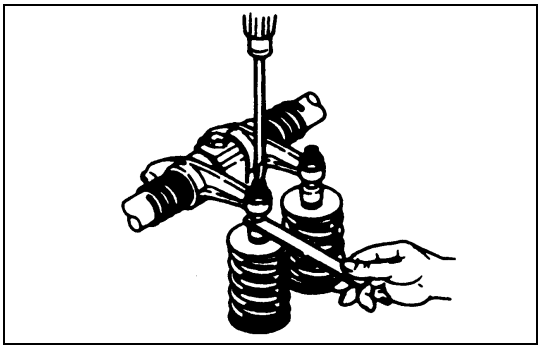

0053-1.tif

3. Check for play in the No.1 intake and exhaust valve rocker arms.

   If the No.1 cylinder intake and exhaust valve rocker arms have play, the No.1 piston is at TDC on the compression stroke.

   If the No.1 cylinder intake and exhaust valve rocker arms are depressed, the No.4 piston is at TDC on the compression stroke.

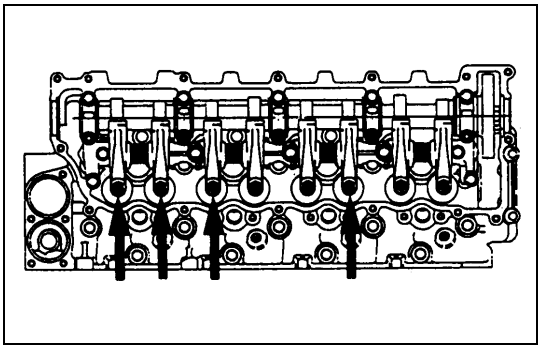

0053-2.tif

Adjust the No.1 or the No.4 cylinder valve clearance while their respective cylinders are at TDC on the compression stroke.

Valve Clearance	mm (in)
At cold	0.40 (0.016)

4. Loosen each valve clearance adjusting screw as shown in the illustration.
5. Insert a feeler gauge of the appropriate thickness between the rocker arm and the valve stem end.
6. Turn the valve clearance adjusting screw until a slight drag can be felt on the feeler gauge.
7. Tighten the lock nut securely.
8. Rotate the crankshaft 360 degrees.
9. Realign the crankshaft damper pulley timing mark with the TDC notched line.
10. Adjust the clearance for the remaining valves as shown in the illustration.

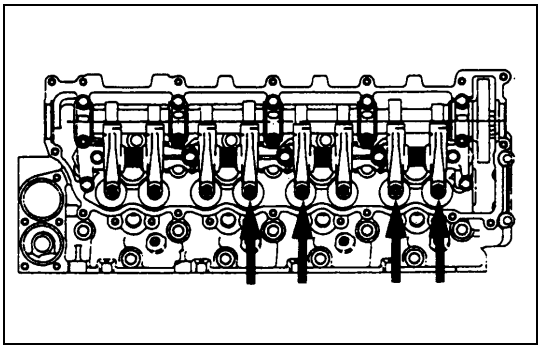

0053-3.tif

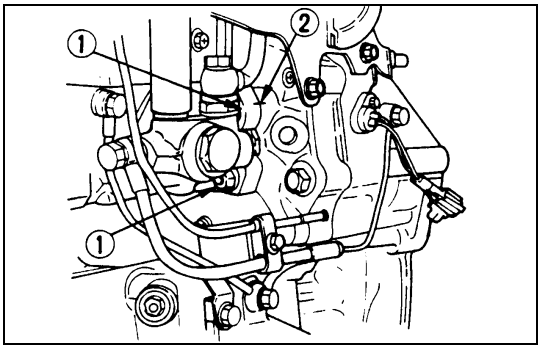

0053-4.tif

INJECTION TIMING ADJUSTMENT

Injection Pump Notched Line Inspection

1. Check the injection pump bracket nuts ① for looseness.

   Tighten as required.
2. Check that the notched lines on the injection pump bracket and the timing gear case are aligned.

   If the notched lines are not aligned, the injection timing must be checked.
3. Some time, check injection timing on the crank damper pulley.

   If the injection timing aligned with in correct, the injection timing must be readjusted.

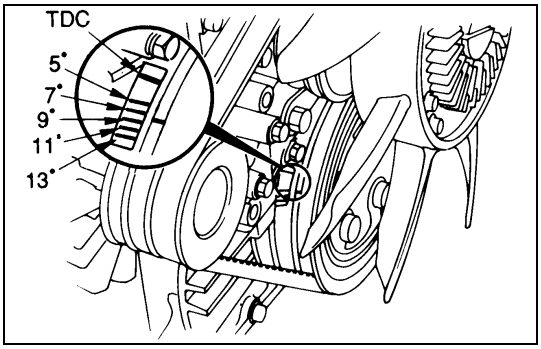

0054-1.tif

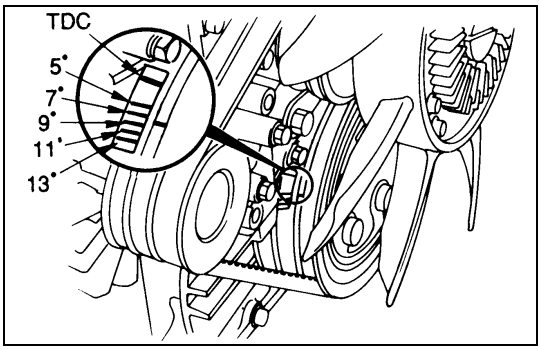

0054-2.tif

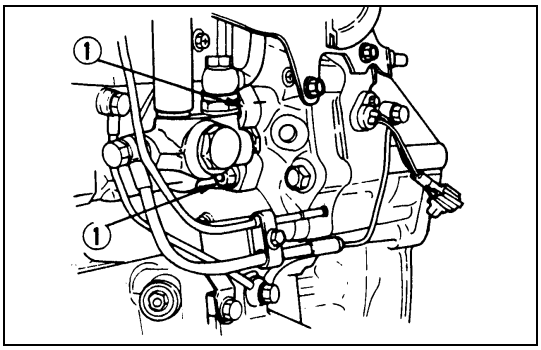

0054-3.tif

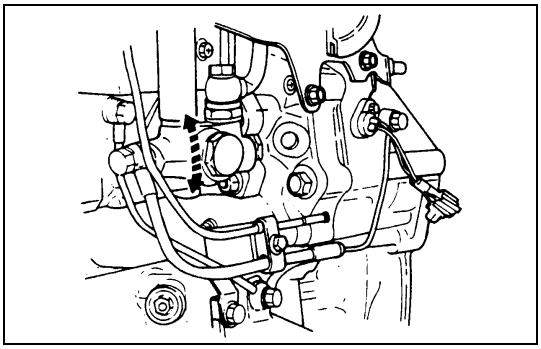
0054-4.tif

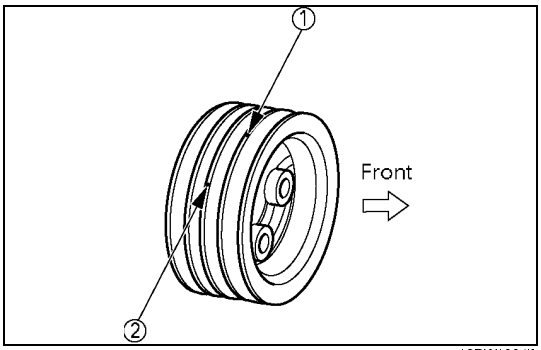

12RW133.tif

Injection Timing Adjustment

1. Turn the crankshaft until the timing mark on the crankshaft damper pulley is aligned with the BTDC (injection timing of each engine model) mark in the illustration.

Injection Timing	deg
4HF1: 4HEI-TC	BTDC 8
4HG1	BTDC 9
4HG1-T	BTDC 7 (Except Colombia) BTDC 9 (For Colombia)
4HEI-T	BTDC 7

2. Remove the two foam rubbers.
3. Loosen the four injection pump fixing nuts.
   This will allow the pump to pivot.
   Do not bend or scratch the fuel pipe.
4. Align the notched line between the injection pump bracket and the timing gear case.
   Make sure that the timing mark on the crank damper pulley is aligned with correct injection timing.

Note:

In case the crank pulley has two marks as illustrated, ① BTDC 49° mark on the second crest and ② TDC mark on the third crest (as viewed from the front side), be sure to set at the mark ②. (If there are two different marks on one and same crest, set at the mark which comes second when rotated in the normal direction.)

The mark ① is used when installing the injection pump for 4HF1-2.

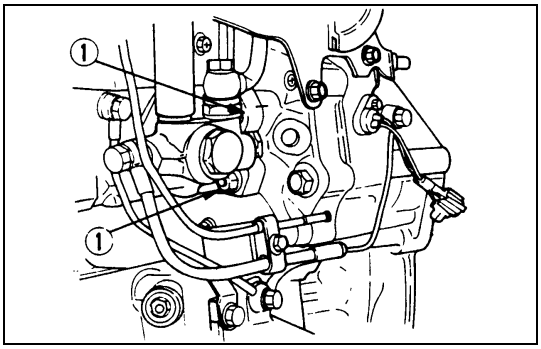

0055-1.tif

5. Tighten the injection pump fixing nuts to the specified torque.

Injection Pump Fixing Nut Torque	N•m (kg•m/lb•ft)
25 (2.6/19)	

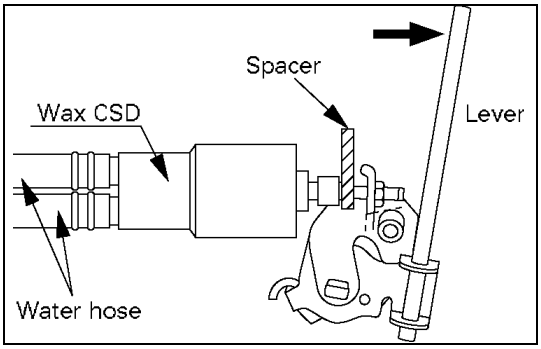

080LX001.tif

Injection Timing Check (4HF1-2 model only)

1. Set No. 1 Cylinder to the TDC in the compression stroke.
2. Disconnect Injection Pipe.
3. Put down Wax CSD lever, insert a spacer (10 - 20 mm/0.39 - 0.47 in) thick between the plunger and adjust bolt, and cancel the Wax CSD.

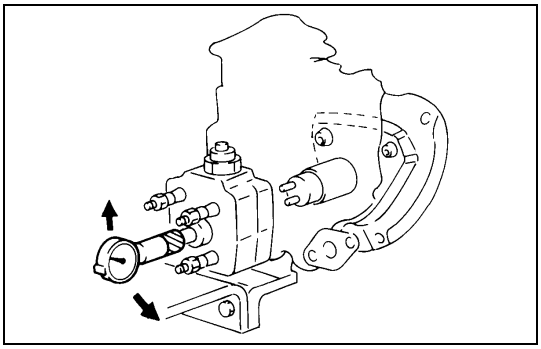
0055-3.tif

4. Remove the pump rear plug, connect a dial gage and set the lift at 1 mm (0.039 in).
   Special Tool
   Measuring device: 5-8840-0145-0

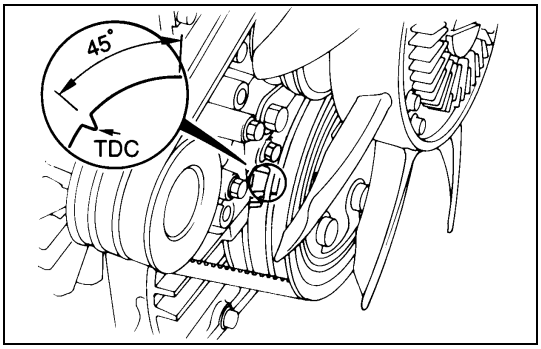

0055-4.tif

5. Set the crankshaft damper pulley TDC mark to the pointer or 45° before TDC.
6. Set the dial gage to the “0” position.
7. Turn the crankshaft leftwise and rightwise a little and make sure that the needle stays in the “0” position.

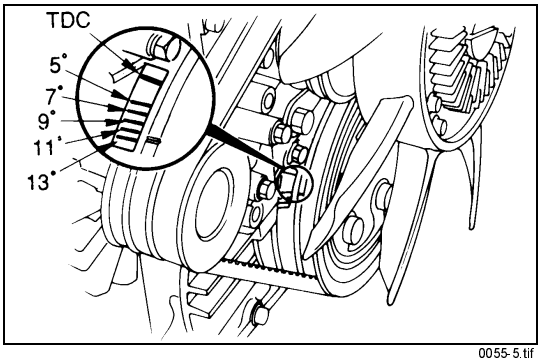

0055-5.tif

8. Turn the crankshaft in the normal direction and read the measuring device’s indication at the 12° before TDC position.

NOTE:

As there is no 12° mark, set midway between the 11° and 13° marks.

Standard value: 0.5 mm (0.0197 in)

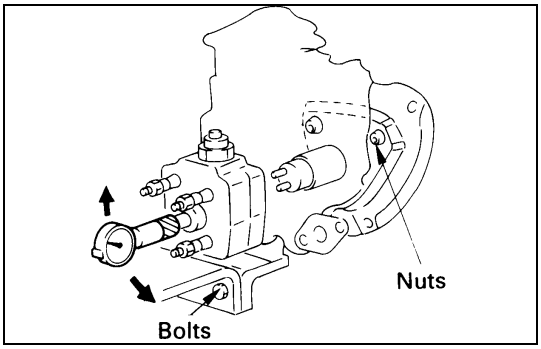

0056-1.tif

Injection Timing Adjustment (4HF1-2 model only)

If injection timing is out of the specified range, follow the following procedure for adjustment:

1. Loosen injection pump fiixng nuts and bracket bolt.
2. Adjust the mounting angle of injection pump:
   - If injection timing is too fast, bring the injection pump closer to the engine.
   - If injection timing is too slow, put the injection pump more distant from the engine.
3. When the dial gage has indicated the specified value, tighten the fixing nuts and bolt to specified torque:

Nut Tightening Torque	N•m (kg•m/lb•ft)
24 (2.4/17)	

Bolt Tightening Torque	N•m (kg•m/lb•ft)
48 (4.9/35)	

4. Disconnect the dial gage, install and tighten the plug to specified torque. (Make sure of a copper washer being attached to the plug)

Plug Tightening Torque	N•m (kg•m/lb•ft)
17 (1.7/12)	

5. Release the wax CSD and connect the injection pipe.

Pipe Sleeve Nut Tightening Torque	N•m (kg•m/lb•ft)
29 (3.0/22)	

COMPRESSION PRESSURE MEASUREMENT

1. Start the engine and allow it to warm up.
   Engine Coolant Temperature: Above 80°C (176°F)
2. Stop the engine.
3. Remove the following parts.
   - Glow plugs.
   - In case VE pump;
     Fuel cut solenoid connector.
   - In case line pump;
     Number 17 fuel in fuse box.

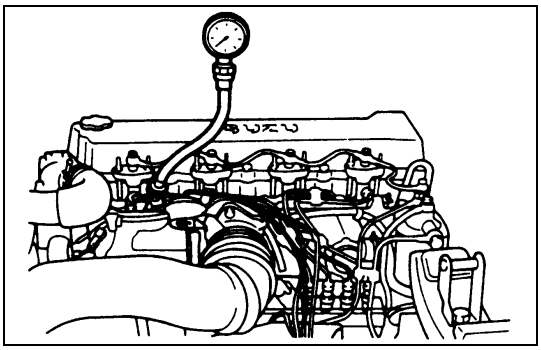

0057-1.tif

4. Set the adapter and the compression gauge to the No.1 cylinder glow plug hole.
   Compression Gauge (With Adapter): 5-8840-2675-0
   Adapter: 5-8531-7001-0
5. Connect a tachometer and check that engine cranking speed is 200 rpm or higher.
6. Turn the engine over with the starter motor and take the compression gauge reading.
7. Repeat the procedure (steps 4,5 and 6) for the remaining cylinders.

Compression Pressure	kPa (kg/cm^2/psi) at 200 rpm
Standard	More than 2,942 (30/426)
Limit for use	2,157(22/312)
Variance in pressure between cylinders	Less than 294 (3/43)

If the measured valve is less than the specified limit, above works refer to “TROUBLESHOOTING” Section in this manual.

QUICK-ON-START II SYSTEM

Inspection Procedure

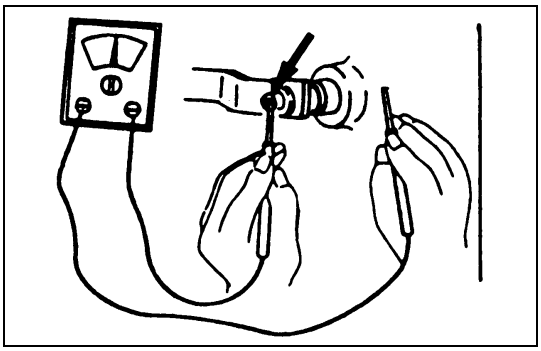

0057-2.tif

1. Disconnect the thermoswitch connection on the thermostat outlet pipe.
2. Turn the key switch to the “ON” position.
   If the Quick-ON-Start II system is operating properly, the flow relay will make a clicking sound within three seconds.
3. Measure the glow plug terminal voltage with a circuit tester as soon as possible after turning the key switch to the “ON” position.
4. Check the glow plug heating time.

Approximate Glow Plug Heating Time	sec

FIXING TORQUE

CYLINDER HEAD, HEAD GASKET AND HEAD COVER N•m (kg•m/lb•ft)

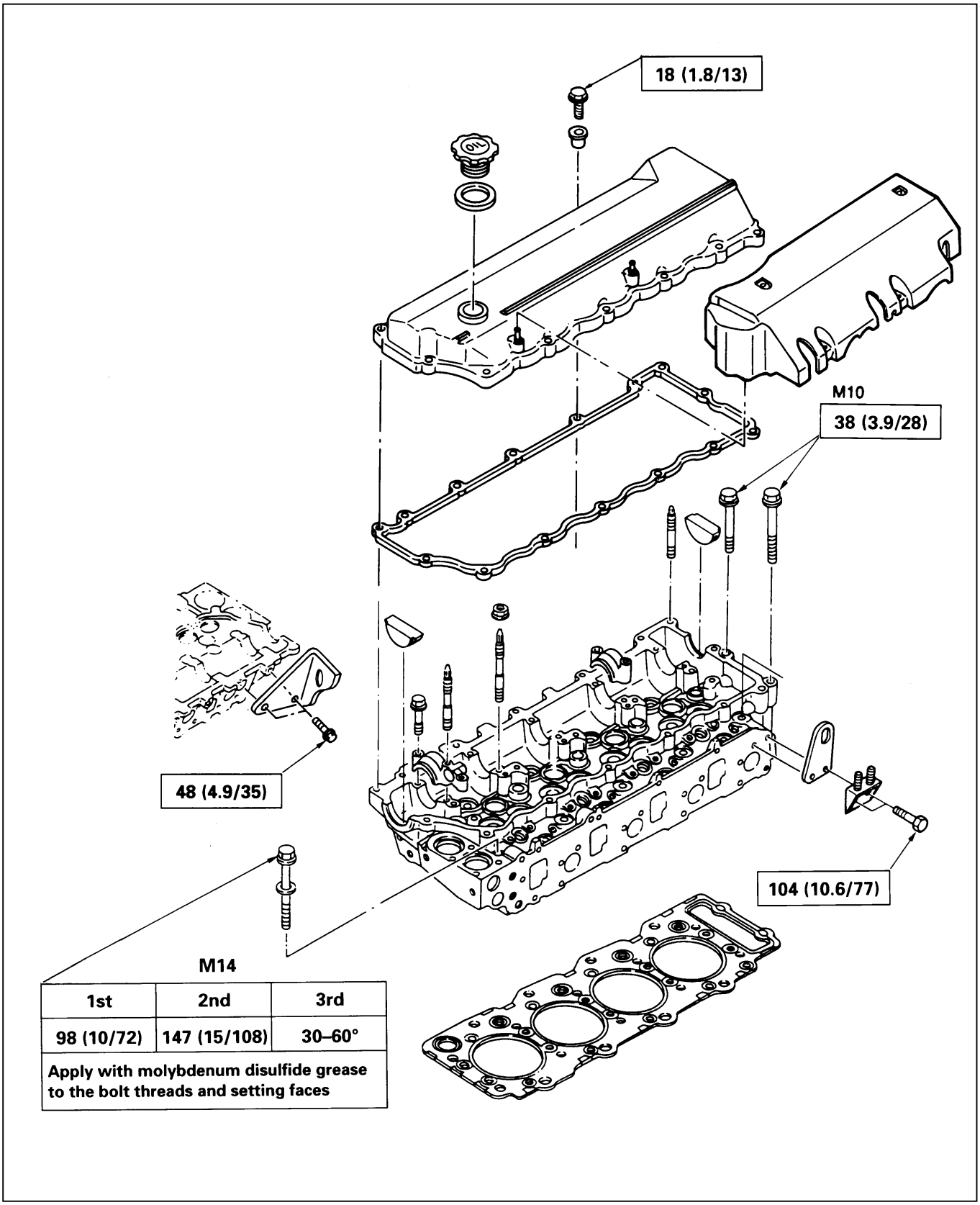

1st	2nd	3rd
98 (10/72)	147 (15/108)	30–60°
Apply with molybdenum disulfide grease to the bolt threads and setting faces		

0058-1.tif

CYLINDER HEAD, HEAD GASKET AND HEAD COVER N•m (kg•m/lb•ft)

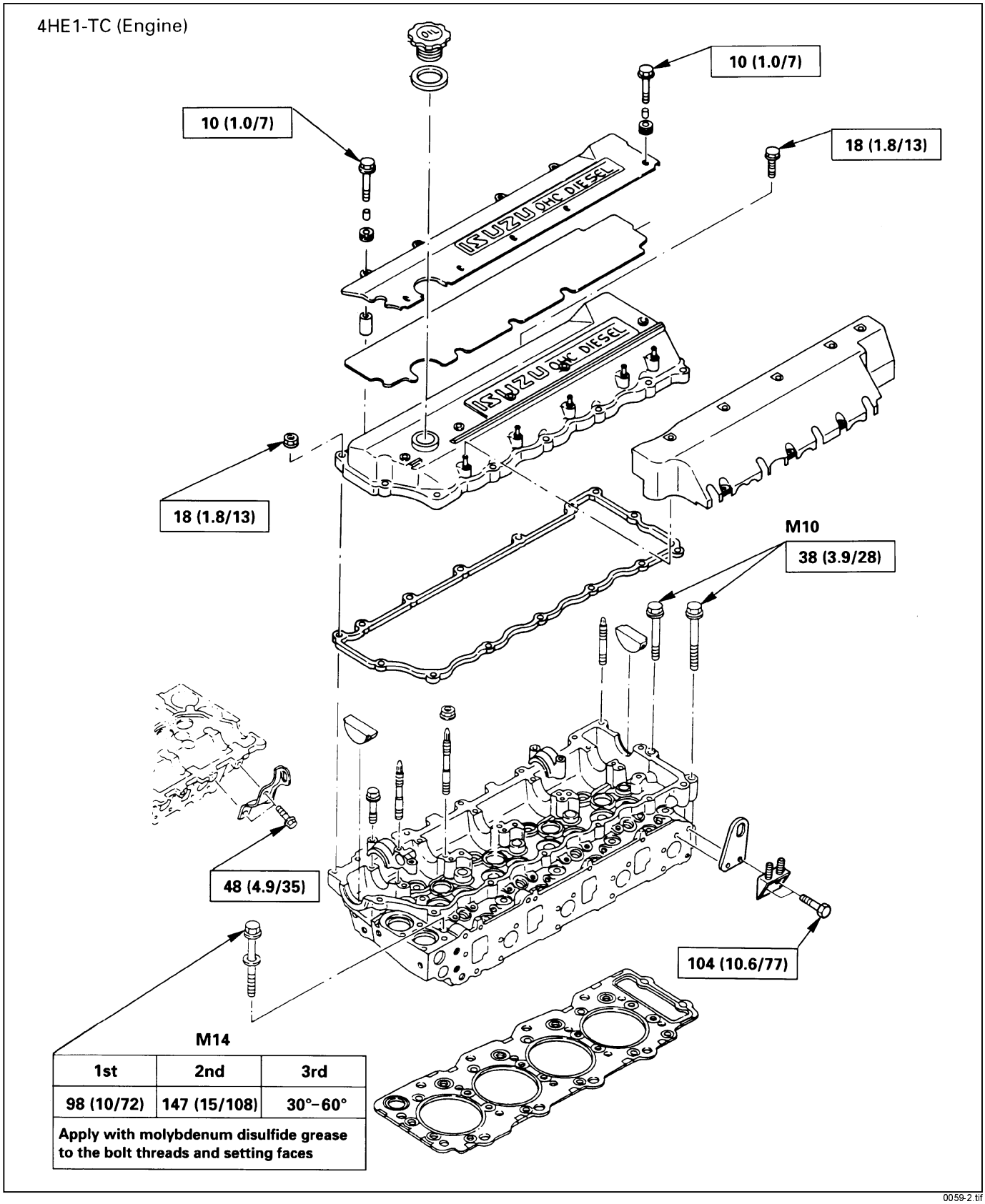

CRANKSHAFT, FLYWHEEL, DAMPER PULLEY, CONNECTING ROD AND OIL PAN

N•m (kg•m/lb•ft)

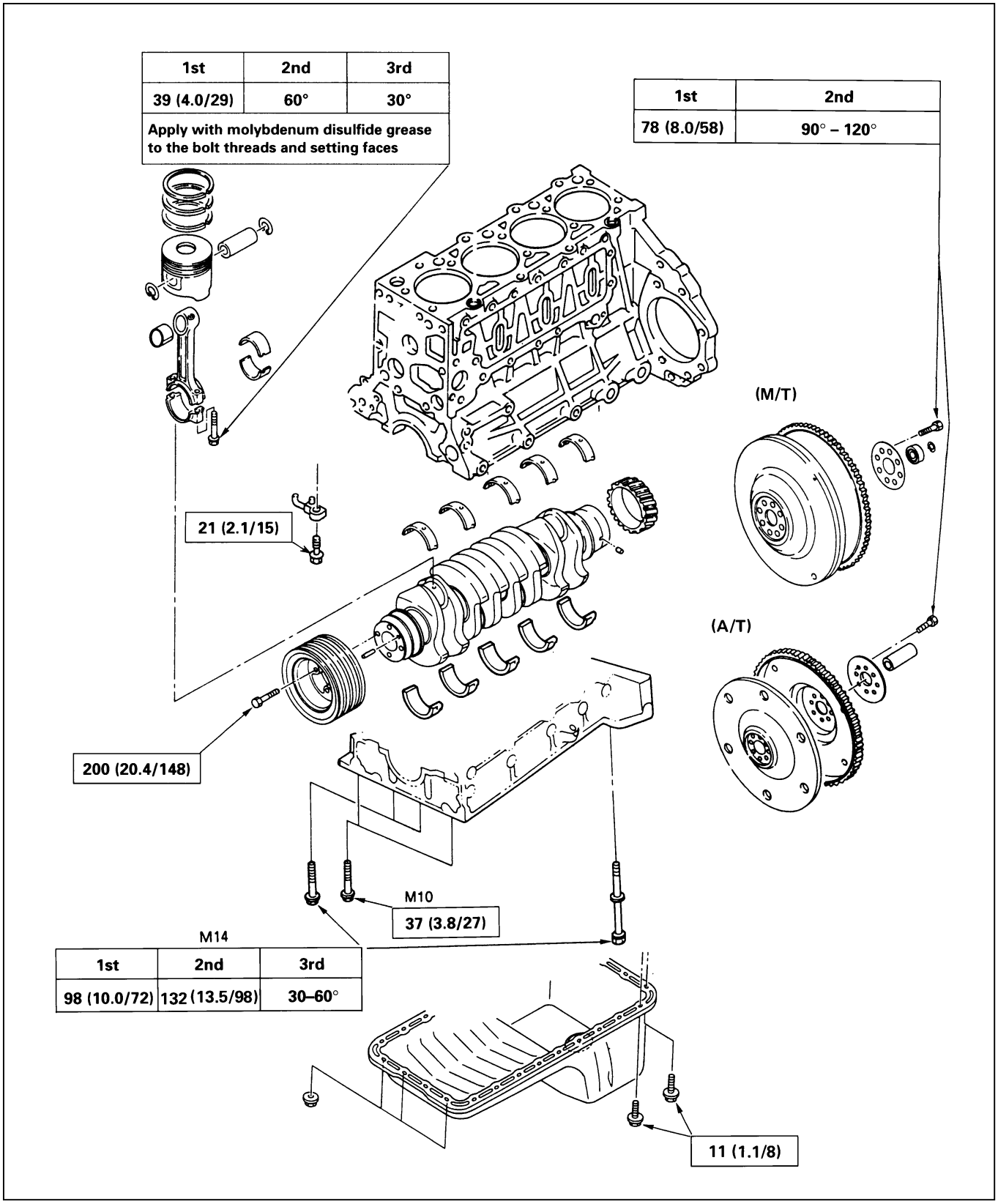

0060-1.tif

GEAR TRAIN, CAMSHAFT, ROCKER ARM SHAFT, FRONT RETAINER, FLYWHEEL HOUSING

N•m (kg•m/lb•ft)

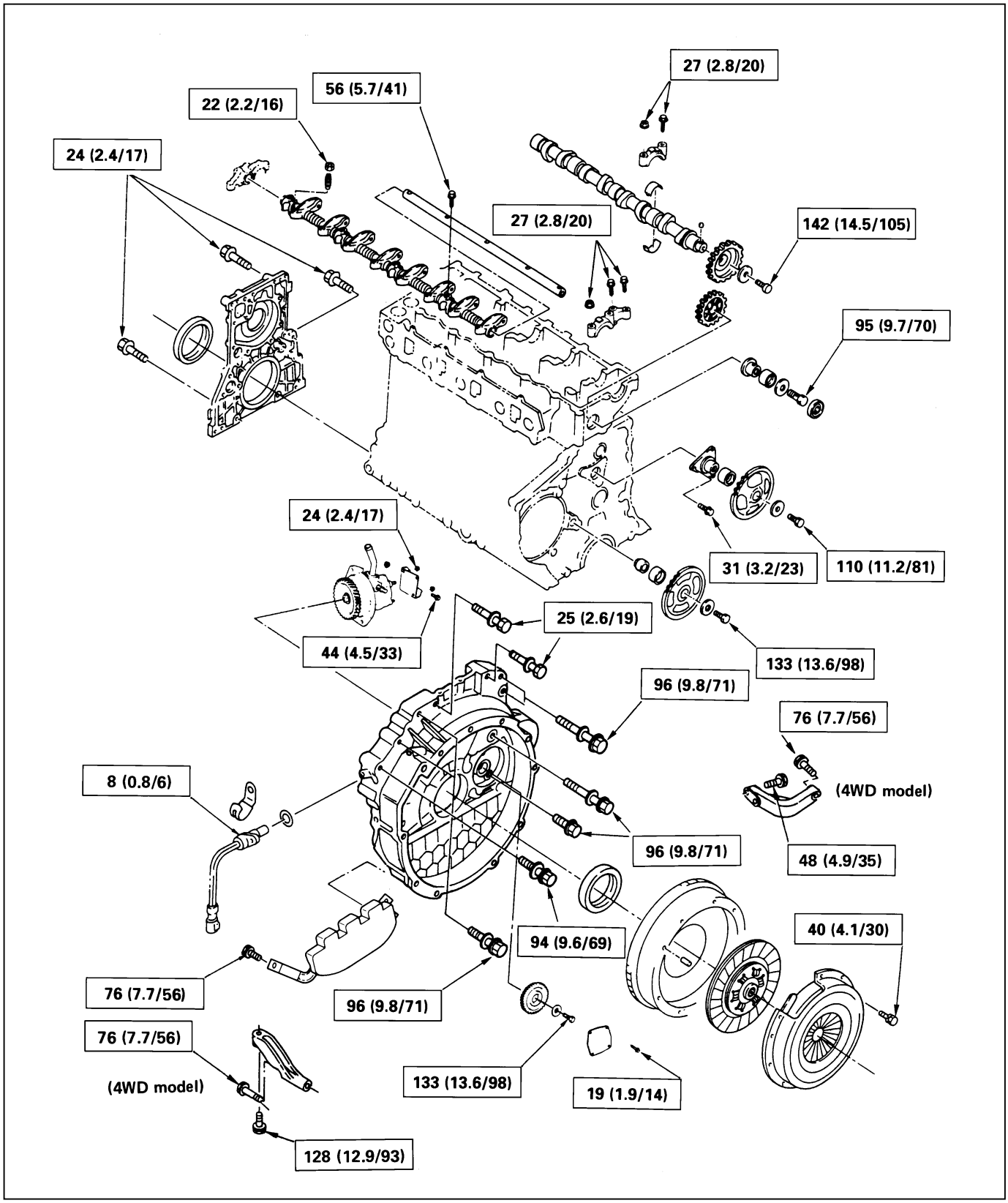

0061-1.tif

INLET COVER AND EXHAUST MANIFOLD

N•m (kg•m/lb•ft)

4HF1 / 4HG1 Engine

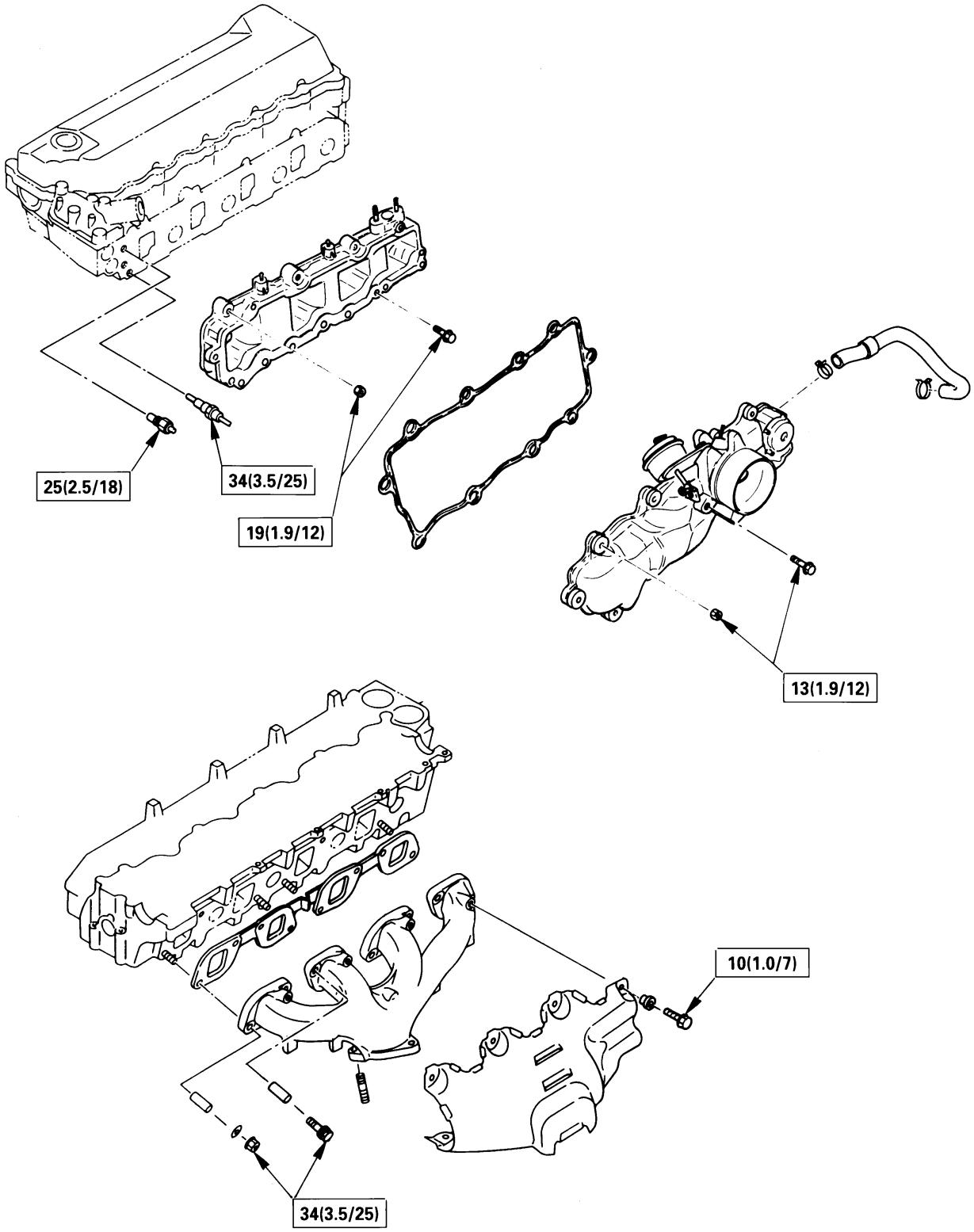

0062-1.tif

INLET COVER AND EXHAUST MANIFOLD

N•m (kg•m/lb•ft)

4HE1-T / 4HE1-TC Engine

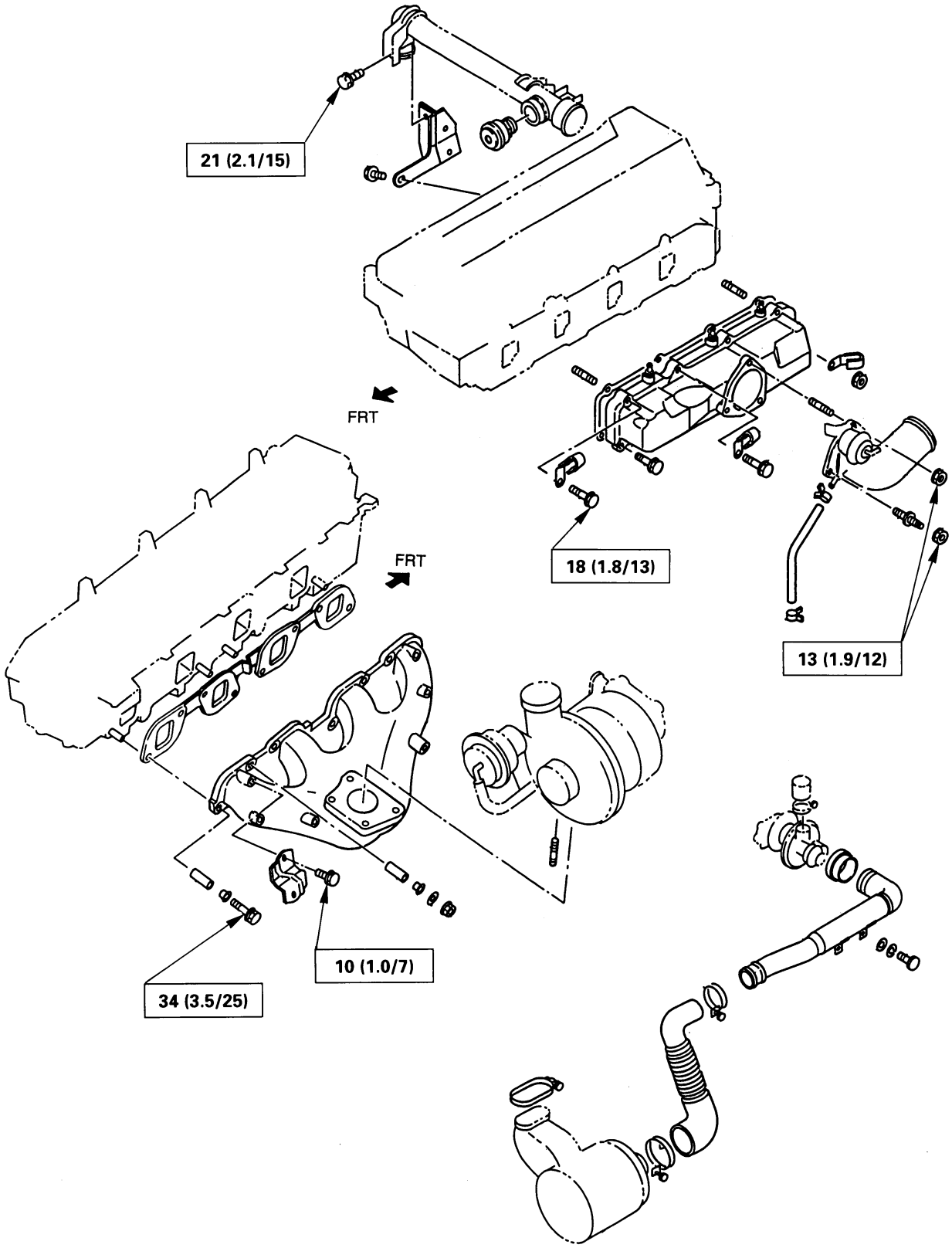

0063-1.tif

TURBOCHARGER, WATER PIPE AND OIL PIPE

N•m (kg•m/lb•ft)

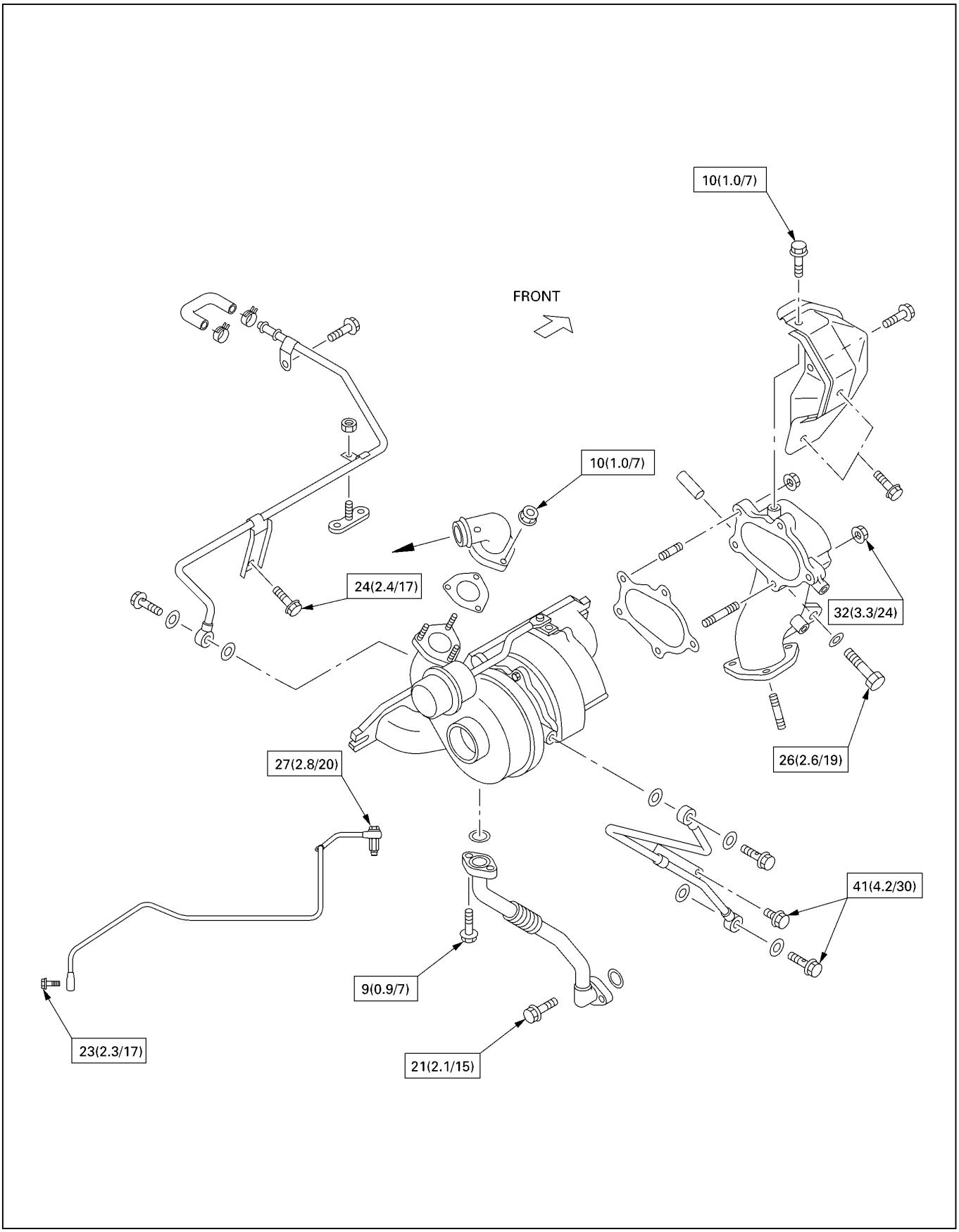

036LX007.tif

WATER PUMP, WATER OUTLET PIPE, OIL PUMP, OIL COOLER AND OIL FILTER

N•m (kg•m/lb•ft)

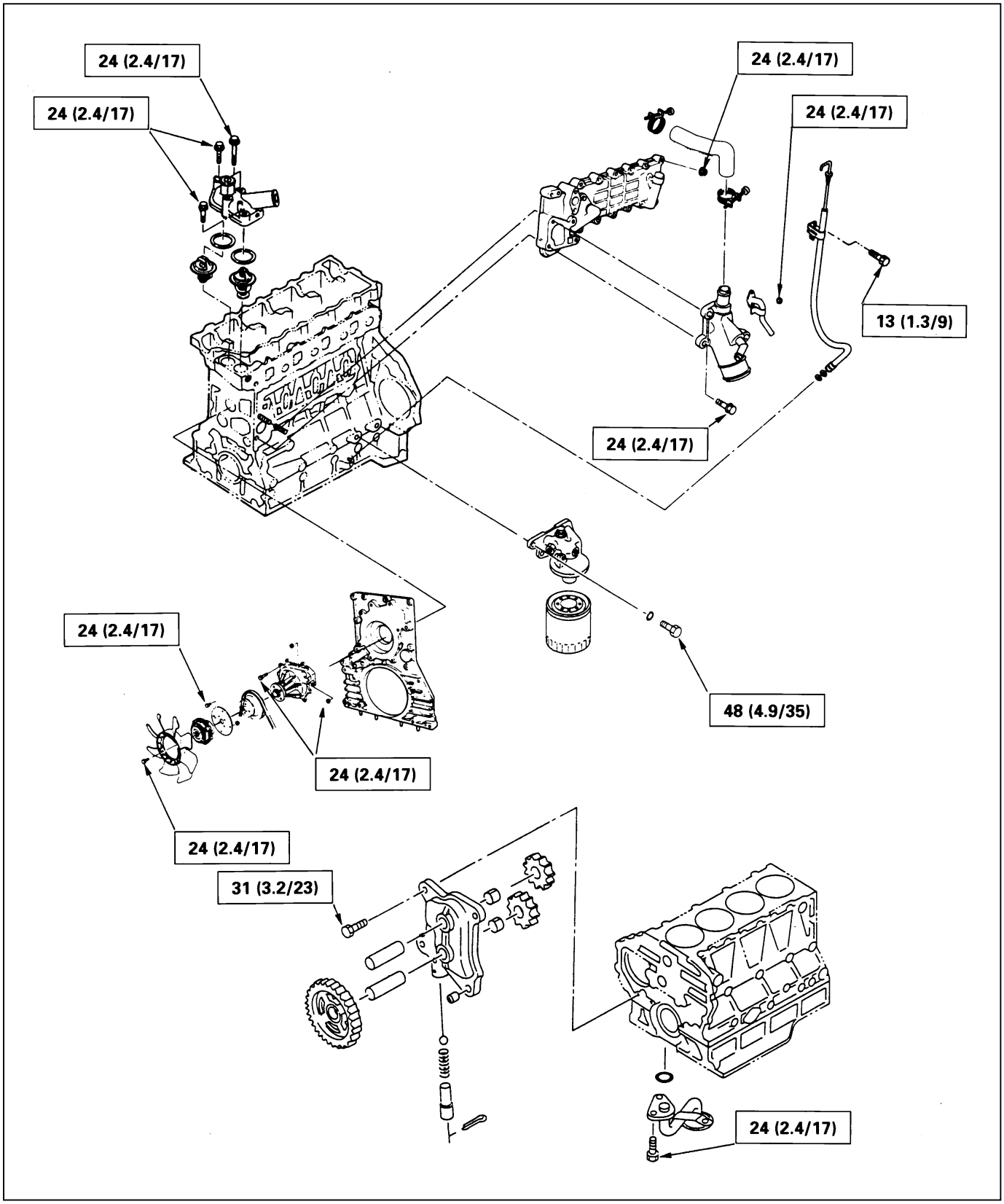

0064-1.tif

GENERATOR, STARTER AND GLOW PLUG

N•m (kg•m/lb•ft)

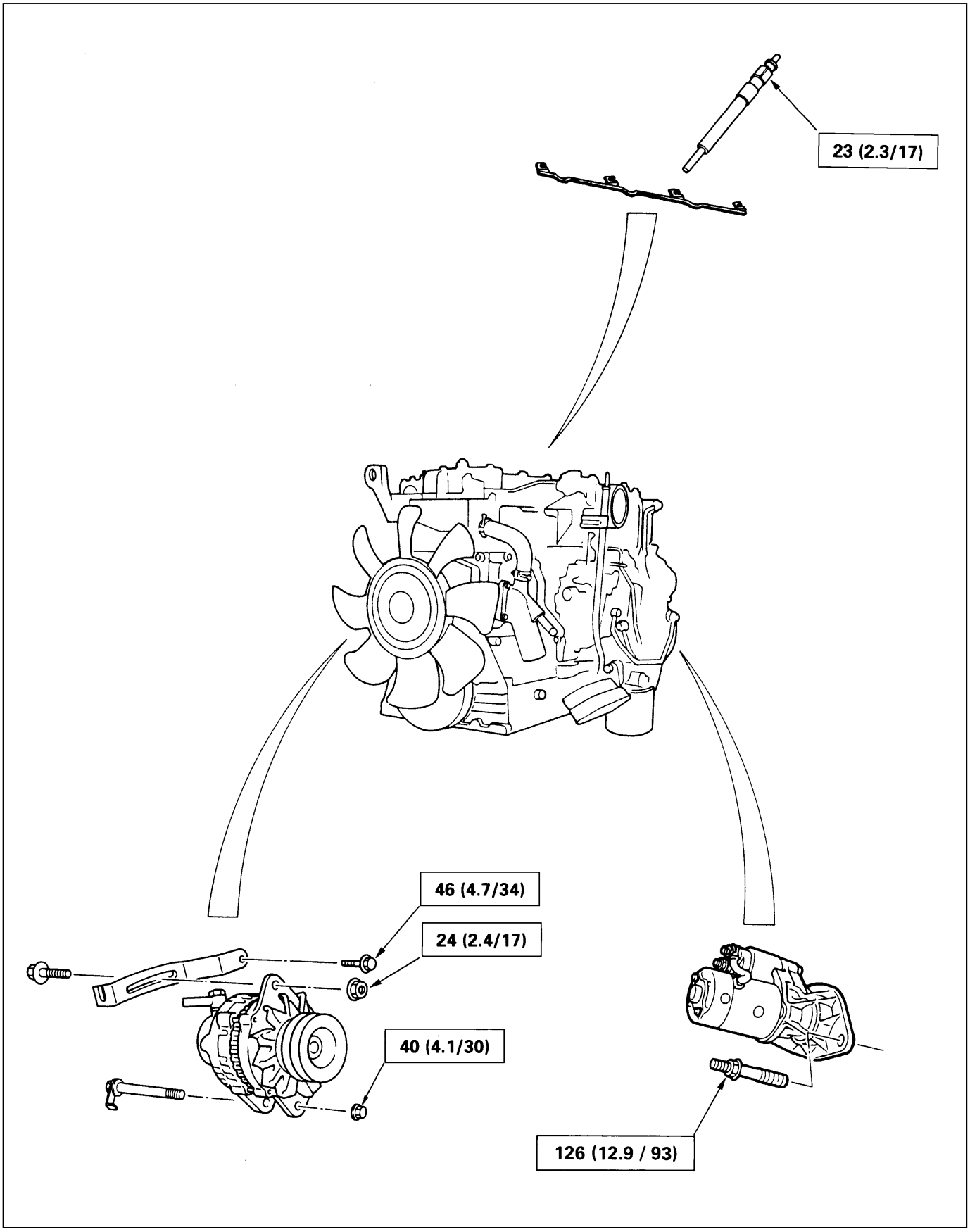

0065-1.tif

ENGINE MOUNTING

N•m (kg•m/lb•ft)

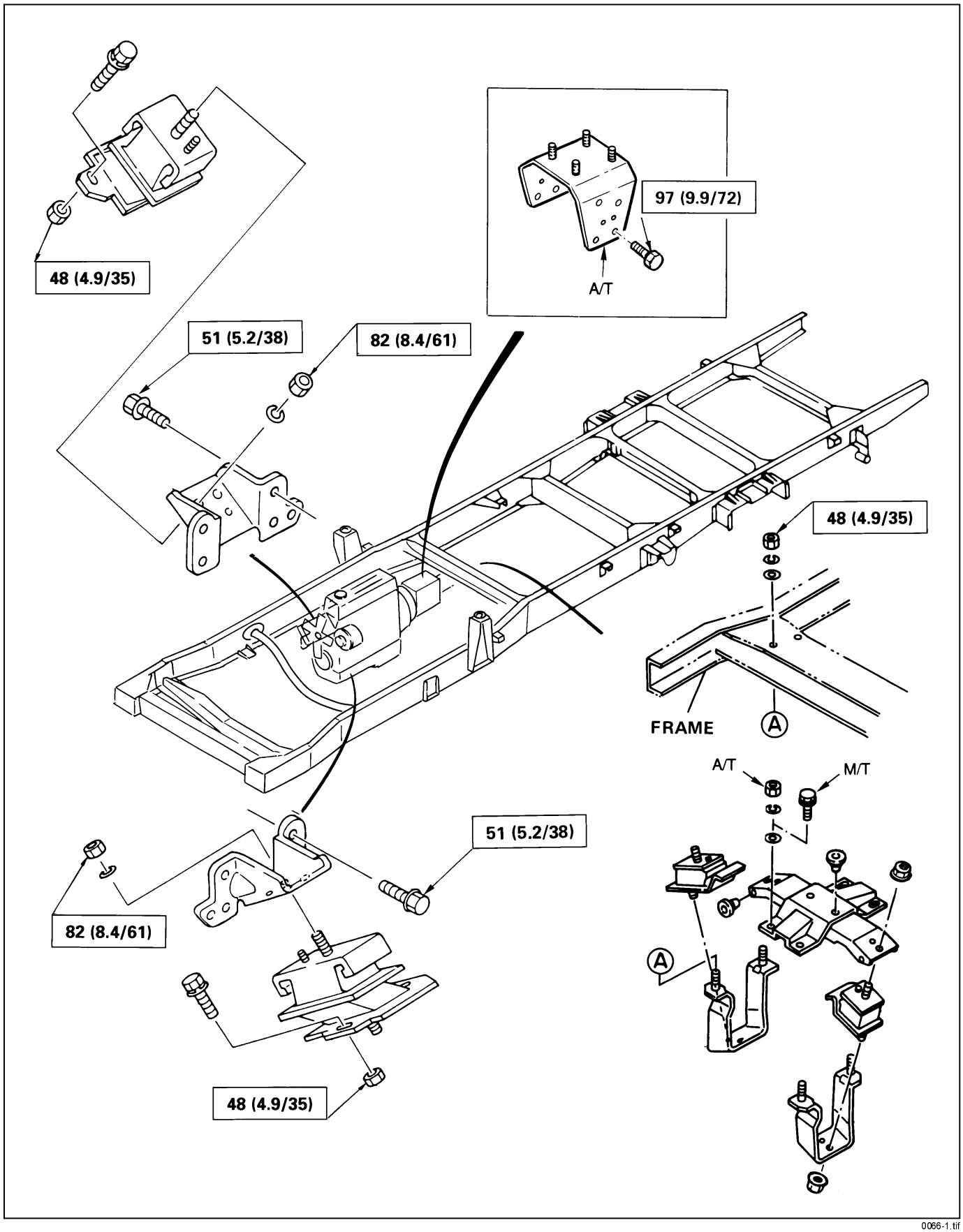

0066-1.tif

INJECTION PUMP, INJECTION PIPE AND FUEL PIPE N•m (kg•m/lb•ft)

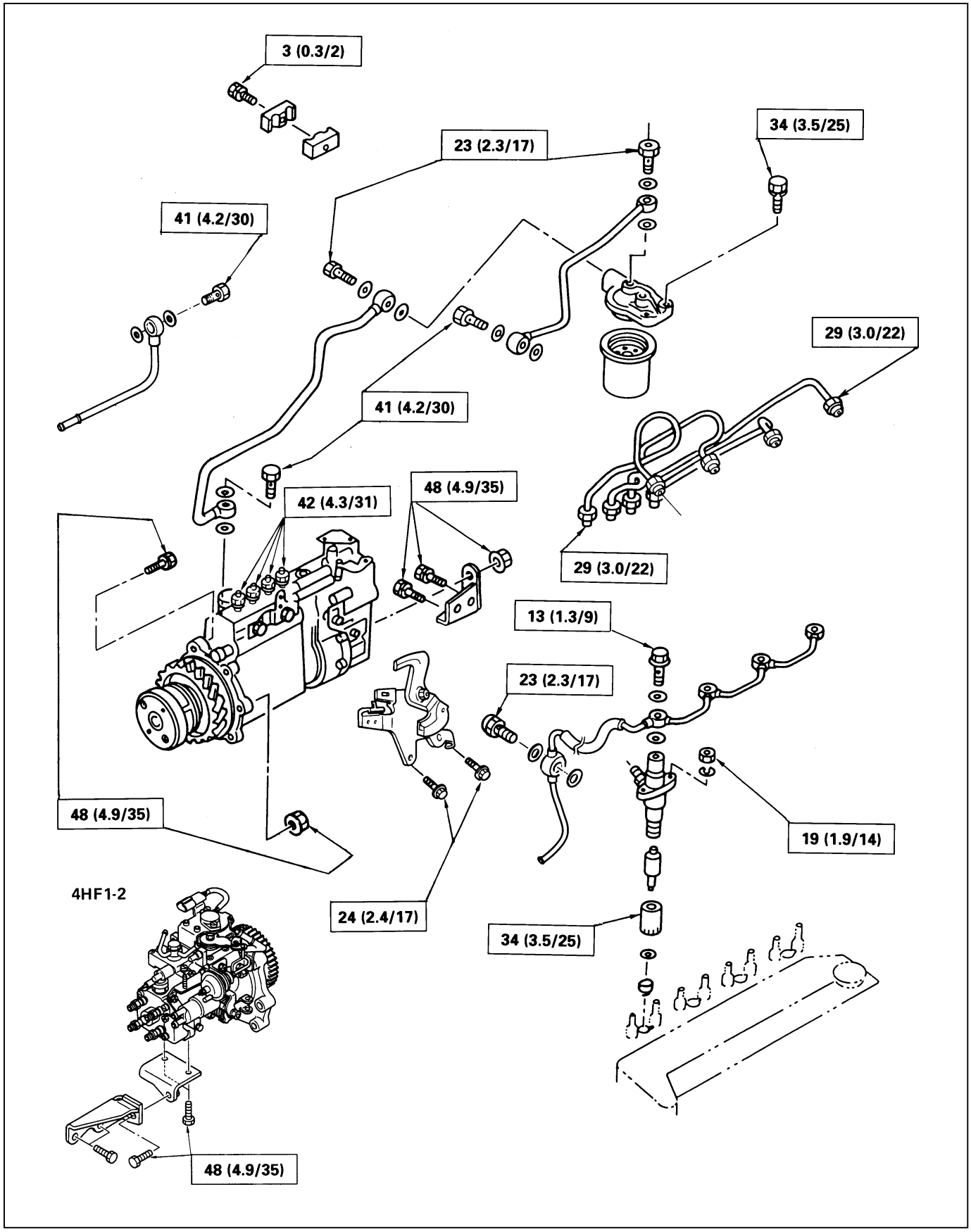

0067-1.tif

SPECIAL TOOLS

Item No.	Illustration	Part No.	Part Name	Remarks
1		1-8522-1097-0	Oil filter wrench	
2		5-8840-2675-0	Compression gauge with adapter	
3		5-8531-7001-0	Compression gauge adapter	
4		5-8840-0266-0	Angle gauge	For angular bolt and nut tightening
5		5-8840-9018-0	Piston installer	
6		5-8840-2230-0	Crankshaft stopper	
7		5-8840-2360-0	Slinger puller	For crankshaft front and rear slinger remove
8		5-8840-2431-0	Oil seal setting tool kit	For crankshaft front and rear oil seal and slinger install
9		5-8840-2240-0	Clutch pilot aligner	
10		5-8840-2228-0	Valve spring compressor	

Item No.	Illustration	Part No.	Part Name	Remarks
11		5-8840-2227-0	Valve guide replacer	
12		8-9439-6815-0	Valve guide seal installer	
13		5-8840-2222-0	Sealing cup installer	
14		9-8523-1169-0	Cylinder liner remover	
15		5-8840-2220-0 5-8840-2397-0 (4HG1)	Cylinder liner remover ankle	
16		5-8840-2337-0	Cylinder Liner Installer (4HE1-T and 4HE1-TC only)	
17		8-9439-6818-0	Crankshaft gear remover	
18		8-9439-6819-0	Crankshaft gear installer	
19		5-8840-2340-0	Conrod bush replacer	
20		5-8840-2094-0	Oil filter wrench	4WD model

LUBRICATING SYSTEM

GENERAL DESCRIPTION

LUBRICATING OIL FLOW

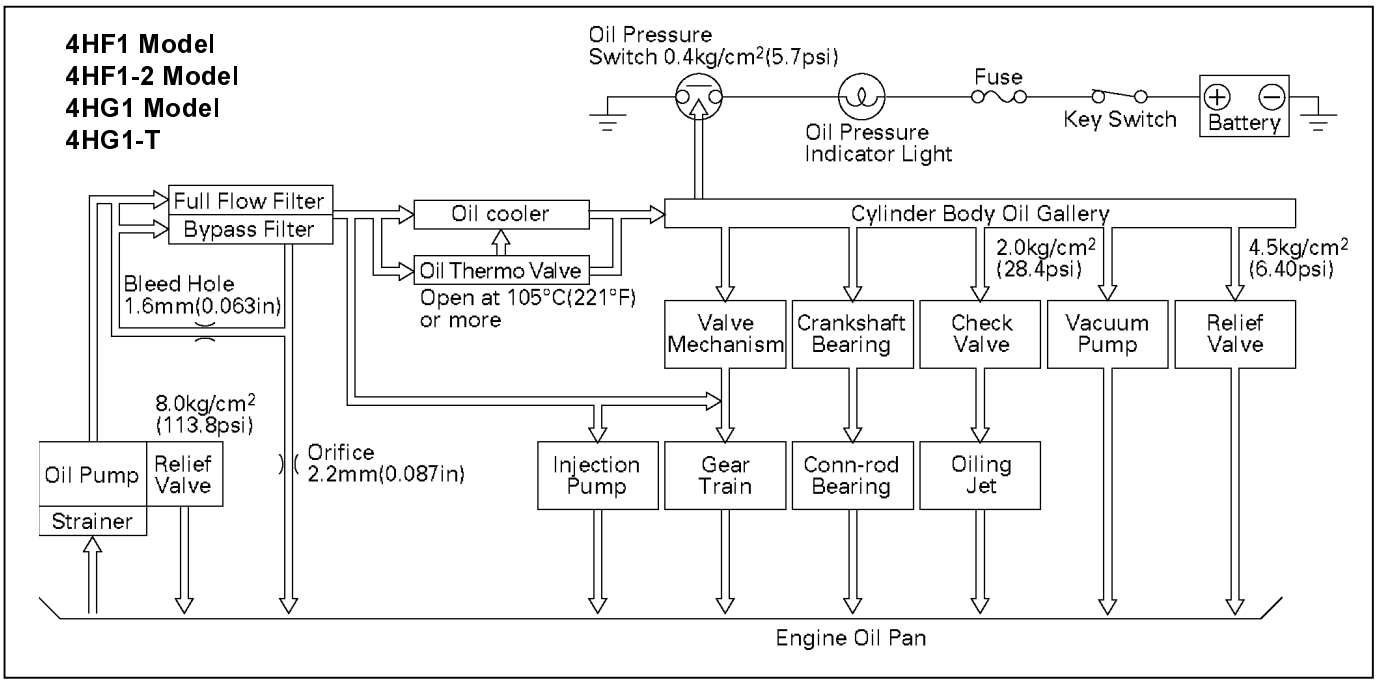

901LW006.tif

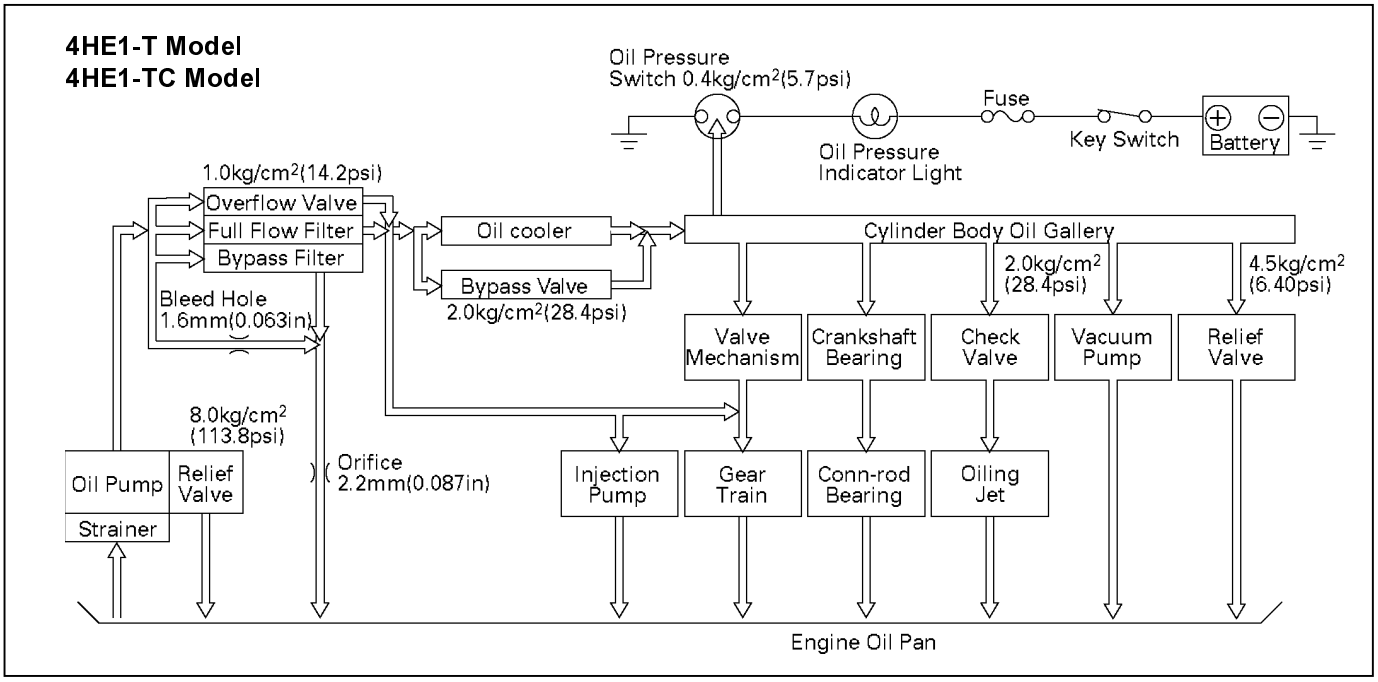

901LW007.tif

The engine lubricating system is a full flow type.

Lubricating oil is pumped from the oil pump to the cylinder body oil gallery through the oil filter and the oil cooler. It is then delivered to the vital parts of the engine from the cylinder body oil gallery.

Oil jets installed on the cylinder body spray engine oil to the piston inside faces to achieve maximum cooling effect.

SECTION 6A

ENGINE MECHANICAL

CONTENTS

	PAGE
Cylinder Head	6A - 2
Valve Spring, Valve Guide Oil Seal, Valve, Valve Guide	6A - 8
Camshaft	6A - 16
Rocker Arm Assembly	6A - 19
Oil Pump	6A - 23
Crankshaft	6A - 29
Piston and Connecting Rod	6A - 53
Cylinder Block	6A - 63

CYLINDER HEAD

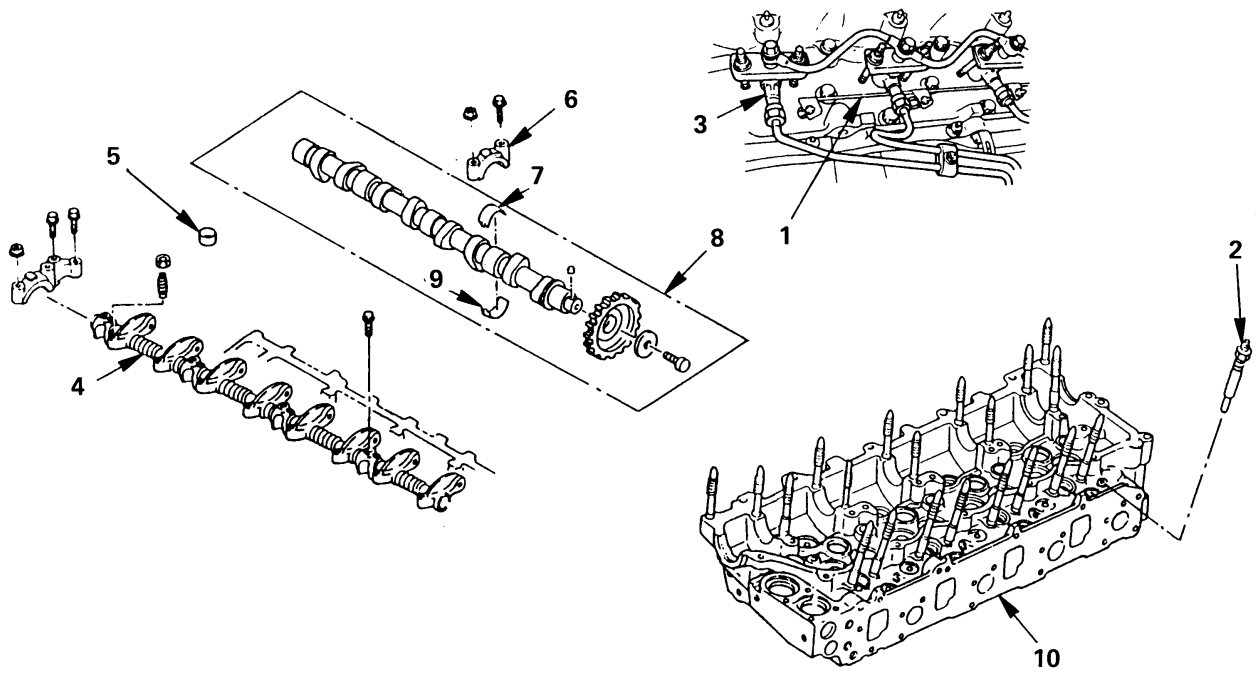

Disassembly steps

1. Glow plug connector
2. Glow plug
3. Injection nozzle holder assembly
4. Rocker arm shaft assembly
5. Valve cap
6. Camshaft bearing cap
7. Camshaft bearing upper
8. Camshaft assembly
9. Camshaft bearing lower
10. Cylinder head

Reassembly steps

To reassemble, follow the disassembly steps in the reverse order.

6A2-1.tif

NOTE:

- **During disassembly, be sure that the valve train components are kept together and identified so that they can be re-installed in their original locations.**
- **Before removing the cylinder head from the engine and before disassembling the valve mechanism, make a compression test and note the results.**

DISASSEMBLY

1. **Glow Plug Connector**
2. **Glow Plug**
3. **Injection Nozzle Holder Assembly**

   Mark the nozzle holder assemblies fitting positions by tagging each nozzle holder assembly with the cylinder number from which it was removed.

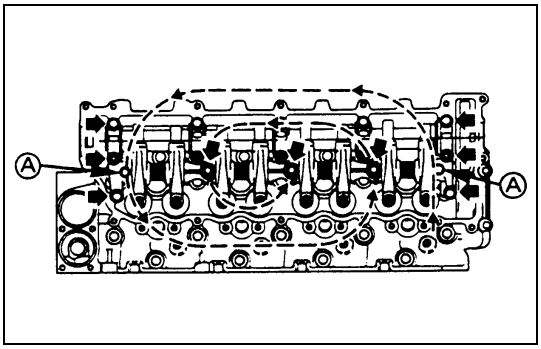

6A3-1.tif

4. Rocker Arm Shaft Assembly

1) Loosen the rocker arm shaft bracket nuts and bolts in numerical order a little at a time and remove the rocker arm shaft assembly with the camshaft brackets.
2) Leave the Ⓐ indicated bolt unremoved on this occasion, since it is the rocker arm fixing bolt.

CAUTION:

Failure to loosen the rocker arm shaft bracket nuts and bolts in numerical order a little at a time will adversely affect the rocker arm shaft.

5. Valve Cap

CAUTION:

Take sufficient care not to let valve caps fall into the gear case or oil return hole.

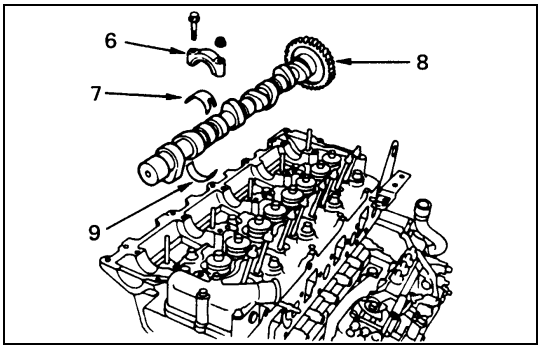

6A3-2.tif

6. Camshaft Bearing Cap
7. Camshaft Bearing Upper
8. Camshaft Assembly
9. Camshaft Bearing Lower

If the camshaft bearings are to be reinstalled, mark their fitting positions by tagging each bearing with the cylinder number from which it was removed.

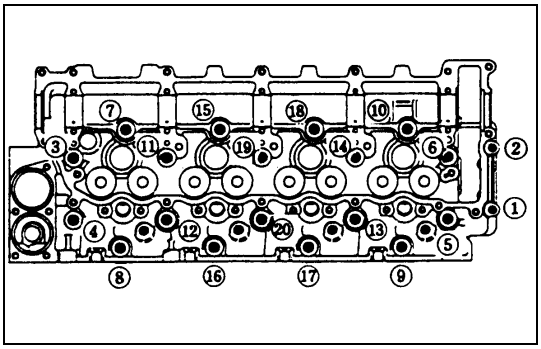

6A3-3.tif

10. Cylinder Head

Loosen the cylinder head bolts in numerical order a little at a time.

CAUTION:

Failure to loosen the cylinder head bolts in numerical order a little at a time will adversely affect the cylinder head lower surface.

- Refer to Section 6A3 “CYLINDER HEAD”.

CLEAN

- Cylinder head bolts
- Cylinder head

  Carefully remove all varnish, soot and carbon to the bare metal. Do not use a motorized wire brush on any gasket sealing surface.

INSPECTION AND REPAIR

Make the necessary adjustments, repairs, and part replacements if excessive wear or damage is discovered during inspection.

- Cylinder head gasket and mating surfaces for leaks, corrosion and blow-by. If the gasket has failed, determine the cause;
  - Improper installation
  - Loose or warped cylinder head
  - Insufficient torque on head bolts
  - Warped case surface

1) Cylinder head bolts for damaged threads or stretching and damaged heads caused by improper use of tools.

CAUTION:
Suspected bolts must be replaced.

2) Cylinder head for cracks, especially between valve seats and in the exhaust ports.
3) Cylinder head deck for corrosion, sand particles in head and porosity.

CAUTION:
Do not attempt to weld the cylinder head. Replace it.

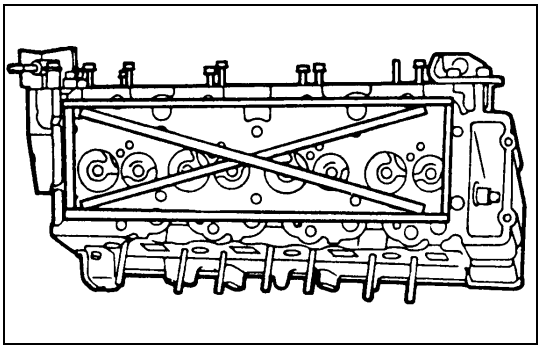

6A4-1.tif

Cylinder Head Lower Face Warpage

1) Use a straight edge and a feeler gauge to measure the four sides and the two diagonals of the cylinder head face.
2) If the measured values exceed the specified limit, the cylinder head must be replaced.

NOTE:
Do not regrind the cylinder head lower face.

Cylinder Head Lower Face Warpage mm (in)

Standard	Limit
0.05 (0.002) or less	0.2 (0.008)

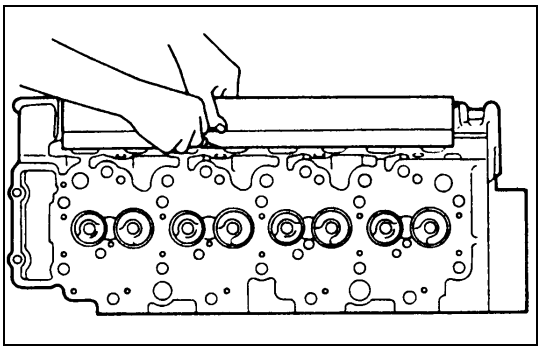

6A4-2.tif

Manifold Fitting Face Warpage

Use a straight edge and a feeler gauge to measure the manifold cylinder head fitting face warpage.

Regrind the manifold cylinder head fitting faces if the measured value is greater than the specified limit.

Manifold Fitting Face Warpage mm (in)

Standard	Limit
0.05 (0.002) or less	0.2 (0.008)

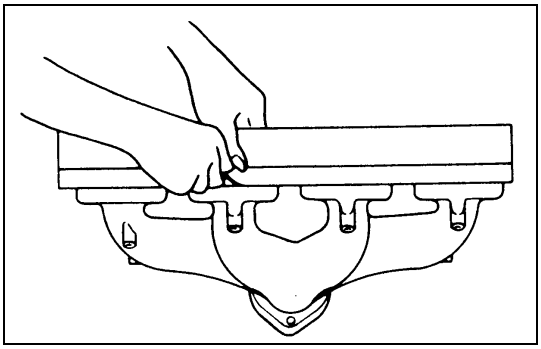

6A5-1.tif

Exhaust Manifold Warpage

Use a straight edge and a feeler gauge to measure the manifold cylinder head fitting face warpage.

If the measured values exceed the specified limit, the manifold must be replaced.

Exhaust Manifold Warpage mm(in)

Standard	Limit
0.05 (0.002) or less	0.24 (0.008)

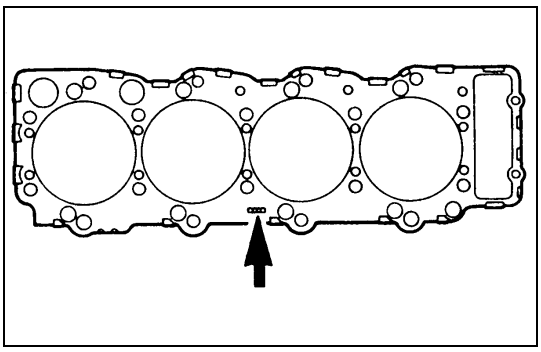

6A5-2.tif

REASSEMBLY

Install the cylinder head gasket with its “PART NUMBER” mark facing up and toward the left of the engine.

CAUTION:

Do not reuse the cylinder head gasket.

Above works refer to “CYLINDER BLOCK” section in this manual.

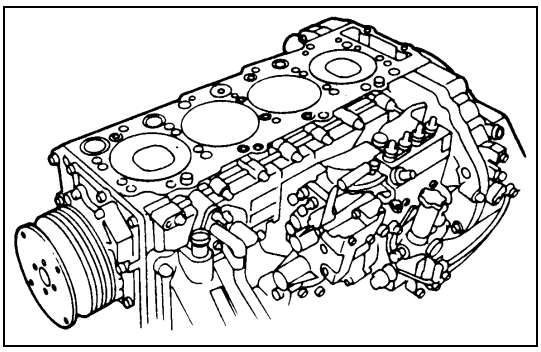

6A5-3.tif

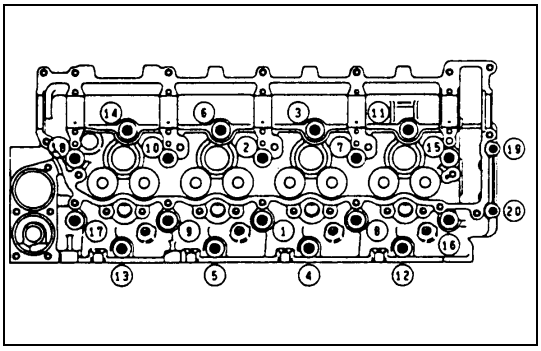

6A5-4.tif

10. Cylinder Head

1) Align the cylinder body dowels and the cylinder head dowel holes.
2) Carefully place the cylinder head on the cylinder head gasket.
3) Apply a coat of molybdenum disulfide grease to the M14 cylinder head bolt threads and setting faces and apply a coat of engine oil to the M10 cylinder head bolt threads and setting faces.
4) Use the angular tightening method to tighten the bolts (M14) to the specified torque in three steps following the numerical order shown in the illustration.

Cylinder Head Bolt Torque (M14) (① ~ ⑱)

N•m (kg•m/lb•ft)

1st step	2nd step	3rd step
98 (10/72)	147 (15/108)	30° - 60°

5) Tighten the cylinder head to the flywheel housing bolts (M10) to the specified torque.

Cylinder Head Bolt Torque (M10) (⑲~⑳)

N•m (kg•m/lb•ft)

38 (3.9/28)

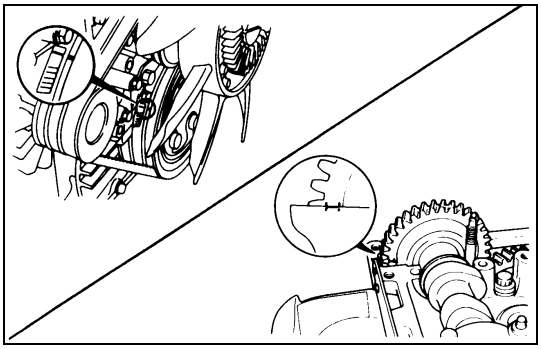

6A6-1.tif

9. Camshaft Bearing Lower

8. Camshaft Assembly

1) Turn the crankshaft in the direction of normal rotation until the timing mark on the crankshaft damper pulley is aligned with the TDC notched line. (Confirm that the No. 1 cylinder piston comes to the compression top dead center.)
2) Apply engine oil to the camshaft journal and the camshaft bearing surfaces before installation.
3) Carefully align the camshaft gear "I" mark and the cylinder head upper face shown in the illustration.

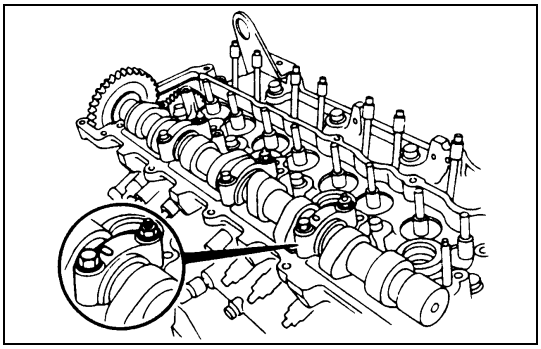

6A6-2.tif

7. Camshaft Bearing Upper

6. Camshaft Bearing Cap

1) Install the bearing caps with the bearing cap head mark (arrow) facing forward.
2) Apply a coat of engine oil to the bearing cap bolt and stud threads.

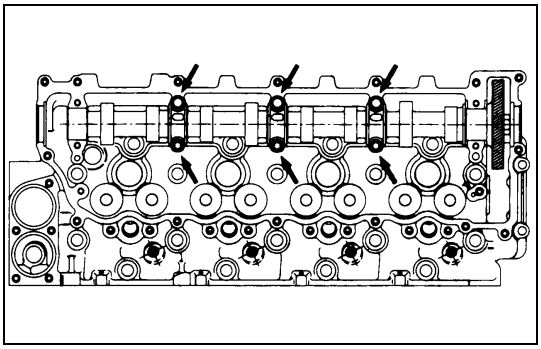

6A6-3.tif

3) Tighten the bearing cap bolts and studs to the specified torque.

Camshaft Bearing Cap Nut and Bolt Torque

N•m (kg•m/lb•ft)
27 (2.8/20)

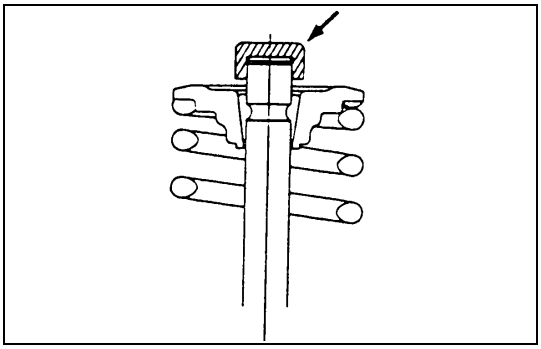

6A6-4.tif

5. Valve Cap

Apply engine oil to the inside of the valve caps and install them to the valve stem end.

CAUTION:

Take sufficient care not to let valve caps fall into the gear.

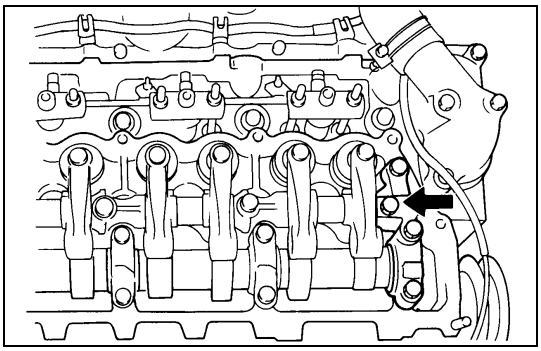

6A6-5.tif

4. Rocker Arm Shaft Assembly

1) Temporarily tighten the bolts marked with the arrow in the illustration.
2) Loosen the rocker arm adjust screws and apply engine oil to the rocker arm roller portions.
3) Install the rocker arm assembly on the cylinder head.

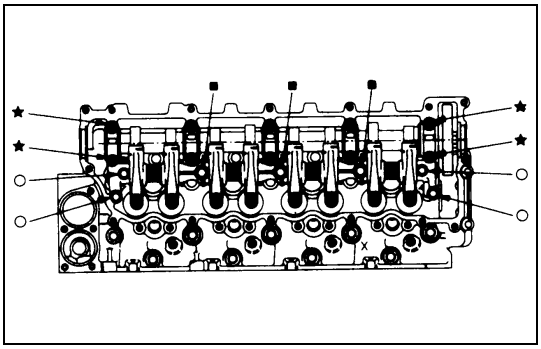

6A7-1.tif

4) Tighten the rocker arm shaft bracket nuts and bolts to the specified torque in numerical order a little at a time as shown in the illustration.

Rocker Arm Shaft Bracket Nut and Bolt Torque — N•m (kg•m/lb•ft)

★ Nut	27 (2.8/20)
■ Bolt	56 (5.7/41)
□ Bolt	27 (2.8/20)

5) Apply engine oil to the threaded portion of the nuts marked with "★" and the bolts with "■" shown in the illustration left, and tighten them to the specified torque.

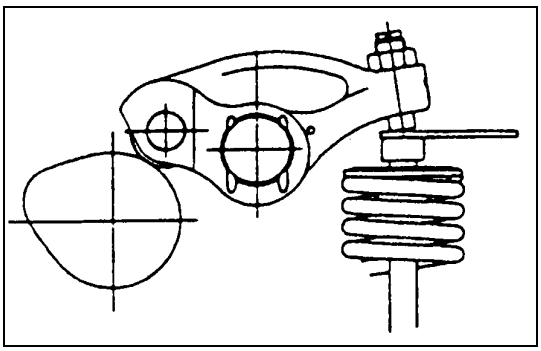

6A7-2.tif

Adjust the valve clearance.

Valve Clearance — mm (in)

At cold	0.4 (0.016)

Above works refer to "SERVICING" "VALVE CLEARANCE ADJUSTMENT" previously section in this manual.

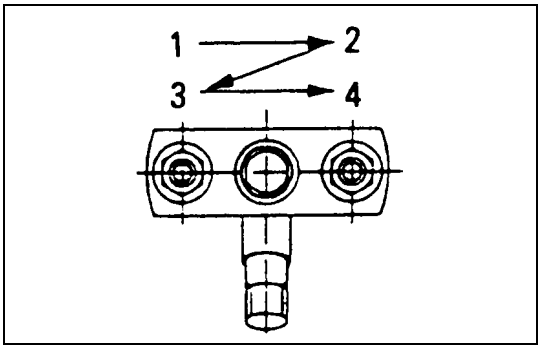

6A7-3.tif

3. Injection Nozzle Holder Assembly

Tighten the nozzle holder flange nuts to the specified torque in the numerical order shown in the illustration.

Nozzle Holder Flange Nut Torque — N•m (kg•m/lb•ft)

19 (1.9/14)

2. Glow Plug

Glow Plug Torque — N•m (kg•m/lb•ft)

23 (2.3/17)

1. Glow Plug Connector

VALVE SPRING, VALVE GUIDE OIL SEAL, VALVE, VALVE GUIDE

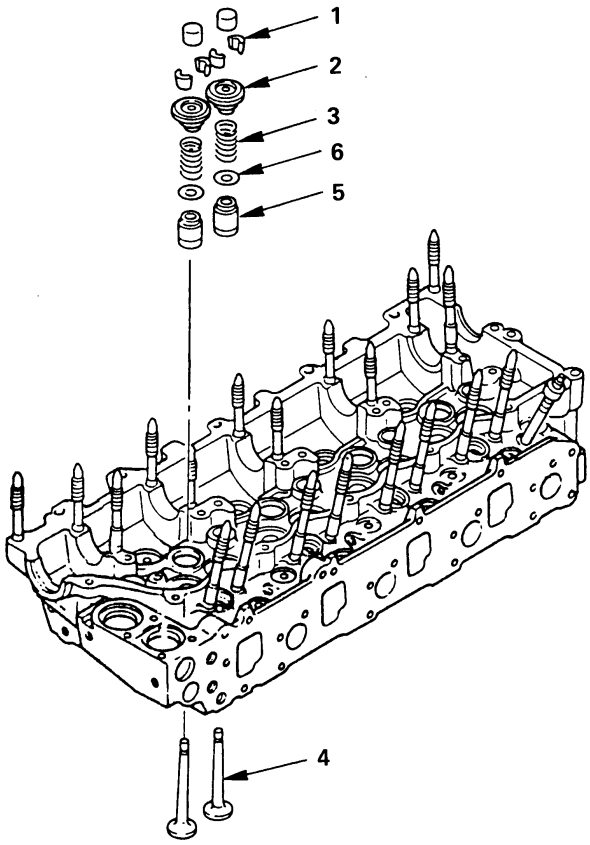

Disassembly steps
1. Split collar
2. Spring upper seat
3. Valve spring
4. Intake and exhaust valve
5. Valve guide seal
6. Spring lower seat

Reassemblt steps
To reassemble, follow the disassebly steps in the reverse order.

6A8-1.tif

DISASSEMBLY

Preparation

- Remove all the parts only with the cylinder head assembly left.
  (Above works refer to “CYLINDER HEAD GASKET” section 6A3 in this manual.)

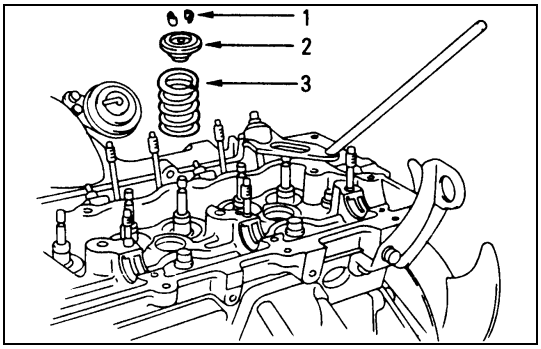

6A8-2.tif

1. **Cotter Collar**
   1) Place the cylinder head on a flat wooden surface.
   2) Use the valve spring compressor to remove the cotter collar.
      Do not allow the valve to fall from the cylinder head.
      Valve Spring Compressor: 5-8840-2228-0
2. **Spring Upper Seat**
3. **Valve Spring**

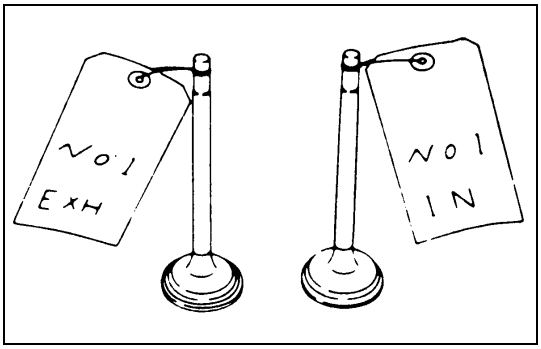

6A9-1.tif

4. Intake and Exhaust Valve

If the intake and exhaust valves are to be reinstalled, mark their installation positions by tagging each valve with the cylinder number from which it was removed.

If the intake and exhaust valves are to be replaced, the valve guides must also be replaced.

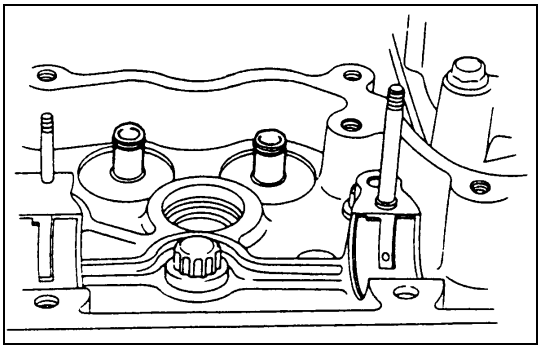

6A9-2.tif

5. Valve Guide Seal

6. Spring Lower Seat

INSPECTION AND REPAIR

Make the necessary adjustments, repairs, and part replacements if excessive wear or damage is discovered during inspection.

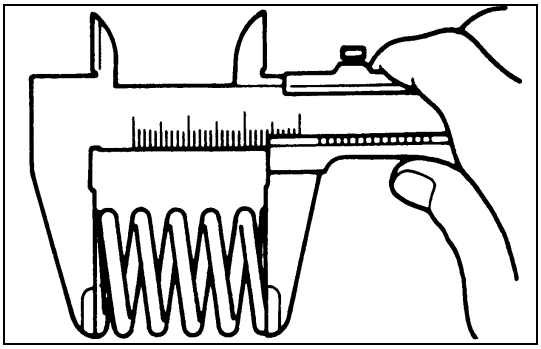

6A9-3.tif

Valve Spring Free Height

Use a vernier caliper to measure the valve spring free height.

If the measured valve is less than the specified limit, the valve spring must be replaced.

Valve Spring Free Height mm (in)

4HF1: 4HF1-2: 4HG1: 4HG1-T

Nominal Size	Limit
62.5 (2.46)	59.4 (2.34)

4HE1-T: 4HE1-TC:

	Nominal size	Limit
Intake Inner	53.2 (2.094)	50.1 (1.972)
Intake Outer	55.6 (2.189)	52.5 (2.067)
Exhaust Inner	58.6 (2.307)	55.5 (2.185)
Exhaust Outer	62.0 (2.441)	58.9 (2.319)

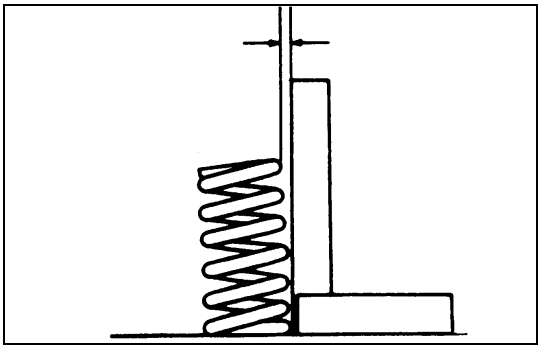

6A10-1.tif

Valve Spring Squareness

Use a surface plate and a square to measure the valve spring squareness.

If the measured value exceeds the specified limit, the valve spring must be replaced.

Valve Spring Squareness mm (in)

Limit	1.0 (0.04)

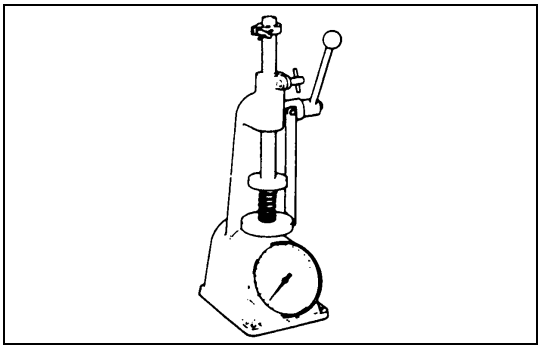

6A10-2.tif

Valve Spring Tension

Use spring tester to measure the valve spring tension.

If the measured valve is less than the specified limit, the valve spring must be replaced.

Valve Spring Tension N (kg/lb)

Set Length mm(in)	Standard	Limit
47.0 (1.85)	414 - 477 (42.2 - 48.6/93 - 107)	401 (40.9/98)

Valve Guide

CAUTION:

Taking care not to damage the valve seat contact surface, when removing carbon adhering to the valve head.

Carefully inspect the valve stem for scratching or abnormal wear. If these conditions are present, the valve and the valve guide must be replaced as a set.

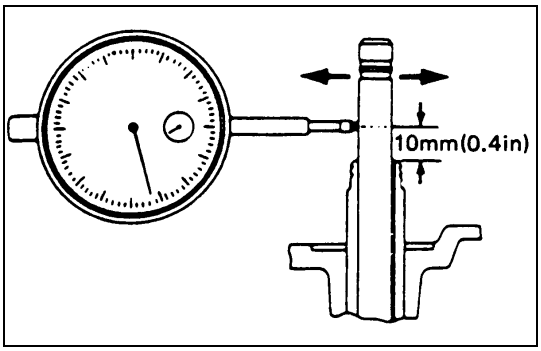

6A10-3.tif

Valve Stem and Valve Guide Clearance

(Measuring Method-I)

1) Set the dial indicator to the valve stem measuring point.
2) Move the valve stem end from side to side.
   Read the dial indicator.
   Note the total indicator reading.
   If the measured values exceed the specified limit, the valve and the valve guide must be replaced as a set.

Total Dial Indicator Reading
(Valve Stem and Valve Guide Clearance) mm (in)

Valve	Standard	Limit
Intake Valve	0.038 - 0.071 (0.0015 - 0.0028)	0.20 (0.0079)
Exhaust Valve	0.064 - 0.096 (0.0025 - 0.0038)	0.25 (0.0098)

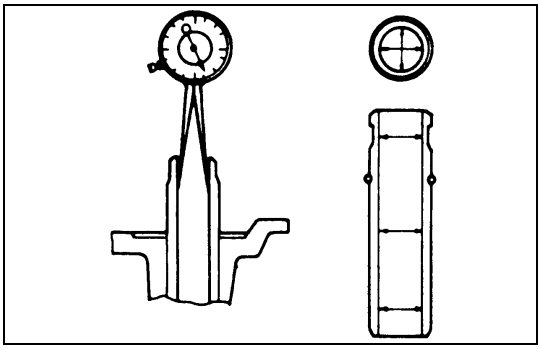

6A11-1.tif

(Measuring Method-II)

1) Measure the valve stem outside diameter.
   Refer to the "Valve Stem Outside Diameter."
2) Use a caliper calibrator or a telescoping gauge to measure the valve guide inside diameter.
3) Calculate the clearance between the valve guide inside diameter and the valve stem outside diameter.
   If the clearance exceeds the specified limit, the valve and the valve guide must be replaced as a set.

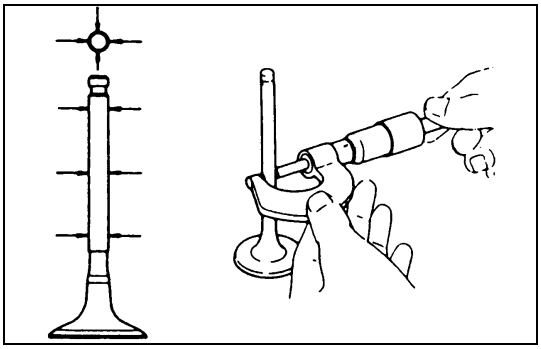

6A11-2.tif

Valve Stem Outside Diameter

Measure the valve stem diameter at three points.

If the measured valve is less than the specified limit, the valve and the valve guide must be replaced as a set.

Valve Stem Outside Diameter mm (in)

Valve	Standard	Limit
Intake Valve	8.946 - 8.962 (0.3522 - 0.3528)	8.88 (0.350)
Exhaust Valve	8.921 - 8.936 (0.3512 - 0.3529)	8.80 (0.346)

Valve Guide Replacement

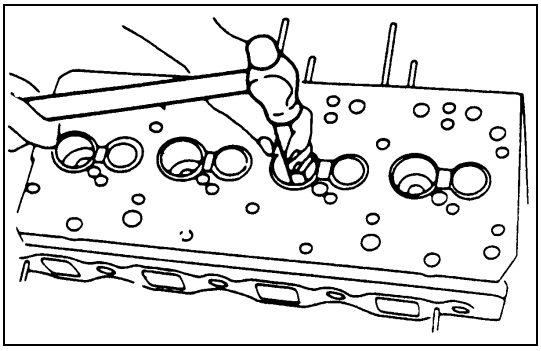

6A11-3.tif

Valve Guide Removal

Use a hammer and the valve guide replacer to drive out the valve guide from the cylinder head lower face.

Valve Guide Replacer: 5-8840-2227-0

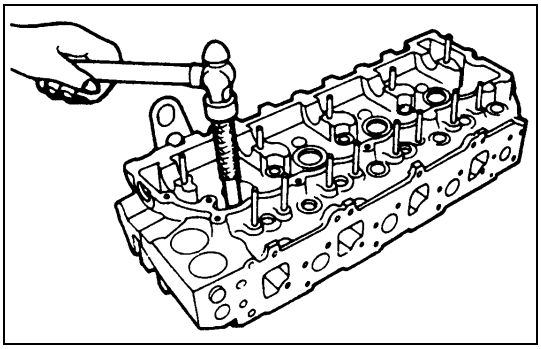

6A11-4.tif

Valve Guide Installation

1) Apply engine oil to the valve guide outer circumference.
2) Attach the valve guide installer to the valve guide.
   Valve Guide Replacer: 5-8840-2227-0
3) Use a hammer to drive the valve guide into position from the cylinder head upper face.

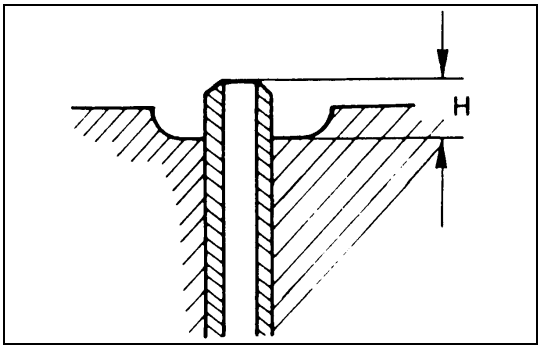

6A12-1.tif

4) Measure the height (H) of the valve guide upper end from the cylinder head upper face.

Valve Guide Upper End Height (H)	mm (in)
14.1 ± 0.2 (0.555 ± 0.008)	

NOTE:

If the valve guide has been removed, both the valve and the valve guide must be replaced as a set.

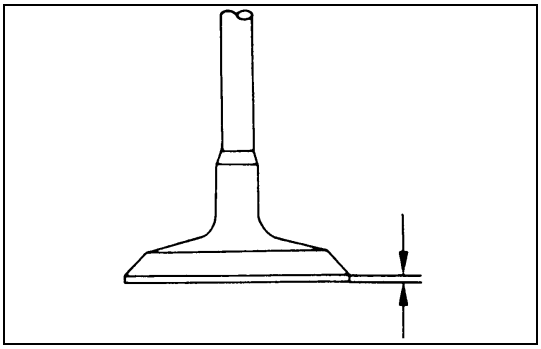

6A12-2.tif

VALVE AND VALVE SEAT INSERT

Valve Thickness and Depression

1) Measure the valve thickness.

   If the measured value is less than the specified limit, the valve and the valve seat insert must be replaced as a set.

Intake and Exhaust Valve Thickness mm(in)

Valve	Nominal Size	Limit
Inlet	1.8 (0.071)	1.3 (0.051)
Exhaust	1.75 (0.069)	1.3 (0.051)

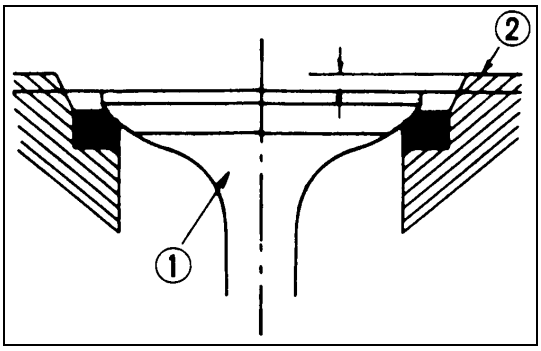

6A12-3.tif

2) Install the new valve ① to the cylinder head ②.
3) Use a depth gauge or a straight edge with steel rule to measure the valve depression from the cylinder head lower surface.

   If the measured value exceeds the specified limit, the valve seat insert and/or the valve must be replaced.

Intake and Exhaust Valve Depression mm (in)

Standard	Limit
0.7 - 1.2 (0.028 - 0.047)	2.5(0.098)

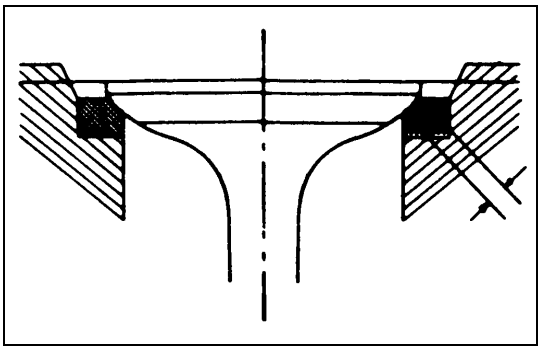

6A12-4.tif

Valve Contact Width

1) Check the valve contact faces for roughness and unevenness.

   Make smooth the valve contact surfaces.
2) Measure the valve contact width.

   If the measured value exceeds the specified limit, the valve seat insert must be corrected or replaced.

Valve Contact Width mm (in)

Valve	Nominal Size	Limit
Intake	2.5 (0.098)	3.0 (0.118)
Exhaust	2.0 (0.079)	2.5 (0.098)

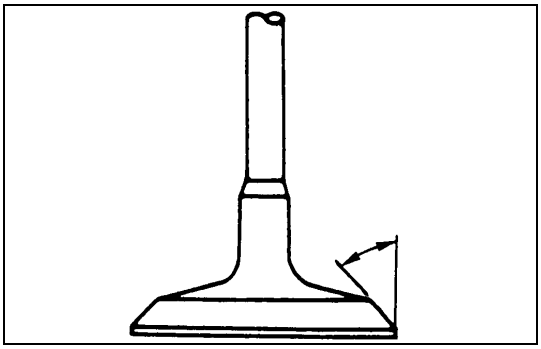

6A13-1.tif

Contact Surface Angle on Valve Seat on Valve

1) Measure contact surface angle on valve seat.
2) If the measured value exceeds the limit, replace valve, valve guide and valve seat as a set.

Standard	Degrees
45°	

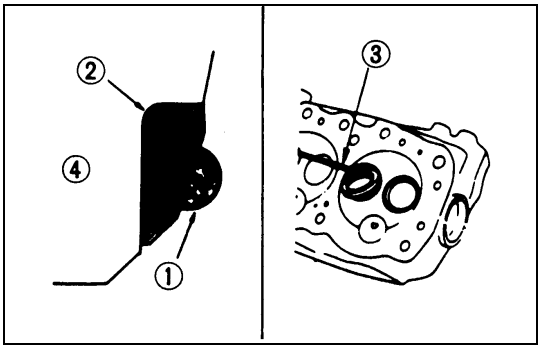

6A13-2.tif

Valve Seat Insert Replacement

Valve Seat Insert Removal

1) Arc weld the entire inside circumference ① of the valve seat insert ②.
2) Allow the valve seat insert to cool for a few minutes. This will invite contraction and make removal of the valve seat insert easier.
3) Use a screwdriver ③ to pry the valve seat insert free. Take care not to damage the cylinder head ④.
4) Carefully remove carbon and other foreign material from the cylinder head insert bore.

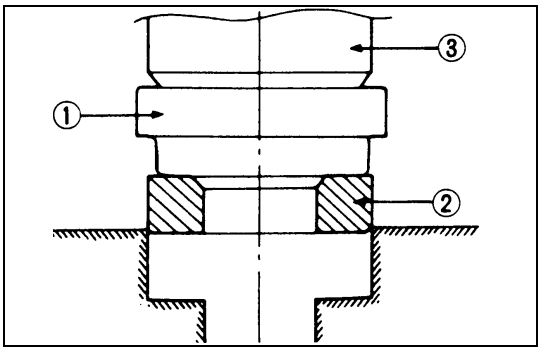

6A13-3.tif

Valve Seat Insert Installation

1) Carefully place the attachment ① (having a smaller outside diameter than the valve seat insert) on the valve seat insert ②.

NOTE:

The smooth side of the attachment must contact the valve seat insert.

2) Use a bench press ③ to gradually apply pressure to the attachment and press the valve seat insert into place.

CAUTION:

Do not apply an excessive amount of pressure with the bench press. Damage to the valve seat insert will result.

3) The valve should be lapped before final assembly to ensure a good valve seal.

   Above works refer to “Valve Seat Insert Correction” section in this manual.

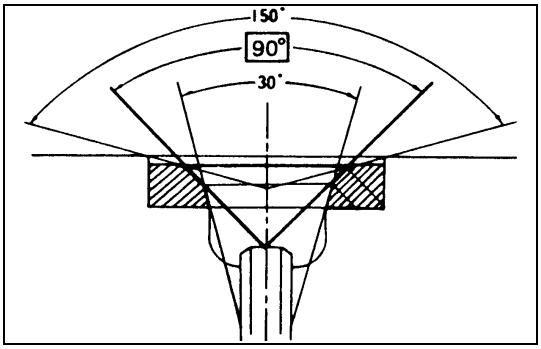

6A14-1.tif

Valve Seat Insert Correction

1) Remove the carbon from the valve seat insert surface.
2) Use a valve cutter (15°, 45°, and 75° blades) to minimize scratches and other rough areas. This will bring the contact width back to the standard value.
   Remove only the scratches and rough areas. Do not cut away too much. Take care not to cut away unblemished areas of the valve seat surface.

Valve Seat Angle	Degrees
45°	

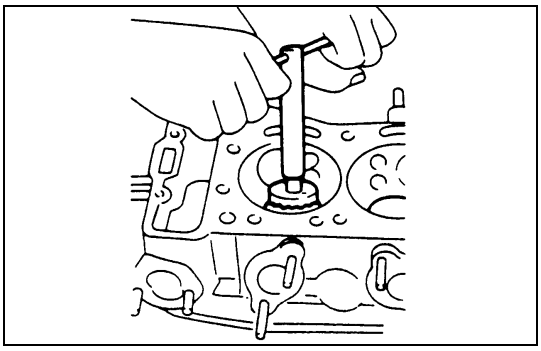
6A14-2.tif

NOTE:
Use an adjustable valve cutter pilot.
Do not allow the valve cutter pilot to wobble inside the valve guide.

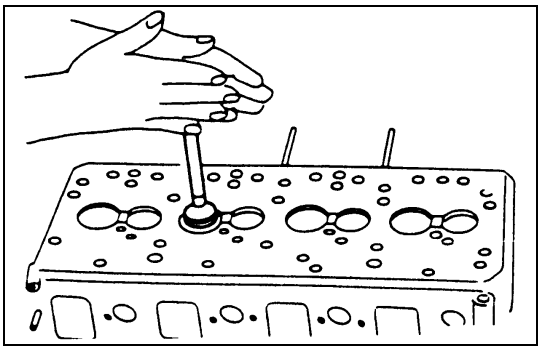
6A14-3.tif

3) Apply abrasive compound to the valve seat insert surface.
4) Insert the valve into the valve guide.
5) Turn the valve while tapping it to fit the valve seat insert.
6) Check to see if the valve contact width is correct.
7) Check to see if the valve seat insert surface is in contact with the entire circumference of the valve.

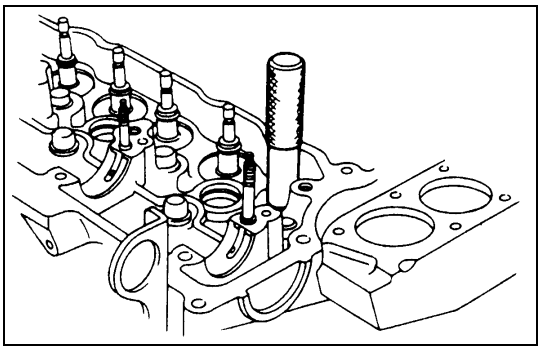
6A14-4.tif

REASSEMBLY

6. Spring Lower Seat

5. Valve Guide Seal

1) Apply a coat of engine oil to the valve guide seal inner face.
2) Use a valve guide seal installer to install the valve guide seal to the valve guide
   Valve Guide Seal Installer: 8-9439-6815-0

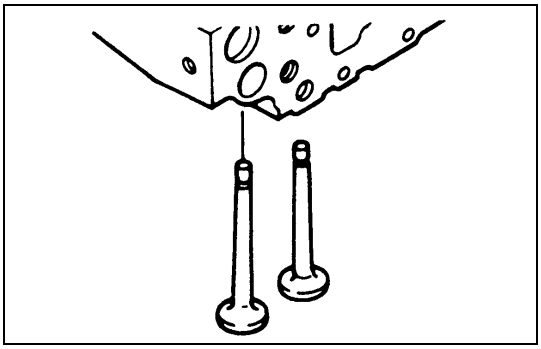

6A15-1.tif

4. Intake and Exhaust Valve

1) Apply a coat of engine oil to each valve stem before installation.
2) Install the intake and exhaust valve.
3) Turn the cylinder head up to install the valve spring.
   Take care not to allow the installed valves to fall free.

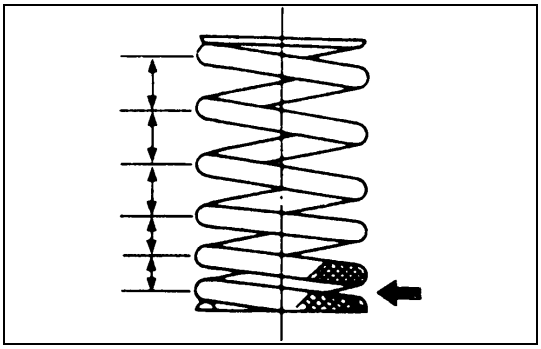

6A15-2.tif

3. Valve Spring

Install the valve spring with its fine pitched (or painted) end side sown.

2. Spring Upper Seat

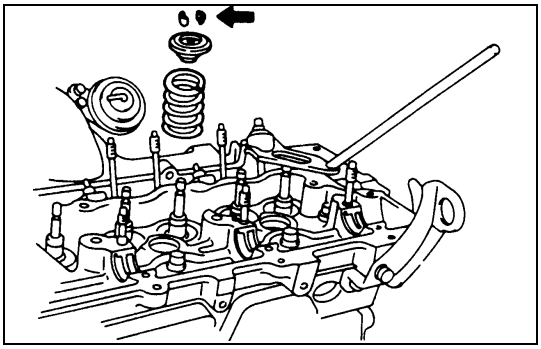

6A15-3.tif

1. Cotter Collar

1) Use the valve spring compressor to push the valve spring into position.
   Valve Spring Compressor: 5-8840-2228-0
2) Install the cotter collar to the valve stem.
3) Set the cotter collar by tapping around the head of the collar with a rubber hammer.

CAMSHAFT

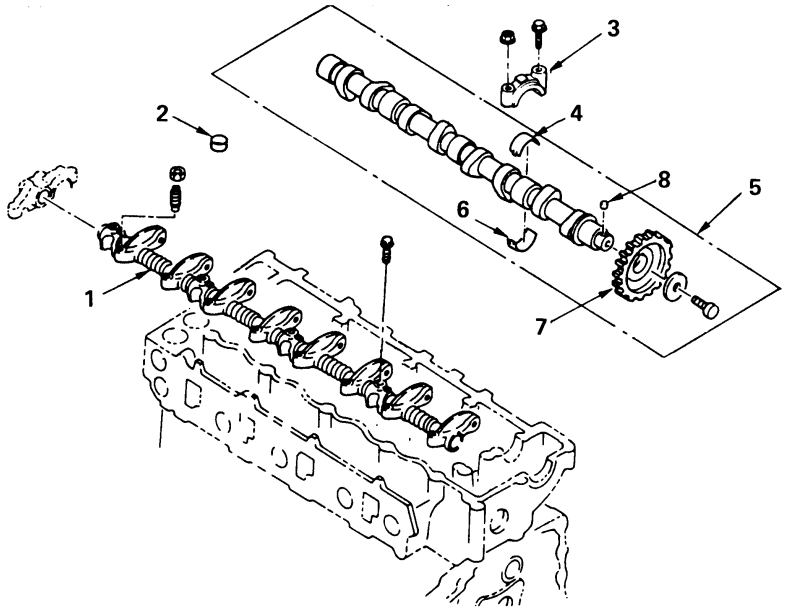

Disassembly steps
1. Rocker arm shaft assembly
2. Valve cap
3. Camshaft bearing cap
4. Camshaft bearing upper
5. Camshaft assembly
6. Camshaft bearing lower
7. Camshaft gear
8. Key

Reassembly steps
To install, follow the disassembly steps in the reverse order.

6A16-1.tif

DISASSEMBLY

1. **Rocker Arm Shaft Assembly**
2. **Valve Cap**
3. **Camshaft Bearing Cap**
4. **Camshaft Bearing Upper**
5. **Camshaft Assembly**
6. **Camshaft Bearing Lower**
   Above works refer to “CYLINDER HEAD” section in this manual.
7. **Camshaft Gear**
   Use the universal puller to pull out the camshaft gear.
   Universal puller: 5-8840-2027-0/(5-8840-0086-0)
8. **Key**

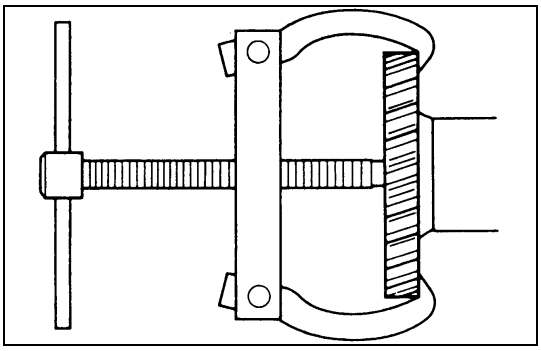

6A16-2.tif

INSPECTION AND REPAIR

Make the necessary adjustments, repairs, and part replacements if excessive wear or damage is discovered during inspection.

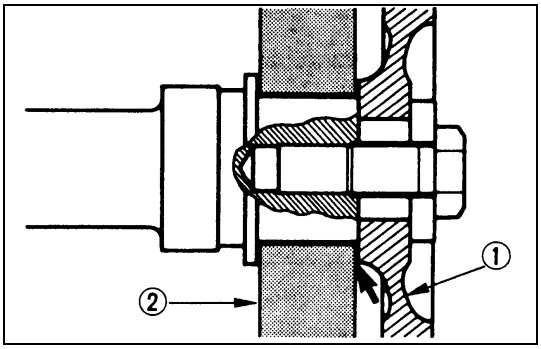

6A17-1.tif

Camshaft End Play

Use a thickness gauge to measure the clearance between the camshaft gear ① and the camshaft bracket ②.

If the measured value exceeds the specified limit, the camshaft gear or the camshaft must be replaced.

Camshaft End Play — mm (in)

Standard	Limit
0.085 - 0.205 (0.0033 - 0.0081)	0.25 (0.0098)

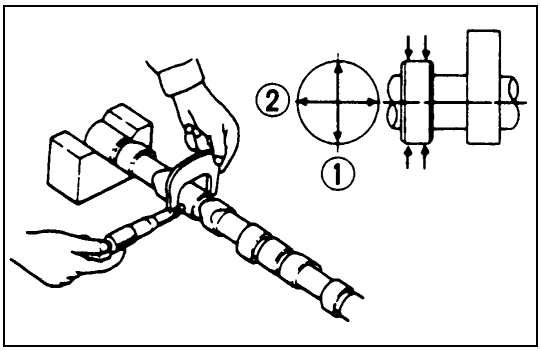

6A17-2.tif

Camshaft Journal Diameter

Use a micrometer to measure each camshaft journal diameter in two directions (① and ②). If the measured value is less than the specified limit, the camshaft must be replaced.

Camshaft Journal Diameter — mm (in)

Standard	Limit
39.950 - 39.975 (1.5728 - 1.5738)	39.850 (1.569)

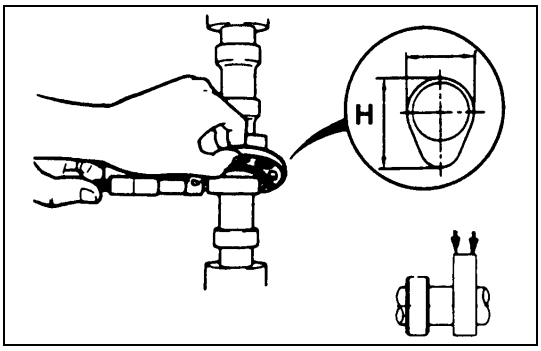

6A17-3.tif

Cam Height

Measure the cam height "H" with a micrometer. If the measured value is less than the specified limit, the camshaft must be replaced.

Cam Height "H" — mm (in)

Engine model	Standard	Limit
Other model	52.8 (2.078)	51.8 (2.039)
4HE1-T 4HE1-TC	53.6 (2.110)	52.6 (2.071)

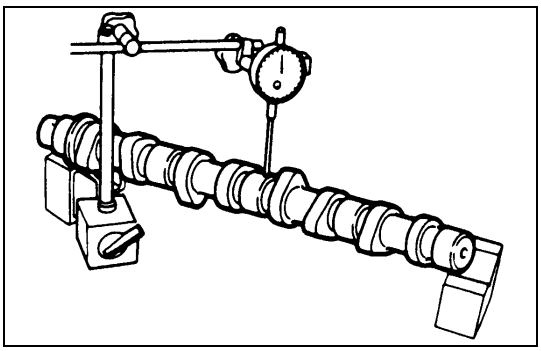
6A17-4.tif

Camshaft Run-Out

1) Mount the camshaft on V-blocks.
2) Measure the run-out with a dial indicator.
   If the measured value exceeds the specified limit, the camshaft must be replaced.

Camshaft Run-Out — mm (in)

Limit	0.05 (0.002)

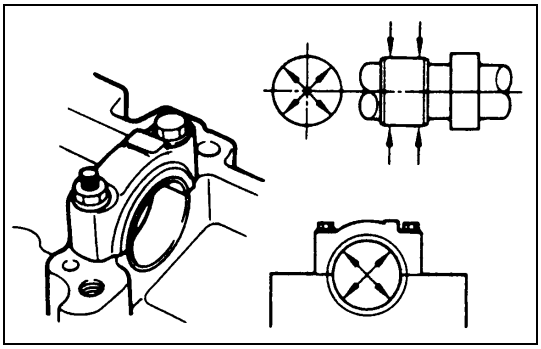

6A18-1.tif

Camshaft and Camshaft Bearing Clearance

Use an inside dial indicator to measure the camshaft bearing inside diameter.

Camshaft Bearing Inside Diameter	mm (in)
Standard	40.000 - 40.037 (1.5748 - 1.5763)

If the clearance between the camshaft bearing inside diameter and the journal exceeds the specified limit, the camshaft bearing must be replaced.

Camshaft Bearing Clearance	mm (in)
Standard	Limit
0.025 - 0.087 (0.00098 - 0.00343)	0.15 (0.0059)

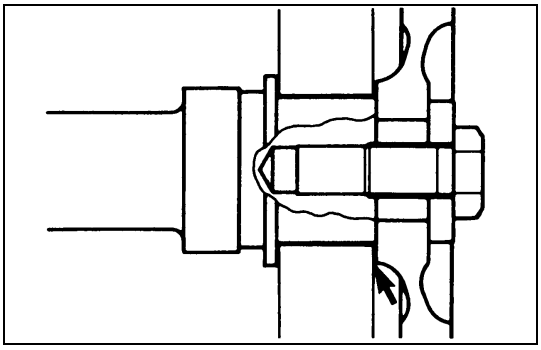

6A18-2.tif

REASSEMBLY

8. **Key**
7. **Camshaft Gear**
   - With the projection of the camshaft gear center boss turned to the camshaft side, set it to the knock pin and install the camshaft gear.

Camshaft Gear Bolt Torque	N•m (kg•m/lb•ft)
142 (14.5/105)	

6. **Camshaft Bearing Lower**
5. **Camshaft Assembly**
4. **Camshaft Bearing Upper**
3. **Camshaft Bearing Cap**
2. **Valve Cap**
1. **Rocker Arm Shaft Assembly**

   Above works refer to “CYLINDER HEAD” section in this manual.

ROCKER ARM ASSEMBLY

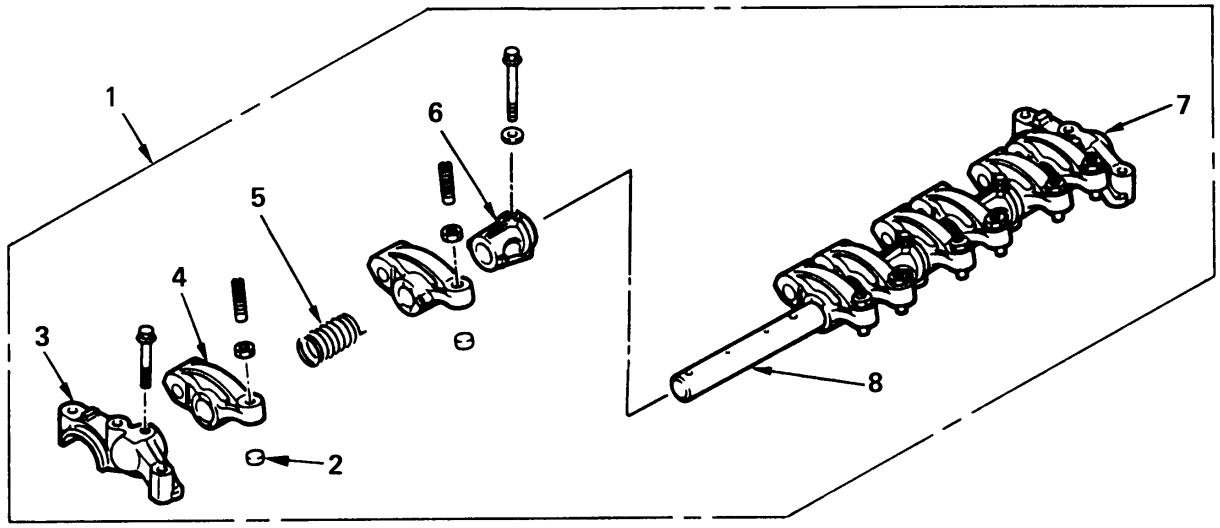

Removal steps
1. Rocker arm assembly
2. Valve cap
3. Camshaft bracket
4. Rocker arm
5. Spring
6. Rocker arm bracket
7. Camshaft bracket
8. Rocker arm shaft

Installation steps
To install, follow the removal steps in the reverse order.

6A19-1.tif

DISASSEMBLY

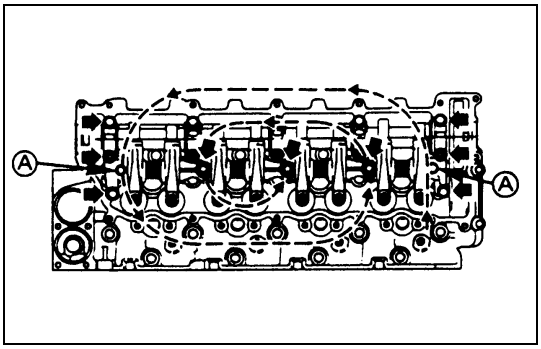

6A19-2.tif

1. **Rocker Arm Shaft Assembly**
   1) Loosen the rocker arm shaft bracket nuts and bolts in numerical order a little at a time and remove the rocker arm shaft assembly with the camshaft brackets.
   2) Leave the Ⓐ indicated bolt unremoved on this occasion, since it is the rocker arm fixing bolt.

CAUTION:
Failure to loosen the rocker arm shaft bracket nuts and bolts in numerical order a little at a time will adversely affect the rocker arm shaft.

2. **Valve Cap**

CAUTION:
Take sufficient care not to let valve caps fall into the gear case or oil return hole.

3. **Camshaft Bracket**
4. **Rocker Arm**
5. **Spring**
6. **Rocker Arm Bracket**
7. **Camshaft Bracket**
8. **Rocker Arm Shaft**

INSPECTION AND REPAIR

Make the necessary adjustments, repairs, and part replacements if excessive wear or damage is discovered during inspection.

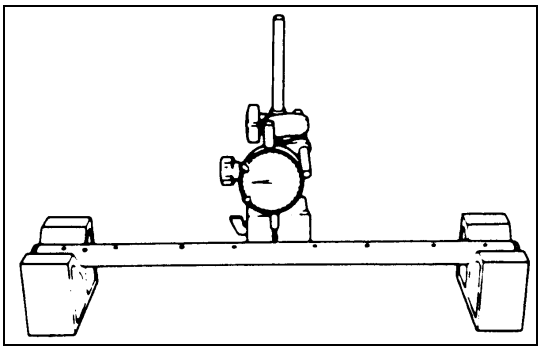
6A20-1.tif

Rocker Arm Shaft Run-Out

1) Place the rocker arm shaft on V-blocks.
2) Use a dial indicator to measure the rocker arm shaft central portion run-out.
   If the run-out is very slight, correct the rocker arm shaft run-out with a bench press. The rocker arm must be at cold condition.
   If the measured rocker arm shaft run-out exceeds the specified limit, the rocker arm shaft must be replaced.

Rocker Arm Shaft Run-Out — mm (in)

Limit	0.3 (0.012)

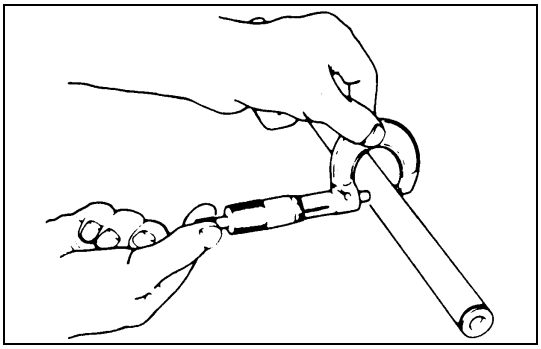
6A20-2.tif

Rocker Arm Shaft Outside Diameter

Use a micrometer to measure the rocker arm fitting portion outside diameter.
If the measured value is less than the specified limit, the rocker arm shaft must be replaced.

Rocker Arm Shaft Outside Diameter — mm (in)

Standard	Limit
21.979 - 22.000 (0.8653 - 0.8661)	21.85 (0.8602)

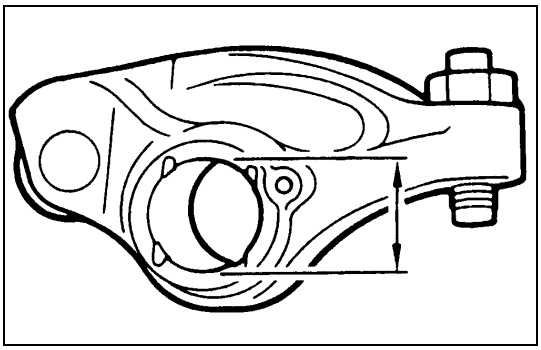
6A20-3.tif

Rocker Arm Bushing Inside Diameter

Use either a vernier caliper or a dial indicator to measure the rocker arm bushing inside diameter.

Rocker Arm Bushing Inside Diameter — mm (in)

Standard	Limit
22.010 - 22.035 (0.8665 - 0.8675)	22.15 (0.8720)

Rocker Arm and Rocker Arm Shaft Clearance — mm (in)

Standard	Limit
0.010 - 0.056 (0.0004 - 0.0022)	0.2 (0.0079)

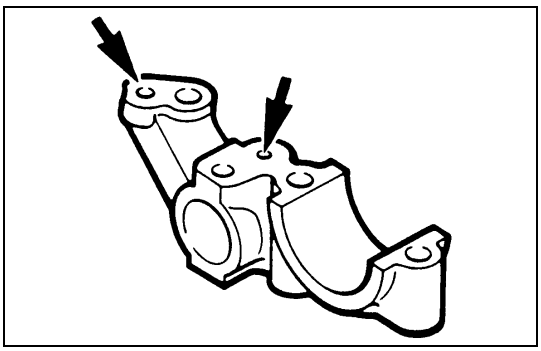
6A20-4.tif

Check to see if the rocker arm oil port is free of obstructions.

If necessary, use compressed air to clean the rocker arm oil port.

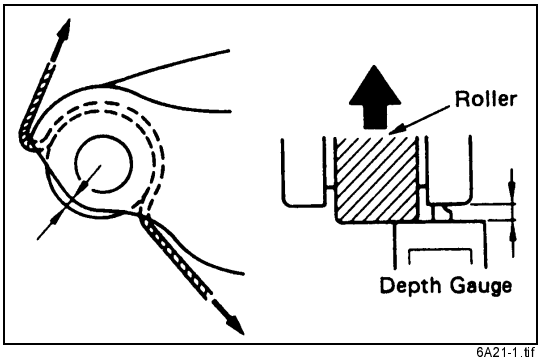

6A21-1.tif

Rocker Arm Roller and Rocker Arm Pin

1) Pass a string through the rocker arm-roller clearance and measure the roller protrusion while pulling both ends of the string in the arrow-indicated directions to push out the roller.
2) Mark the measuring point and draw out the string. Measure the roller protrusion again while the roller is pushed in.
3) Note the difference in the above measurements is the standard roller-rocker arm pin clearance. Should the clearance exceed the limit, replace the rocker arm.

Rocker Arm Roller and Pin Clearance mm (in)

Standard	Limit
0.040 - 0.084 (0.0016 - 0.0033)	0.5 (0.02)

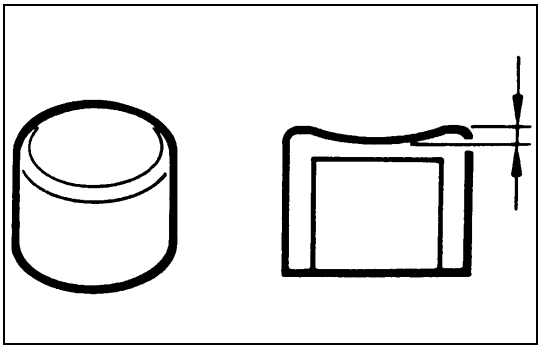
6A21-2.tif

Valve Cap Wear

Inspect the valve cap surface contacting the rocker arm using a dial gauge.

If wear exceeds the limit, replace the valve cap with a new one.

Valve Cap Worn mm (in)

Limit	0.1 (0.004)

REASSEMBLY

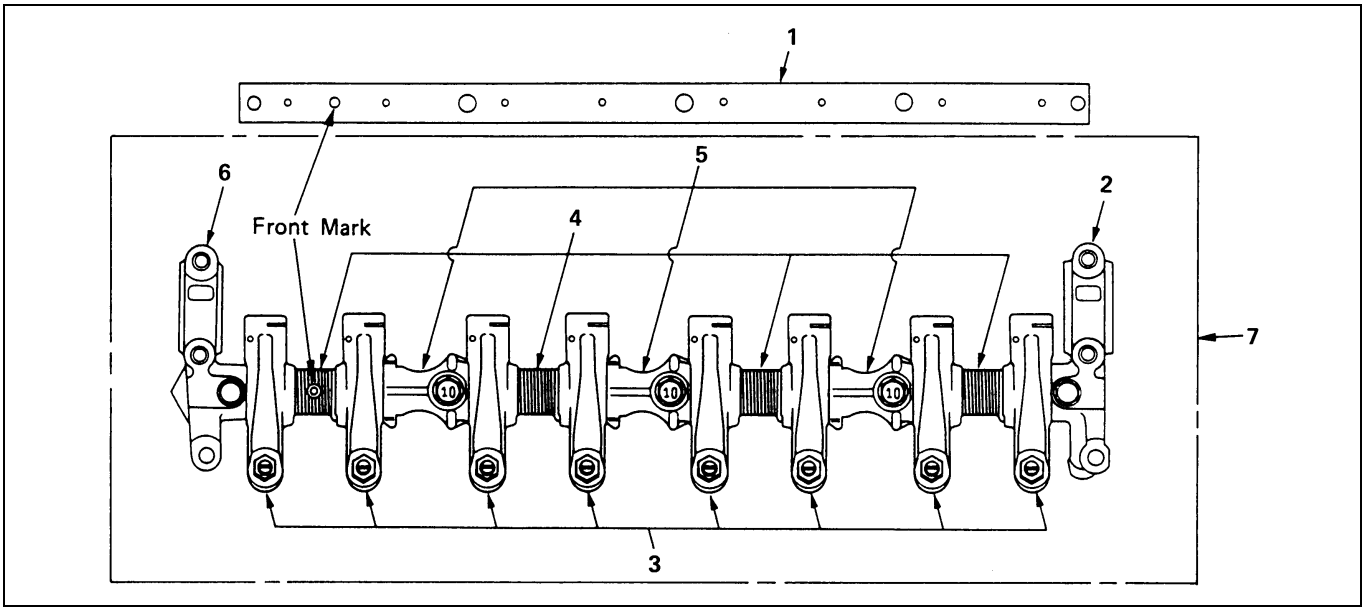

6A21-3.tif

1. **Rocker Arm Shaft**
   1) Use compressed air to thoroughly clean the rocker arm shaft oil holes.
   2) Apply a coat of engine oil to the rocker arm shaft.
   3) Install the rocker arm shaft with the “Front” mark facing up and toward the front of the engine.
2. **Camshaft Bracket**

   Install the camshaft bracket to the rocker arm shaft and temporarily tighten the camshaft bracket fixing bolt as shown in the illustration.

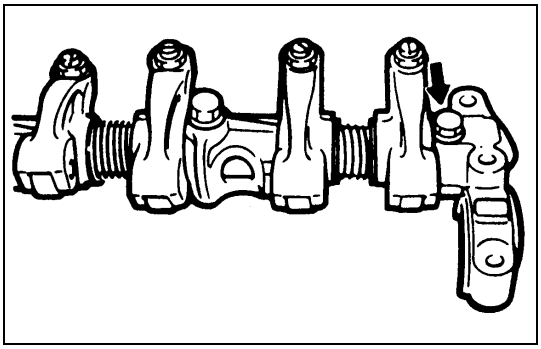

6A22-1.tif

3. **Rocker Arm**

   Apply engine oil to the rocker arm bushing and the roller pin and then install it to the rocker arm shaft.

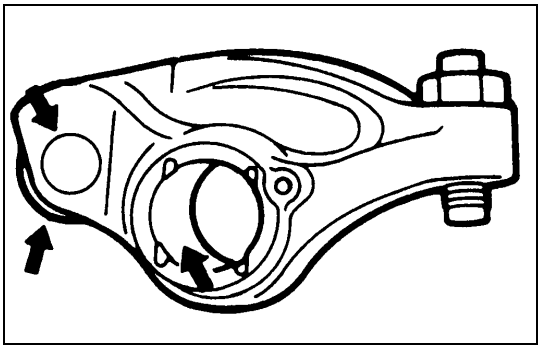

6A22-2.tif

4. **Spring**

   Insert the spring end into the rocker arm.

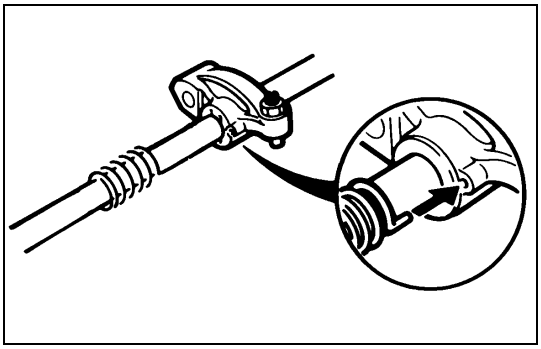

6A22-3.tif

5. **Rocker Arm Bracket**
6. **Camshaft Bracket**

   Temporarily tighten the camshaft bracket fixing bolt.

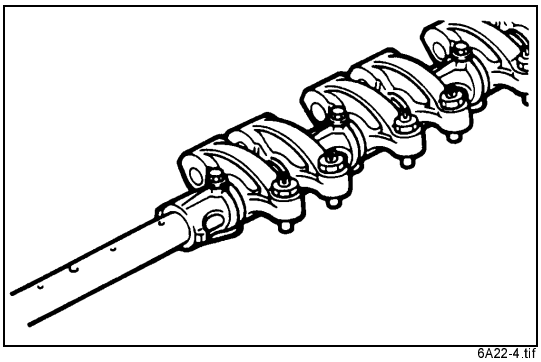

6A22-4.tif

8. **Valve Cap**
7. **Rocker Arm Shaft Assembly**

   Above works refer to “CYLINDER HEAD” section in this manual.

OIL PUMP

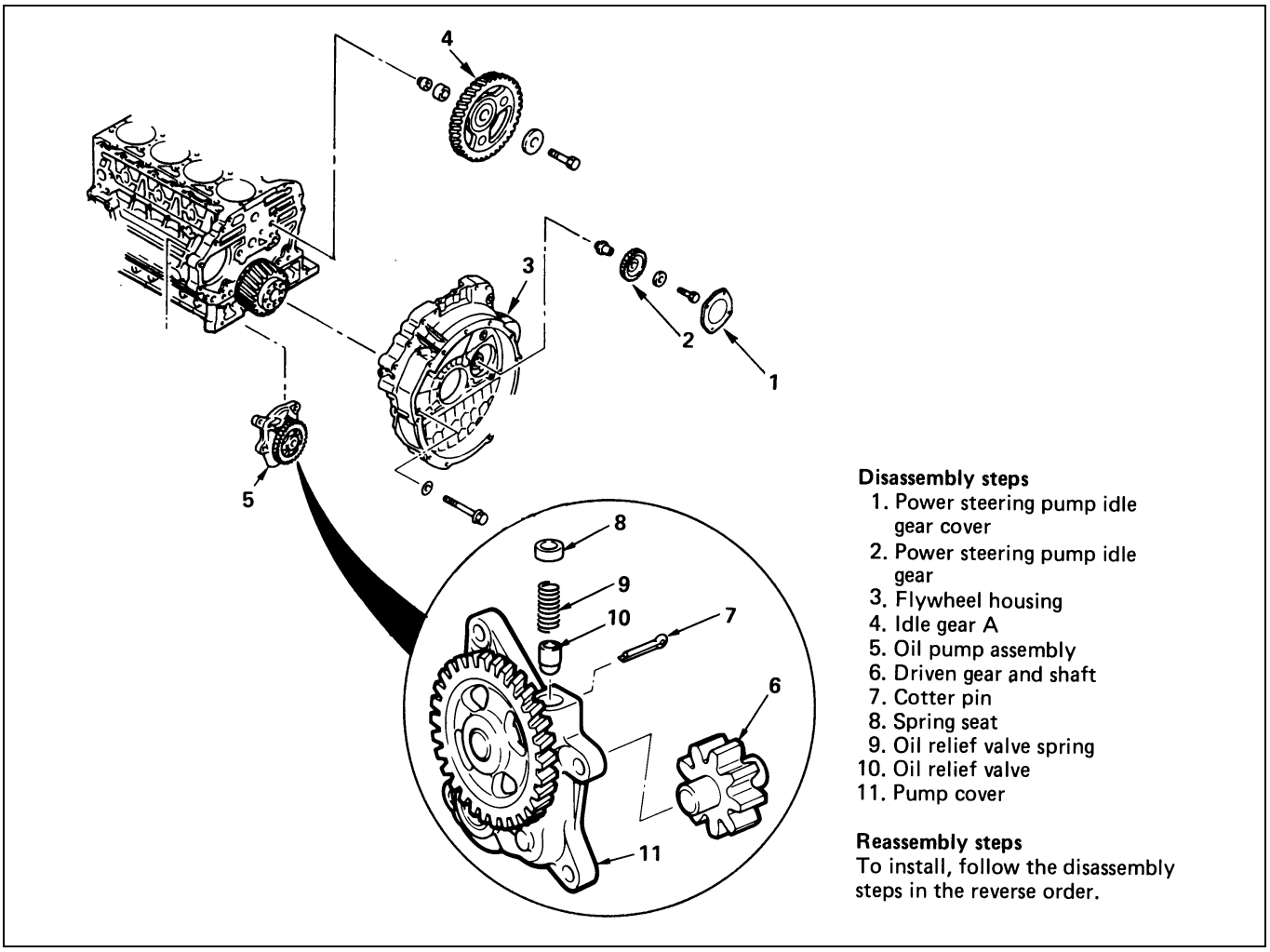

Disassembly steps

1. Power steering pump idle gear cover
2. Power steering pump idle gear
3. Flywheel housing
4. Idle gear A
5. Oil pump assembly
6. Driven gear and shaft
7. Cotter pin
8. Spring seat
9. Oil relief valve spring
10. Oil relief valve
11. Pump cover

Reassembly steps

To install, follow the disassembly steps in the reverse order.

6A23-1.tif

DISASSEMBLY

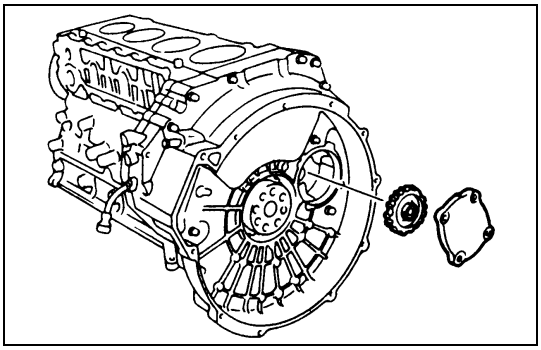

6A23-2.tif

1. **Power Steering Pump Idle Gear Cover**
2. **Power Steering Pump Idle Gear**

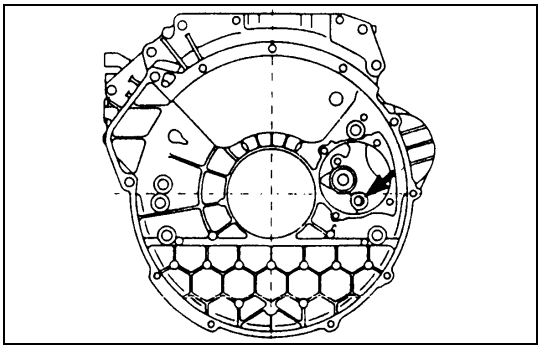

6A24-1.tif

3. **Flywheel Housing**

   NOTE:

   Be careful not to fail to remove the bolts shown in the illustration.

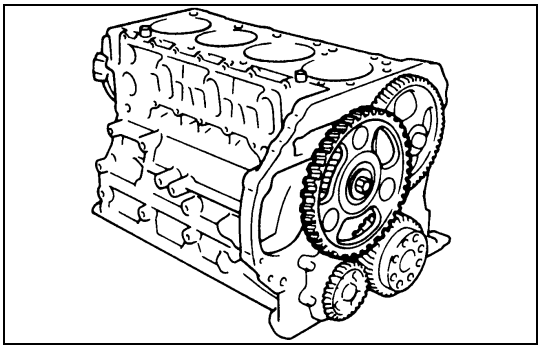

6A24-2.tif

4. **Idle Gear A**

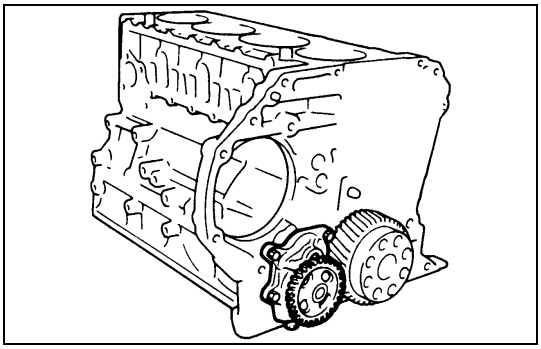

6A24-3.tif

5. **Oil Pump Assembly**

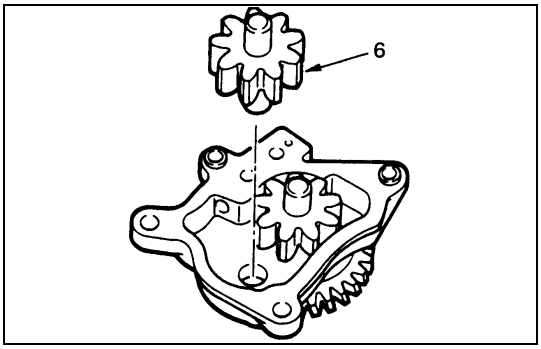

6A24-4.tif

6. **Driven Gear and Shaft**

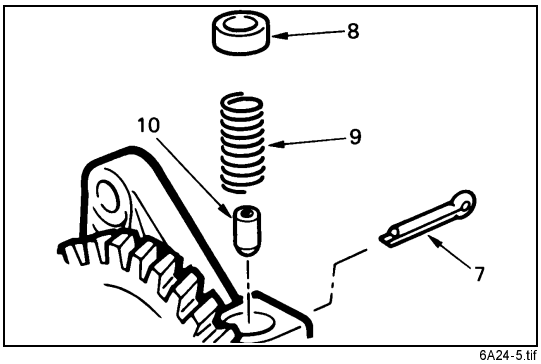

6A24-5.tif

7. **Cotter Pin**
8. **Spring Seat**
9. **Oil Relief Valve Spring**
10. **Oil Relief Valve**
11. **Pump Cover**

INSPECTION AND REPAIR

Make the necessary adjustments, repairs, and part replacements if excessive wear or damage is discovered during inspection.

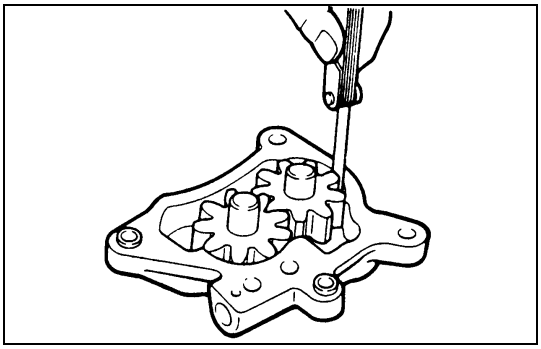

6A25-1.tif

Gear Teeth and Cover Inner Wall Clearance

Use a feeler gauge to measure the clearance between the gear teeth and the cover inner wall.

If the clearance between the gear teeth and the cover inner wall exceeds the specified limit, the oil pump assembly must be replaced.

Gear Teeth and Cover Inner Wall Clearance mm (in)

Standard	Limit
0.125 - 0.220 (0.0049 - 0.0087)	0.3 (0.012)

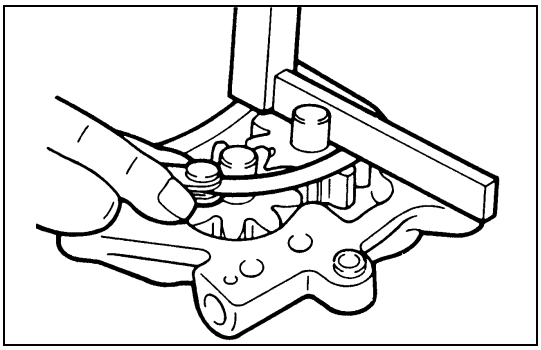

6A25-2.tif

Gear and Cover Clearance

Use a feeler gauge to measure the clearance between the cover and the gear.

If the clearance between the gear and the cover exceeds the specified limit, the oil pump assembly must be replaced.

Gear and Cover Clearance mm (in)

Standard	Limit
0.064 - 0.109 (0.0025 - 0.0043)	0.2 (0.008)

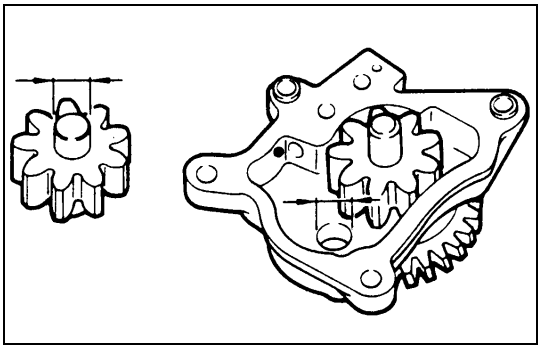

6A25-3.tif

Driven Gear Shaft and Bushing Clearance

1) Use a micrometer to measure the gear shafts outside diameter.

Gear Shaft Outside Diameter mm (in)

Standard	Limit
15.989 - 16.000 (0.6295 - 0.6299)	15.9 (0.626)

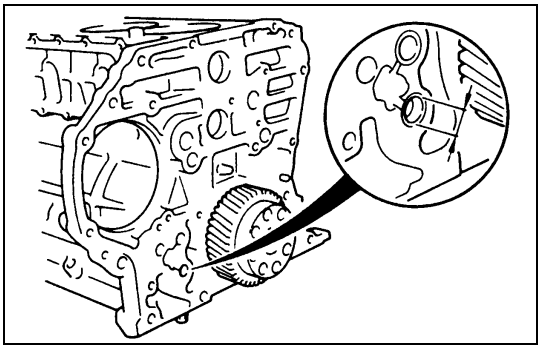

6A25-4.tif

2) Use an inside dial indicator or inside micrometer to measure the pump cover bushing inside diameter and the cylinder body inside diameter.
   If clearance between the gear shaft and the bushing exceeds the specified limit, the oil pump assembly must be replaced.

Gear Shaft and Bushing Clearance mm (in)

Standard	Limit
0.04 - 0.07 (0.0016 - 0.0028)	0.2 (0.012)

REASSEMBLY

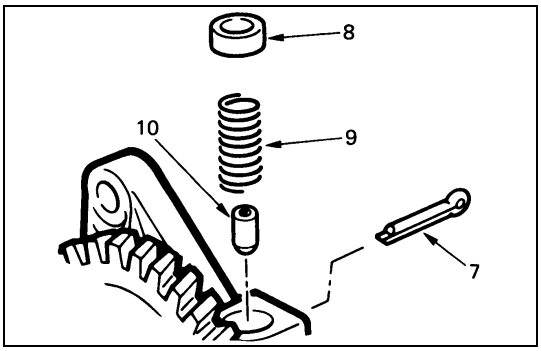

6A26-1.tif

11. Pump Cover
10. Oil Relief Valve
9. Oil Relief Valve Spring
8. Sprig Seat
7. Cotter Pin

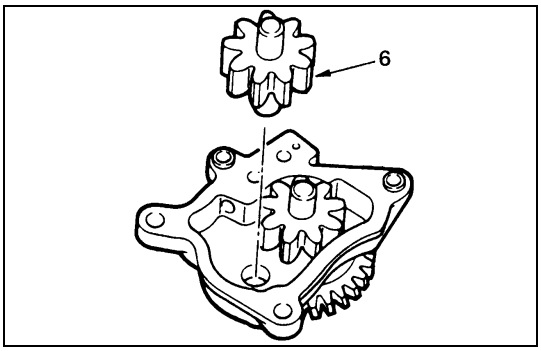

6A26-2.tif

6. Driven Gear and Shaft

Apply the engine oil to the driven gear shaft.

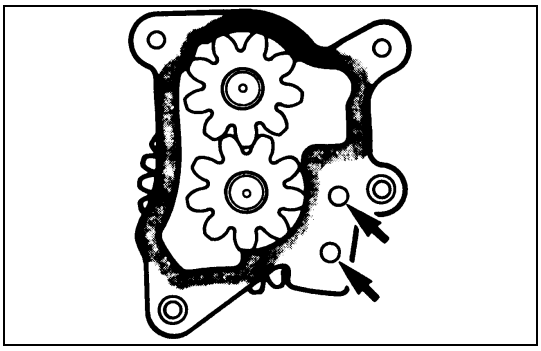
6A26-3.tif

5. Oil Pump Assembly

1) Carefully wipe any foreign material from cylinder body rear surface.
2) Apply the recommended liquid gasket (Three Bond 1141E) or its equivalent to the shaded areas shown in the illustration.

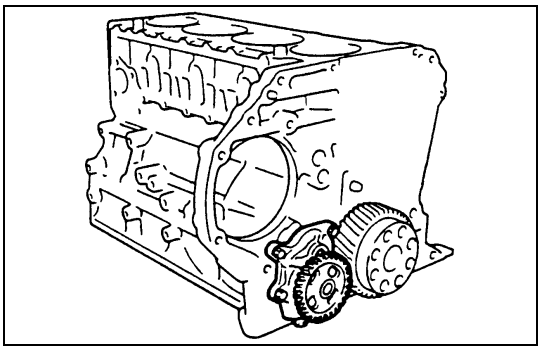
6A26-4.tif

CAUTION:
Be careful that no liquid gasket gets into the holes in the arrow-marked portion in the illustration and the inside of the oil pump cover.

3) Install the oil pump to the cylinder body.
4) Tighten the oil pump to the specified torque.

Oil Pump Bolt Torque	N•m (kg•m/lb•ft)
	31 (3.2/23)

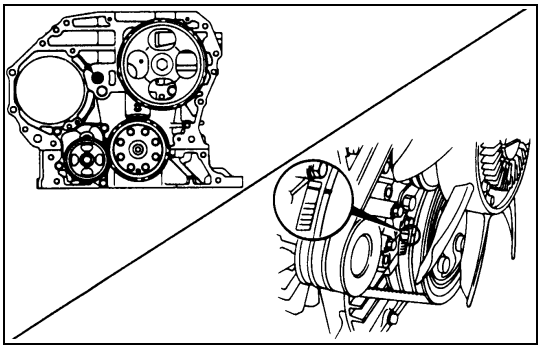

6A27-1.tif

4. Idle Gear A

1) Turn the crankshaft clockwise so that the engagement mark of the crankshaft gear faces to the shaft center of the idle gear A and the No.1 cylinder piston comes to the top dead center.
2) Align the crankshaft gear with the engagement mark of the idle gear and install the idle gear A.

Idle Gear A Bolt Torque	N•m (kg•m/lb•ft)
133 (13.6/98)	

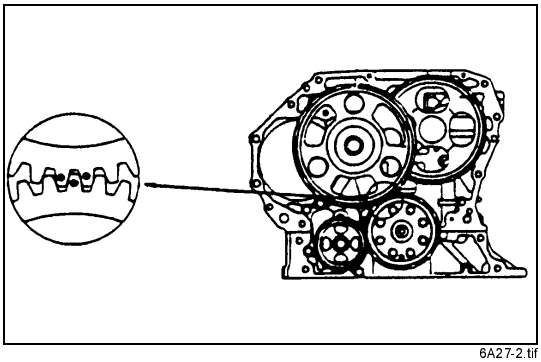

6A27-2.tif

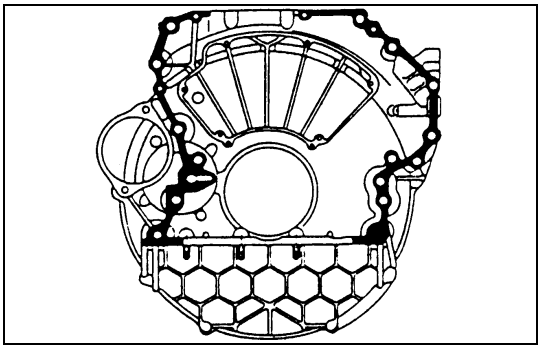

6A27-3.tif

3. Flywheel Housing

1) Carefully wipe any foreign material from the cylinder body rear face.
2) Apply the recommended liquid gasket (Three Bond 1207C) or its equivalent to the shaded areas shown in the illustration.

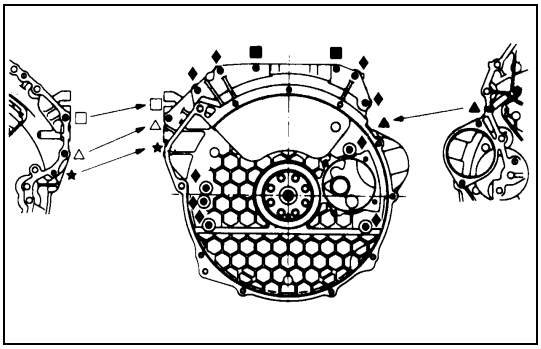

6A27-4.tif

3) Align the cylinder body knock pins with the flywheel housing knock pin holes.
4) Tighten the flywheel housing bolts to the specified torque shown in the illustration.

Flywheel Housing Bolt Torque	N•m (kg•m/lb•ft)
♦:	96 (9.8/71)
★:	48 (4.9/35)
□:	94 (9.6/69)
■:	25 (2.6/19)
△:	76 (7.7/56)
▲:	38 (3.9/28)

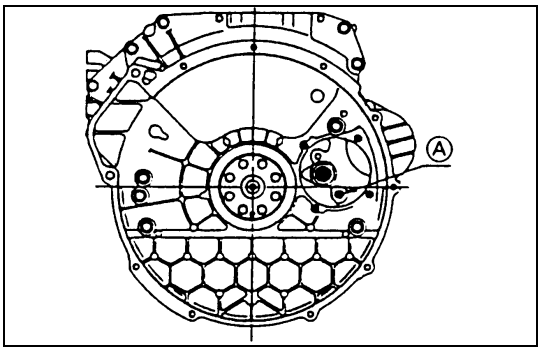

6A27-5.tif

- Tighten the bolts marked with " △ " or " ★ " from the injection pump side, and those with " ▲ " from the cylinder body side.

Flywheel Housing Bolt Torque	N•m (kg•m/lb•ft)
Ⓐ :	96 (9.8/71)

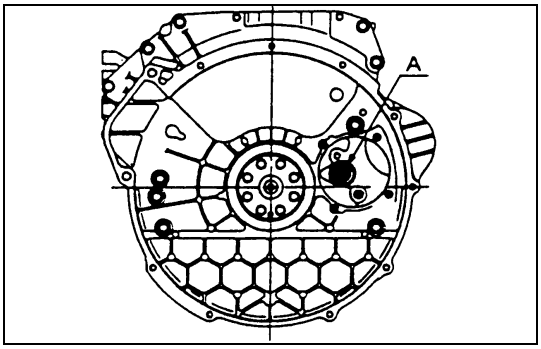

6A28-1.tif

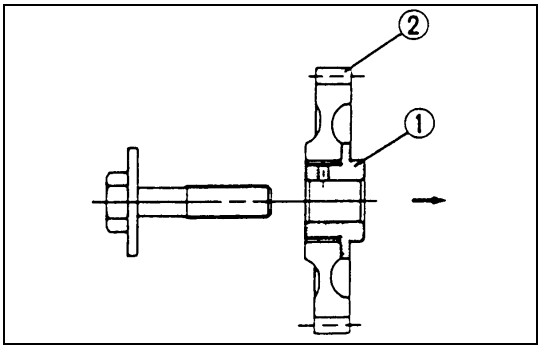

6A28-2.tif

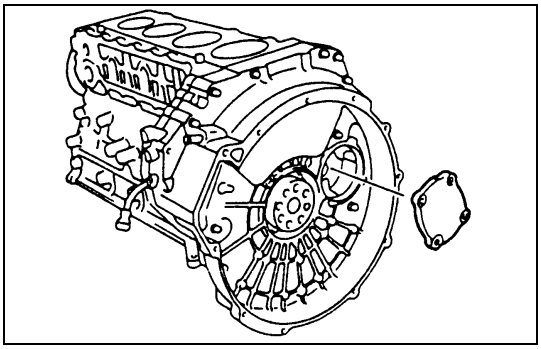

6A28-3.tif

2. Power Steering Pump Idle Gear

1) Apply the engine oil to the idle gear shaft.
2) Install the idle gear shaft ① with the idle gear ② to the cylinder body “A” portion as shown in the illustration.

Idle Gear Shaft Bolt Torque	N•m (kg•m/lb•ft)
133 (13.6/98)	

1. Power Steering Pump Idle Gear Cover

Install the gear cover with the O-ring.

Gear Cover Bolt Torque	N•m (kg•m/lb•ft)
19 (1.9/14)	

CRANKSHAFT

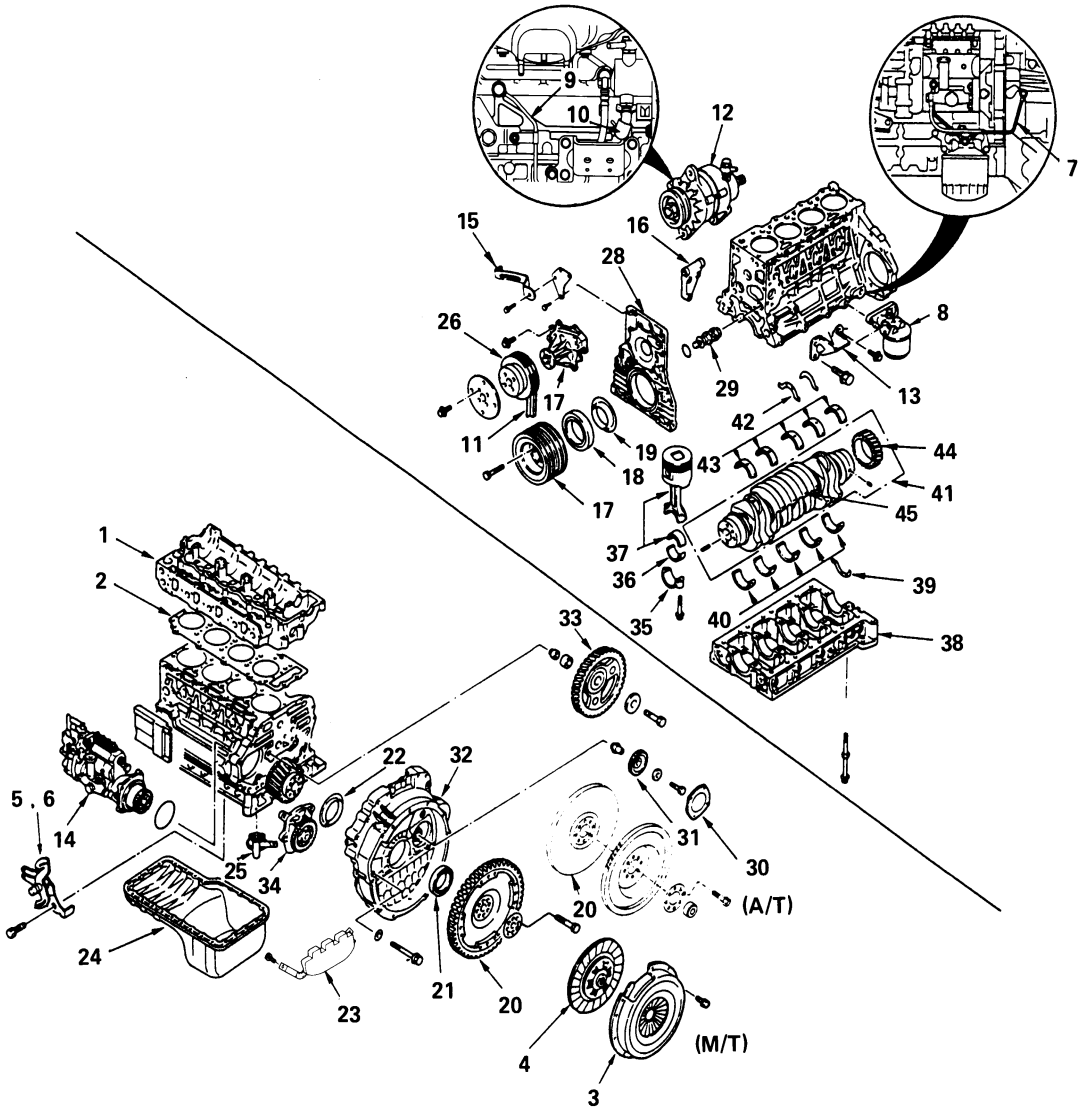

Disassembly steps

1. Cylinder head assembly
2. Cylinder haed gasket
3. Clutch pressure plate assembly
4. Driven plate
5. Engine control wire
6. Engine control lever assembly
7. Oil pipe
8. Oil filter assembly
9. Vacuum pump oil pipe
10. Vacuum pump rubber hose
11. Fan belt
12. Generator
13. Engine foot
14. Injection pump assembly
15. Fan belt adjust plate
16. Generator bracket
17. Crankshaft pulley
18. Crankshaft front oil seal
19. Crankshaft front slinger
20. Flywheel
21. Crankshaft rear oil seal
22. Crankshaft rear slinger
23. Spacer rubber
24. Oil pan
25. Oil pump strainer
26. Water pump pulley
27. Water pump
28. Front retainer
29. Oil thermo valve
30. Power steering pump idle gear cover
31. Power steering pump idle gear
32. Flywheel housing
33. Idle gear A
34. Oil pump assembly
35. Connecting rod cap assembly
36. Connecting rod lower bearing
37. Piston and connecting
38. Crankcase
39. Thrust bearing lower
40. Crankshaft bearibg lower
41. Crankshaft assembly
42. Thrust bearing upper
43. Crankshaft bearing upper
44. Crankshft gear
45. Crankshaft

Reassembly steps

To reassemble, follow the disassembly steps in the reverse order.

6A29-1.tif

DISASSEMBLY

1. **Cylinder Head Assembly**
   Above works refer to “CYLINDER HEAD” section in this manual.
2. **Cylinder Head Gasket**
   CAUTION:
   Do not reuse the cylinder head gasket.
3. **Clutch Pressure Plate Assembly**
4. **Driven Plate**
5. **Engine Control Wire**
6. **Engine Control Lever Assembly**
7. **Oil Pipe**
8. **Oil Filter Assembly**
9. **Vacuum Pump Oil Pipe**
10. **Vacuum Pump Rubber Hose**
11. **Fan Belt**
12. **Generator**
13. **Engine Foot**
14. **Injection Pump Assembly**
15. **Fan Belt Adjust Plate**
16. **Generator Bracket**
    Above works refer to “CYLINDER BLOCK” section in this manual.

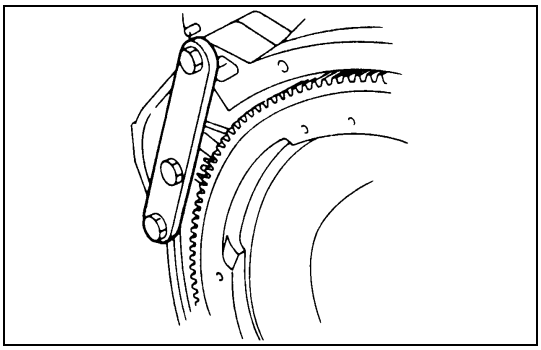

6A30-1.tif

17. **Crankshaft Damper Pulley**
    1) Use the crankshaft stopper to prevent the crankshaft from turning.
       Crankshaft Stopper: 5-8840-2230-0
    2) Loosen the damper pulley bolts and remove the damper pulley.

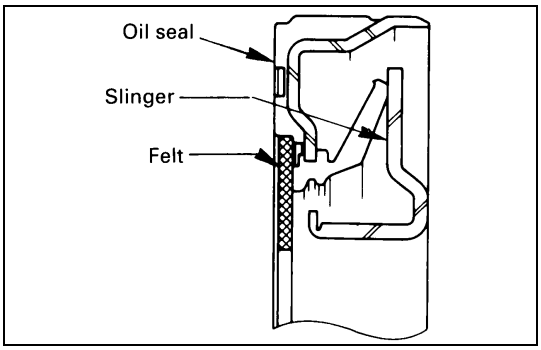

6A30-2.tif

18. **Crankshaft Front Oil Seal**
    CAUTION:
    Be careful not to damage the crankshaft oil seal contact surface during the removal procedure.

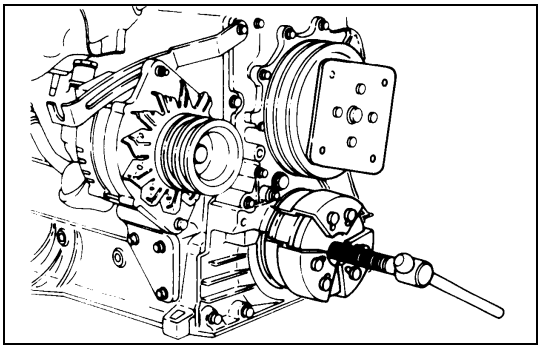

6A31-1.tif

19. Crankshaft Front Slinger

Use the slinger puller to pull out the slinger.

Slinger Puller: 5-8840-2360-0

NOTE:

If the oil seal has been removed, both the oil seal and slinger must be replaced as a set.

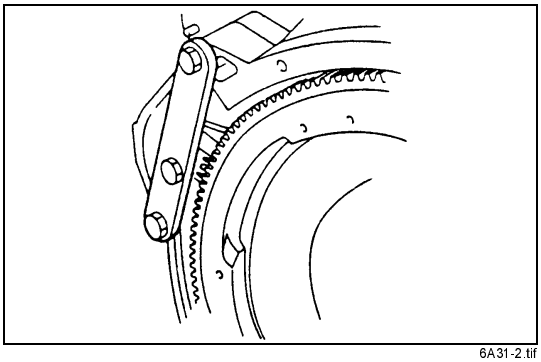

6A31-2.tif

20. Flywheel Assembly

1) Use the crankshaft stopper to prevent the crankshaft from turning

Crankshaft Stopper: 5-8840-2230-0

2) Loosen the flywheel bolts in numerical order a little at a time as shown in the illustration.
3) Remove the flywheel stopper and the flywheel assembly.

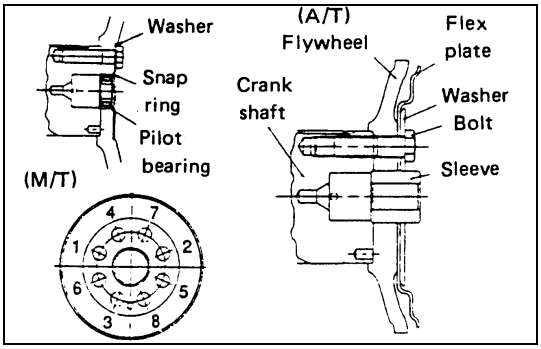

6A31-3.tif

For the A/T vehicle, loosened the flywheel fixing bolts, and remove the washer, the flexible plate, the flywheel and the sleeve in this order.

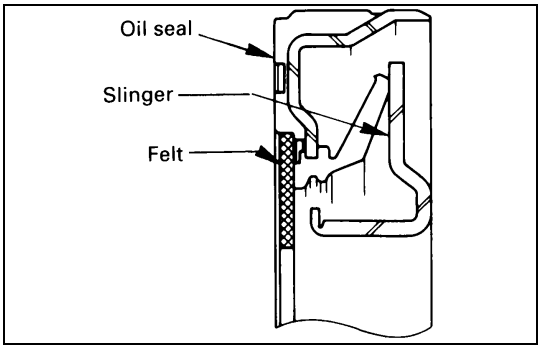

6A31-4.tif

21. Crankshaft Rear Oil Seal

CAUTION:

Be careful not to damage the crankshaft oil seal contact surface during the removal procedure.

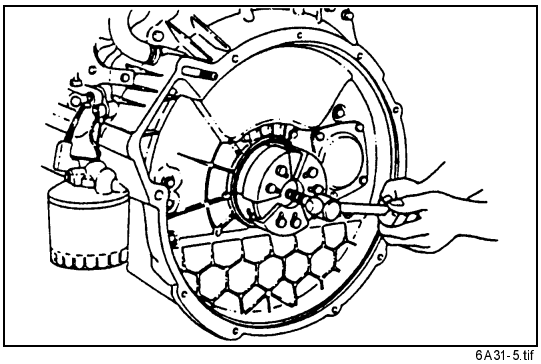

6A31-5.tif

22. Crankshaft Rear Slinger

Use the slinger puller to pull out the slinger.

Slinger Puller: 5-8840-2360-0

23. Spacer Rubber (NKR model only)

24. Oil Pan

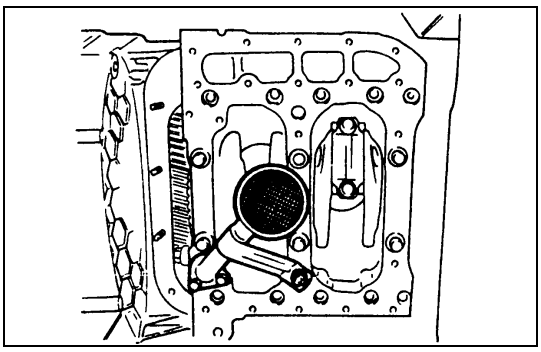

6A32-1.tif

25. Oil Pump Strainer
26. Water Pump Pulley
27. Water Pump

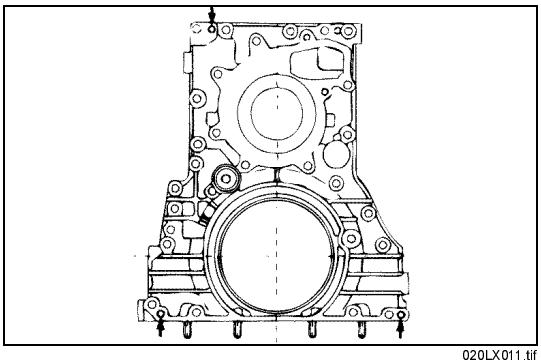

020LX011.tif

28. Front Retainer

Install the three front retainer fixing bolts to the front retainer replacer holes as shown in the illustration, and tighten the bolts alternately a little at a time.

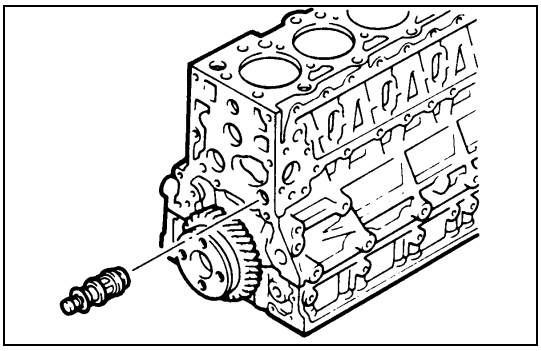

6A32-3.tif

29. Oil Thermo Valve (4HF1, 4HF1-2, 4HG1, 4HG1-T)

Pull out the thermo valve from the cylinder body.

29-1. Bypass Valve (4HE1-T, 4HE1-TC)

Pull out the bypass valve from the cylinder body.

30. Power Steering Pump Idle Gear Cover
31. Power Steering Pump Idle Gear
32. Flywheel Housing
33. Idle Gear A
34. Oil Pump Assembly

Above works refer to “OIL PUMP” section in this manual.

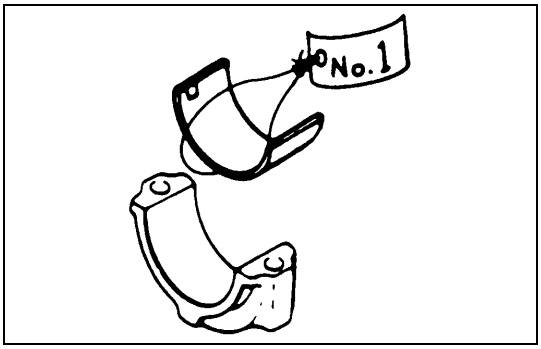

6A33-1.tif

35. Connecting Rod Cap

36. Connecting Rod Lower Bearing

1) Take out the connecting rod bearing cap bolts and remove the bearing cap with the lower bearing.
2) If the connecting rod lower bearings are to be reinstalled, mark their fitting positions by tagging each bearing with the cylinder number from which it was removed.

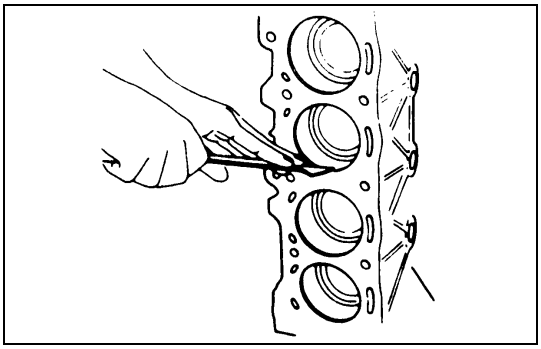

6A33-2.tif

37. Piston and Connecting Rod Assembly

1) To facilitate smooth removal of piston, remove carbon from the upper part of the cylinder wall using a scraper or equivalent.
2) Remove the piston and connecting rod assembly upward by pushing on the edge of the connecting rod with a hammer handle or equivalent.
3) If the connecting rod bearing are to be reinstalled, mark their fitting positions by tagging each bearing with the cylinder number from which it was removed.

CAUTION:

Do not bend or damage the oiling jet.

NOTE:

When removing the piston and connecting rod assembly, pull the connecting rod in parallel with the cylinder bore.

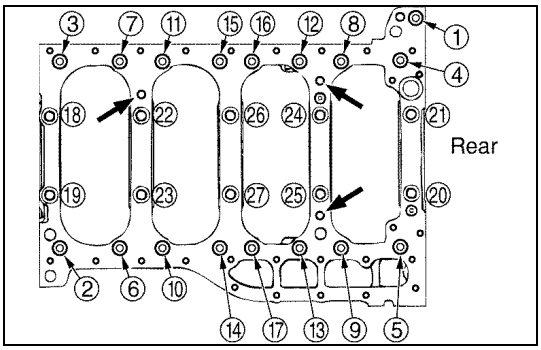

020LX018.tif

38. Crankcase

1) Loosen the crankcase bolts in numerical order a little at a time.
2) Install the three crankcase fixing bolts (See left arrow marks) to the crankcase replacer holes as shown in the illustration, and tighten the bolts alternate a little at a time.

NOTE:

When removing the crankcase, be sure to remove the oil pump and the generator bracket before that.

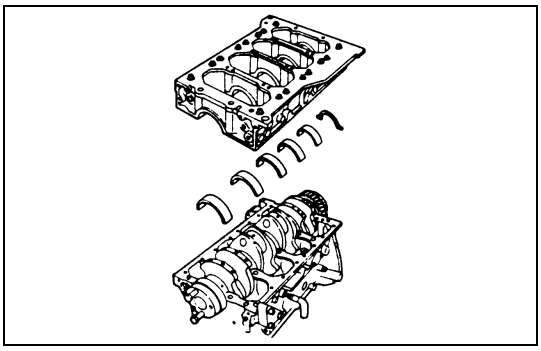

6A33-4.tif

39. Thrust Bearing Lower

40. Crankshaft Bearing Lower

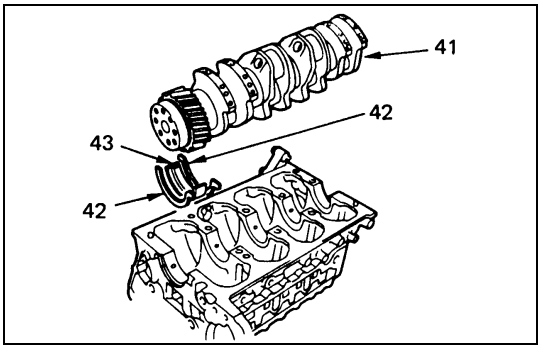

6A34-1.tif

41. Crankshaft Assembly
42. Thrust Bearing Upper
43. Crankshaft Bearing Upper

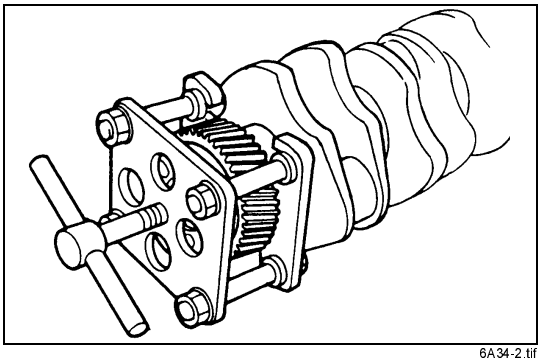
6A34-2.tif

44. Crankshaft Gear

1) Use the crankshaft gear remover to remove the crankshaft gear.
   Crankshaft Gear Remover: 8-9439-6818-0
2) Remove the crankshaft feather key.

45. Crankshaft

INSPECTION AND REPAIR

Make the necessary adjustments, repairs, and part replacements if excessive wear or damage is discovered during inspection.

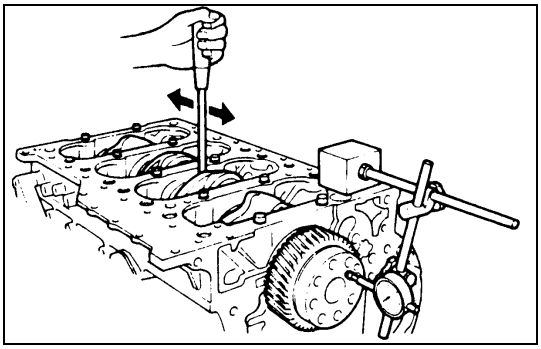
6A34-3.tif

Crankshaft End Play

1) Set the dial indicator to the crankshaft end and measure the end play.
2) If the measured value exceeds the specified limit, the thrust bearings must be replaced.

Crankshaft End Play — mm (in)

Standard	Limit
0.104 - 0.205 (0.0041 - 0.0081)	0.35 (0.014)

CRANKSHAFT AND BEARING

Inspect the surface of the crankshaft journals and crankpins for excessive wear and damage.

Inspect the oil seal fitting surfaces for excessive wear and damage.

Inspect the oil ports for obstructions.

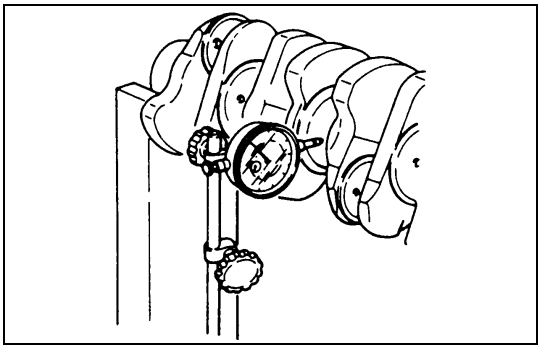

6A35-1.tif

Crankshaft Run-Out

1) Set a dial indicator to the center of the crankshaft journal.
2) Gently turn the crankshaft in the normal direction of rotation.

Read the dial indicator as you turn the crankshaft.

If the measured value exceeds the specified limit, the crankshaft must be replaced.

Crankshaft Run-Out mm (in)

Standard	Limit
0.05 (0.002) or less	0.30 (0.012)

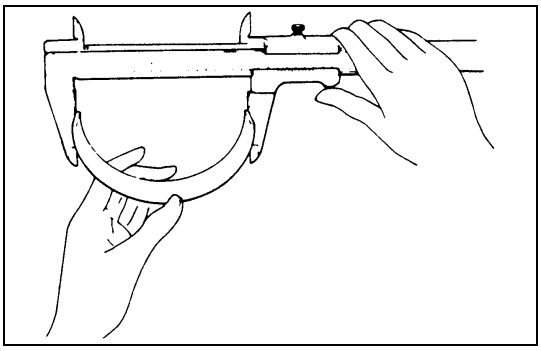

6A35-2.tif

Bearing Spread

Use a vernier caliper to measure the bearing spread.

If the measured value is less than the specified limit, the bearing must be replaced.

Bearing Spread mm (in)

Limit	87 (3.43)

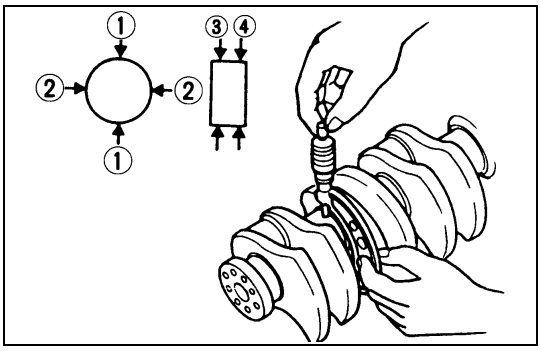

6A35-3.tif

Crankshaft Journal and Crankpin Diameter

1) Use a micrometer to measure the crankshaft journal diameter across points ① - ① and ② - ②.
2) Use the micrometer to measure the crankshaft journal diameter at the two points ③ and ④.
3) Repeat Steps 1 and 2 to measure the crankpin diameter.

   If the measured values are less than the limit, the crankshaft must be reground or replaced.

Crankshaft Journal and Crankpin Diameter mm (in)

Engine model		Standard	Limit
ALL	No.1,2,4 and 5 Journal	81.905 - 81.925 (3.2246 - 3.2254)	81.85 (3.2224)
ALL	No.3 Journal	81.891 - 81.911 (3.2240 - 3.2248)	81.85 (3.2224)
Except 4HE1-T 4HE1-TC	Crankpin	65.902 - 65.922 (2.5946 - 2.5954)	65.85 (2.5925)
4HE1-T 4HE1-TC	Crankpin	72.902 - 72.922 (2.8702 - 2.8433)	72.85 (2.8681)

Crankshaft Journal and
Crankpin Diameter Uneven Wear mm (in)

Except 4HE1-T, 4HE1-TC	Limit	0.050 (0.002)
4HE1-T, 4HE1-TC		0.0050 (0.0002)

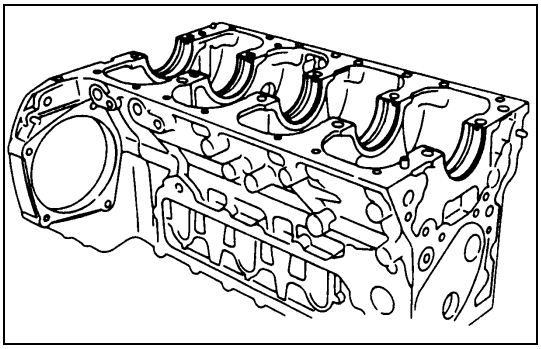

6A36-1.tif

Crankshaft Journal and Bearing Clearance

1) Clean the cylinder body and crankcase, the journal bearing fitting surface, and the journal bearings.
2) Install the bearings to the cylinder body and crankcase.
3) Install the crankcase to the cylinder body.

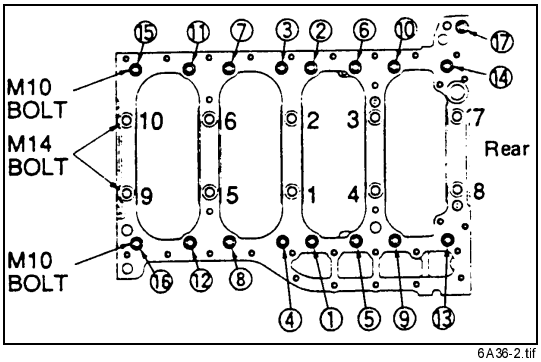

6A36-2.tif

4) Tighten the crankcase to the specified torque in the numerical order shown in the illustration.

Crankcase Bolt Torque(M14: 1~10) N•m (kg•m/lb•ft)

1st step	2nd step	3rd step
98 (10/72)	132 (13.5/98)	30° - 60°

Crankcase Bolt Torque(M10:①~⑰) N•m (kg•m/lb•ft)

37 (3.8/27)

5) Use a dial indicator to measure the crankshaft journal inside diameter.
6) If the clearance between the crankshaft journal and the bearing exceeds the specified limit, the crankshaft must be either reground or replaced.

Crankshaft Journal and
Bearing Clearance mm (in)

	Standard	Limit
No.1, 2, 4 and 5 Journal	0.037 - 0.072 (0.0015 - 0.0028)	0.11 (0.0043)
No.3 Journal	0.051 - 0.086 (0.0020 - 0.0034)	0.11 (0.0043)

7) Remove the crankcase and the bearings.

Undersized Crankshaft Journal Bearing
Availability (Except 4HE1-T, 4HE1-TC) mm (in)

0.25 (0.01)	0.50 (0.02)

Crankshaft Bearing Selection

Refer to the following table when replacing the crankshaft and/or the crankshaft bearings.

Crankshaft bearing selection is based on the measured diameters of the crankshaft journals and the bearing housing.

Match the crankshaft bearing housing grade marks and the crankshaft journal grade marks in the table below to determine the correct crankshaft bearing size.

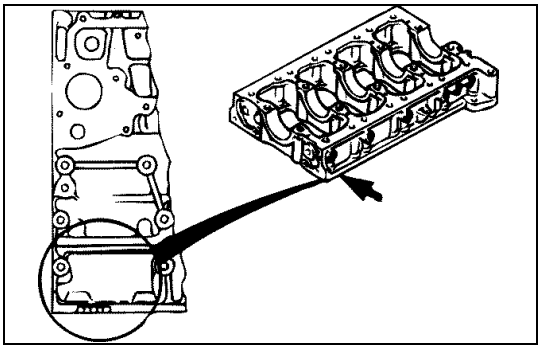

015LX073.tif

Crankshaft Bearing Insert Grade Mark Position

The crankshaft bearing housing grade marks (1 or 2) are stamped collectively for all cylinders on the underside of the left front portion of the crankcase.

Example:

1	2	1	1	2
↑	↑	↑	↑	↑
No.1 Bearing Housing	No. 2 Bearing Housing	No. 3 Bearing Housing	No. 4 Bearing Housing	No. 5 Bearing Housing

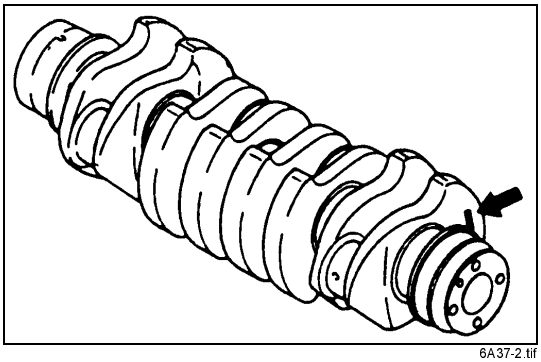

6A37-2.tif

Crankshaft Journal Grade Mark Position

The crankshaft journal grade marks (1 or 2) are stamped collectively for all cylinders on the front side of the crankshaft No.1 balancer.

The clearance between the crankshaft journal and the bearing must be the same for each position after installation of the crankshaft and the crankshaft bearings.

Example:

2	1	2	2	1
↑	↑	↑	↑	↑
No.1 Journal	No.2 Journal	No.3 Journal	No.4 Journal	No.5 Journal

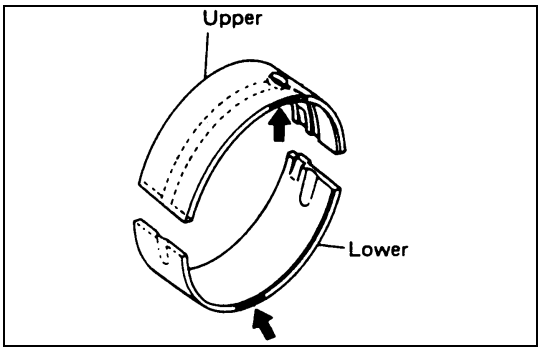

6A37-3.tif

Crankshaft Bearing Combination (Reference) mm (in)

Bearing Housing		Crankshaft Journal No.1, 2, 4, 5		Crankshaft Bearing	Oil Clearance
Grade Mark	Diameter	Grade Mark	Diameter	Color Code	
1	87.000 - 87.009 (3.4252 - 3.4255)	1	81.905 - 81.915 (3.2246 - 3.2250)	Black	0.039 - 0.070 (0.0015 - 0.0028)
		2	81.916 - 81.925 (3.2250 - 3.2254)	Brown	0.037 - 0.068 (0.0015 - 0.0027)
2	87.010 - 87.019 (3.4256 - 3.4259)	1	81.905 - 81.915 (3.2246 - 3.2250)	Blue	0.041 - 0.072 (0.0016 - 0.0028)
		2	81.916 - 81.925 (3.2250 - 3.2254)	Black	0.039 - 0.070 (0.0015 - 0.0028)

Bearing Housing		Crankshaft Journal No.3		Crankshaft Bearing	Oil Clearance
Grade Mark	Diameter	Grade Mark	Diameter	Color Code	
1	87.000 - 87.009 (3.4252 - 3.4255)	1	81.890 - 81.900 (3.2240 - 3.2244)	Black	0.053 - 0.084 (0.0021 - 0.0033)
		2	81.901 - 81.910 (3.2244 - 3.2248)	Brown	0.051 - 0.082 (0.0020 - 0.0032)
2	87.010 - 87.019 (3.4256 - 3.4259)	1	81.890 - 81.900 (3.2240 - 3.2244)	Blue	0.055 - 0.086 (0.0022 - 0.0034)
		2	81.901 - 81.910 (3.2244 - 3.2248)	Black	0.053 - 0.084 (0.0021 - 0.0033)

Crankpin and Connecting Rod Bearing Clearance

1) Clean the crankshaft, the connecting rod, the bearing cap, and the bearings.
2) Install the bearing to the connecting rod and the bearing cap.
3) Apply a coat of molybdenum disulfide grease to the bearing cap bolt threads and setting faces.
4) Prevent the connecting rod from moving.
5) Tighten the bearing cap to the specified torque.

Connecting Rod Bearing Cap Bolt Torque — N•m (kg•m/lb•ft)

1st step	2nd step	3rd step
39 (4.0/29)	60°	30°

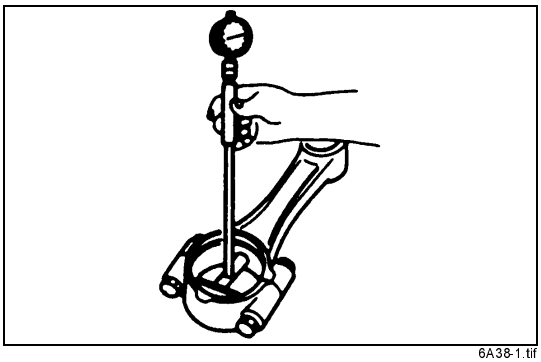
6A38-1.tif

6) Use the dial indicator to measure the connecting rod bearing inside diameter.

Crankpin and Connecting Rod Bearing Clearance — mm (in)

Standard	Limit
0.036 - 0.077 (0.0014 - 0.0030)	0.10 (0.004)

7) If the clearance between the measured bearing inside diameter and the crankpin exceeds the specified limit, the bearing and/or the crankshaft must be replace or reground. (Except 4HE1-T, 4HE1-TC)
8) Remove the bearing cap and the bearings.

Undersized Connecting Rod Bearing Availability — mm (in)

0.25 (0.01)	0.50 (0.02)

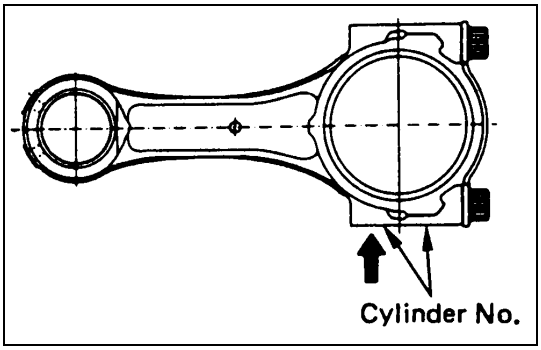

6A38-2.tif

Connecting Rod Bearing Selection

Refer to the following table when installing or replacing the connecting rod bearings.

Pay close attention to the size mark on the big end of the connecting rod.

Do not confuse the size mark on the big end of connecting rod with the alignment cylinder No. mark.

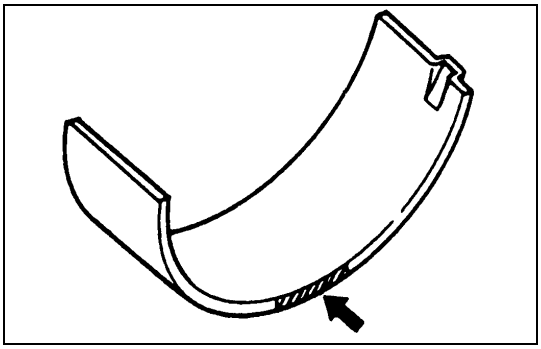

6A39-1.tif

Connecting Rod Bearing Combination mm (in)

Engine Model	Connecting Rod Big End		Crankpin	Connecting Rod Bearing	Oil Clearance
	Grade Mark	Diameter	Diameter	Color Code	
4HF1 4HF1-2 4HG1 4HG1-T	A	69.985 – 69.992 (2.7553 – 2.7556)	65.902 – 65.992 (2.5946 – 2.5954)	Green	0.036 - 0.077 (0.0014 - 0.0030)
	B	69.993 – 70.000 (2.7556 – 2.7559)	65.902 – 65.922 (2.5946 - 2.5954)	Yellow	0.036 - 0.070 (0.0014 - 0.0030)
4HE1-T 4HE1-TC	A	77.985 – 77.992 (3.0703 - 3.0705)	72.902 – 72.922 (2.8702 - 2.8709)	Green	0.037 - 0.077 (0.0015 - 0.0030)
	B	77.993 - 78.000 (3.0706 - 3.0709)		Yellow	

Clearance Measurements (With Plastigage)

Crankshaft Journal and Bearing Clearance

1) Clean the cylinder body and crankcase, the journal bearing fitting surface, and the journal bearings.
2) Install the bearings to the cylinder body and crankcase.
3) Carefully place the crankshaft on the bearings.
4) Rotate the crankshaft approximately 30 degrees to seat the bearing.

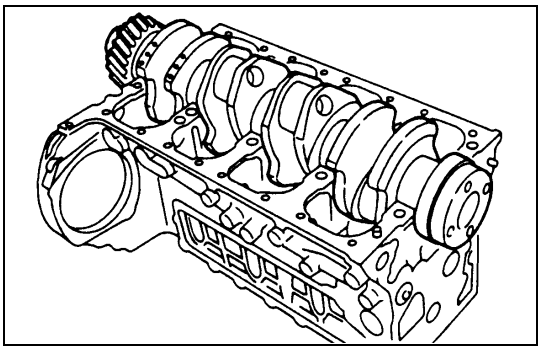

6A39-2.tif

5) Place the Plastigage (arrow) over the crankshaft journal across the full width of the bearing.

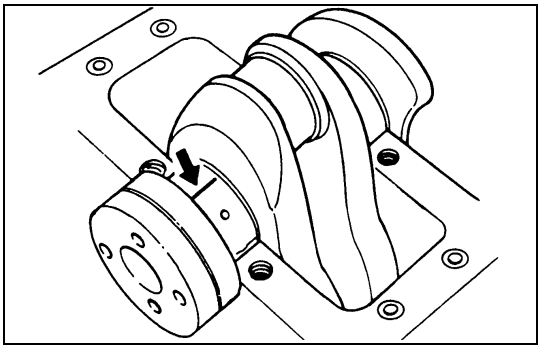

6A39-3.tif

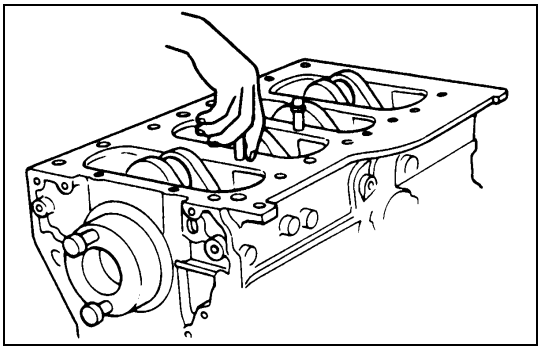

6A39-1.tif

6) Install the crankcase to the cylinder body.

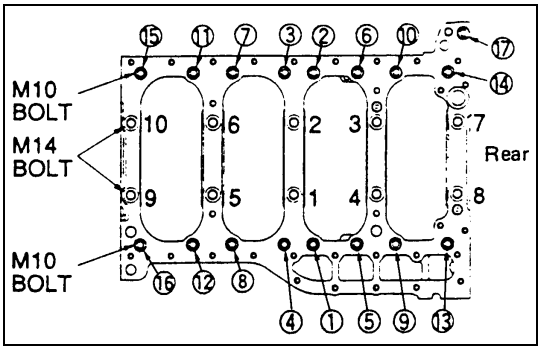

6A40-1.tif

7) Tighten the crankcase to the specified torque in the numerical order shown in the illustration.

Crankcase Bolt Torque (M14: 1~10) N•m (kg•m/lb•ft)

1st step	2nd step	3rd step
98 (10/72)	132 (13.5/98)	30° - 60°

Crankcase Bolt Torque (M10: ① ~ ⑰) N•m (kg•m/lb•ft)

3.9 ± 0.7 (28 ± 5/38 ± 7)

Do not allow the crankshaft to turn during bearing cap installation and tightening.

8) Remove the bearing beam and the crankcase with bearings.

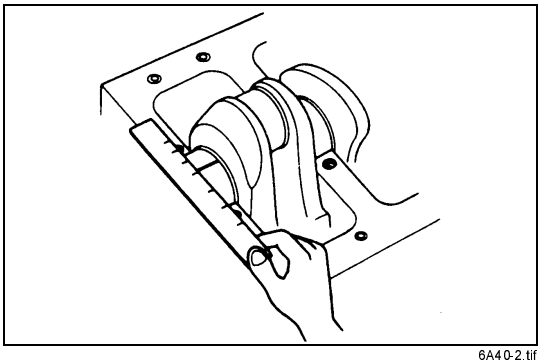

6A40-2.tif

9) Compare the width of the Plastigage attached to either the crankshaft or the bearing with the scale printed on the Plastigage container.

Crankshaft Journal and Bearing Clearance mm (in)

	Standard	Limit
No.1, 2, 4 and 5 Journal	0.037 - 0.072 (0.0015 - 0.0028)	0.11 (0.0043)
No.3 Journal	0.051 - 0.086 (0.0020 - 0.0034)	0.11 (0.0043)

10) If the measured value exceeds the limit, perform the following additional steps.
- Use a micrometer to measure the crankshaft outside diameter.
- Use an inside dial indicator to measure the bearing inside diameter.

  If the crankshaft journal and bearing clearance exceeds the limit, the crankshaft and/or the bearing must be reground (Except 4HE1-T, 4HE1-TC) or replaced.

Undersized Crankshaft Journal
Bearing Availability (Except 4HE1-T, 4HE1-TC) mm (in)

0.25 (0.01)	0.50 (0.02)

11) Remove the crankshaft and bearings.

Crankpin and Connecting Rod Bearing Clearance

1) Clean the crankshaft, the connecting rod, the bearing cap, and the bearings.
2) Install the bearing to the connecting rod and the bearing cap.
   Do not allow the crankshaft to move when installing the bearing cap.
3) Prevent the connecting rod from moving.
4) Attach the Plastigate to the crankpin.
   Apply engine oil to the Plastigate to keep it from falling.

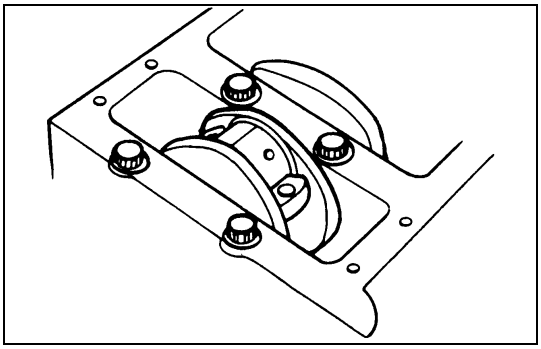

6A41-1.tif

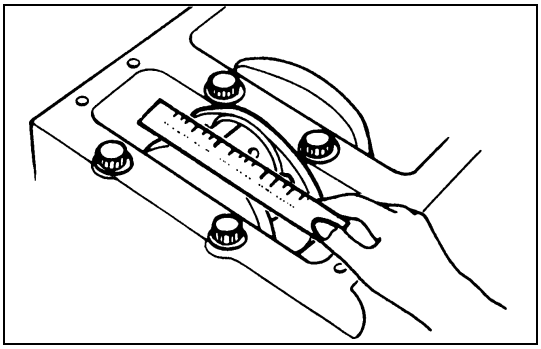

6A41-2.tif

5) Apply a coat of molybdenum disulfide grease to the bearing cap bolt threads and setting faces.
6) Install the bearing cap and tighten it to the specified torque
   Do not allow the connecting rod to move when installing and tightening the bearing cap.

Connecting Rod Bearing
Cap Bolt Torque — N•m (kg•m/lb•ft)

1st step	2nd step	3rd step
39(4.0/29)	60°	30°

7) Remove the bearing cap.
8) Compare the width of the Plastigate attached to either the crankshaft or the bearing against the scale printed on the Plastigage container.

Crankpin and Connecting Rod
Bearing Clearance — mm (in)

Standard	Limit
0.036 – 0.077 (0.0014 – 0.0030)	0.10 (0.004)

9) If the measured value exeeds the specified limit, perform the following additional steps.
   - Use a micrometer to measure the crankpin outside diameter.
   - Use an inside dial indicator to measure the bearing inside diameter.
     If the clearance between the crankpin and the bearing exceeds the specified limit, the cranksharft and / or the bearing must be reground (except 4HE1-T, 4HE1-TC) or replaced.

Undersized Connecting Rod
Bearing Availability (Except 4HE1-T, 4HE1-TC) mm (in)

0.25 (0.01)	0.50 (0.02)

Crankshaft Regrinding (Except 4HE1-T, 4HE1-TC)

To ensure crankshaft reliability, pay close attention to the following items during and after the crankshaft journal and crankpin regrinding procedure.

Undersized Bearing Availiability mm (in)

0.25 (0.01)	0.50 (0.02)

Crankshaft Journal and Crankpin
Grinding Limit (Reference) mm (in)

Journal	No.1, 2, 4, 5	81.405 (3.2049)
	No.3	81.390 (3.2043)
Crankpin		65.402 (2.5749)

Crankshaft Regrinding Procedure (Except 4HE1-T, 4HE1-TC)

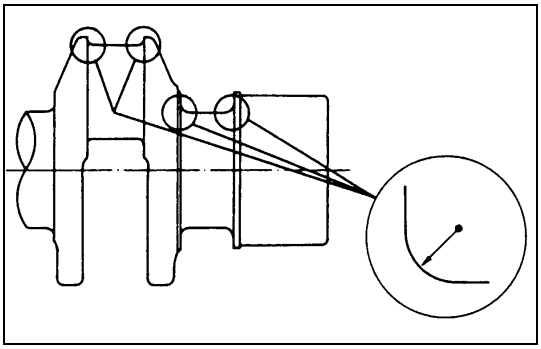

6A42-1.tif

1) Regrind the crankshaft journals and the crankpins
2) Fillet the crankshaft journals and the crankpin radiuses to a minimum of R 4.8 ± 0.2mm (0.189 ± 0.0078 in). There must be no stepping around the fillet area.
3) Finish the crankshaft journals, the crankpins, and the oil port corners to a smooth surface having a chamfer radius of 1 mm (0.04 in).

Crankshaft Journal and Crankpin Roughness

0.4 μ or less

4) Check the crankshaft journal and crankpin clearance. Refer to the “Crankshaft Journal and Bearing Clearance” and “Crankpin and Connecting Rod Bearing Clearance.”
5) Check the crankshaft run-out. Refer to the “Crankshaft Run-Out.”

CAUTION:

The crankshaft for 4HE1-T and 4HE1-TC are applied soft nitrided surface (Taftriding).
Therefore, the crankshaft for 4HE1-T and 4HE1-TC not could be ground.

Inspection procedure for soft nitrided (Taftriding) crankshaft (For 4HE1-T, 4HE1-TC)

1. Inspect the crankshaft following points.
   - Excessive wear and damage on the surface of crankshaft journals.
   - Excessive wear and damage on the surface of crankpin.
   - Excessive wear and damage on the oil seal fitting surface.
   - Inspect the oil ports foe obstructions.
2. Inspect the crankshaft soft nitrided surface (Taftriding).

   The soft nitrided crankshaft has been applied to increase crankshaft strength.

   Becase of this, it is not possible to regrind the crankshaft surfaces.

   2.1. Inspection conditions.
   - Remove the oil and other material on the crankshaft inspection area.
   - The portion to be tested must be held horizontally so as not let the test solution flow.
   - Test liquid should not be applied to the approximately 10 mm area around the oil port (2).

   2.2. Inspection method
   - Use an organic cleaner to thoroughly clean the crankshaft. There must be no traces of oil the surfaces to be inspected.
   - Prepare a 5 - 10 percent solution of ammonium cupric chloride (dissolved in distilled water).
   - Use a syringe to apply the solution (1) to the surface to be inspected. Hold the surface to be inspected perfectly horizontal to prevent the solution from running.

   2.3. Judgement
   - Wait for thirty to forty seconds. If there is no discoloration after thirty to forty seconds, the crankshaft is usable. If discoloration appears (the surface being tested will become the color copper), the crankshaft must be replaced.
   - Steam clean the crankshaft surface immediately after completing the inspection.

Note: The ammonium cupric chloride solution is highly corrosive. Because of this, it is imperative that the surfaces being inspected be cleaned immediately after completing the inspection.

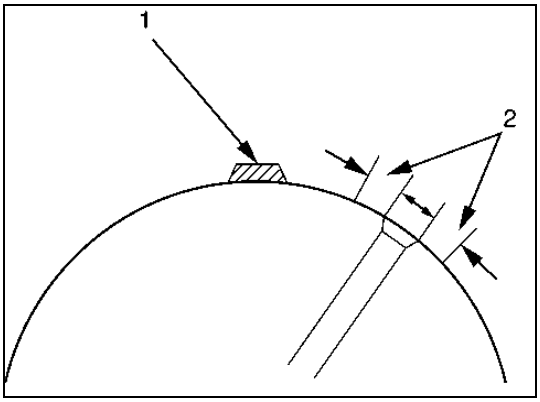

01 5MY00025.tif

REASSEMBLY

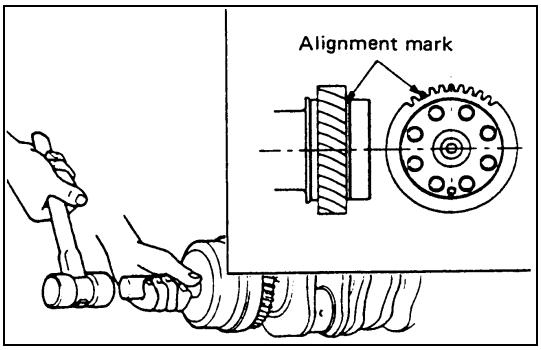

6A43-1.tif

45. Crankshaft

44. Crankshaft Gear

1) Use a piston heater to heat the crankshaft gear to 170° - 250°C (338° - 482°F).
2) With the alignment mark “S” on the side of the crankshaft gear turned outward, align the groove on the gear side with the crankshaft pin position and hammer it in with a crankshaft gear installer until it hits the bottom.

CAUTION:

When hammered in with the gear slanted, the crankshaft gear may be caught in the middle and cannot be hammered in fully. Hammer it inquickly enough not to allow a shaft line along the gear and the crankshaft to slant.

Crankshaft Gear Installer: 8-9439-6819-0

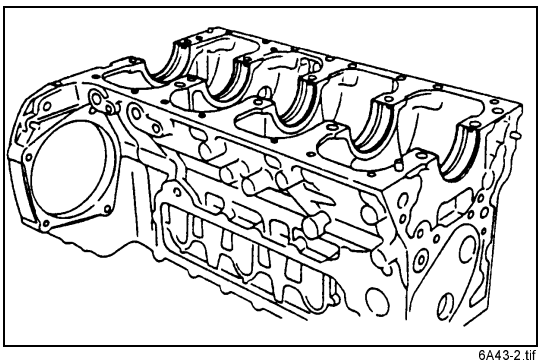
6A43-2.tif

43. Crankshaft Bearing Upper

When replacing the crankshaft or the crankshaft bearing with a new one, select the crankshaft bearing according to the respective grades stamped on the crankshaft and the cylinder body.

Above works refer to “CRANKSHAFT” section in this manual.

All upper bearings have oil grooves.

1) Carefully wipe any foreign material from the upper bearing.

CAUTION:

Do not apply engine oil to the bearing back faces and the cylinder body bearing fitting surfaces.

2) Locate the position mark applied at disassembly if the removed upper bearings are to be reused.

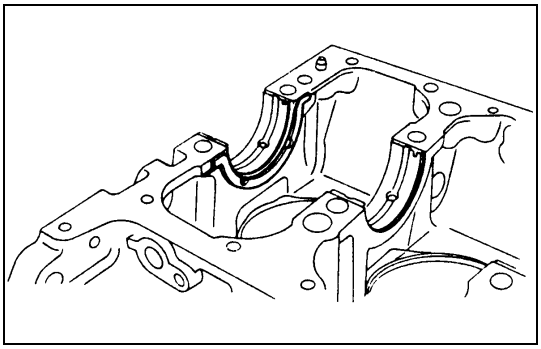
6A43-3.tif

42. Thrust Bearing Upper

1) Install the thrust bearing upper to the front side of the cylinder body No.5 journal. At this time, the thrust bearing upper may be pasted to the cylinder body with grease. However, wipe off any excessive grease clean.
2) The thrust bearing oil grooves must be facing the sliding faces.

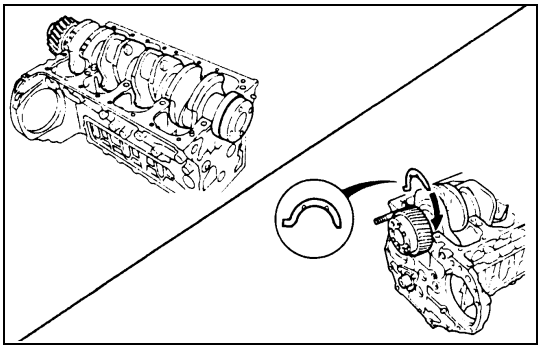

6A44-1.tif

41. Crankshaft Assembly

1) Apply an ample coat of engine oil to the crankshaft journals and the crankshaft bearing surfaces before installing the crankshaft with timing gear.
2) With the installed crankshaft pressed on to the rear side, install the thrust bearing upper to the rear side of the cylinder body No.5 journal.
3) The thrust bearing oil grooves must be facing the sliding faces.

40. Crankshaft Bearing Lower

All lower bearings does not have oil grooves.

1) Carefully wipe any foreign material from the lower bearing.

CAUTION:

Do not apply engine oil to the bearing back faces and the crankcase bearing fitting surfaces.

2) Locate the position mark applied at disassembly if the removed lower bearings are to be reused.

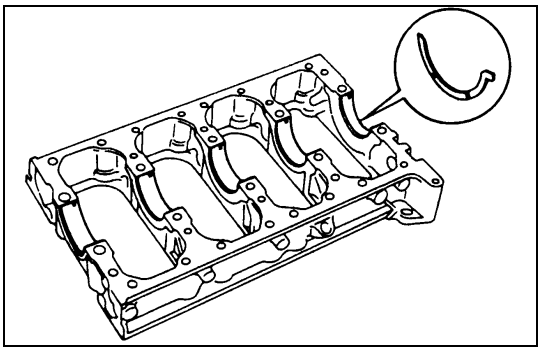

6A44-2.tif

39. Thrust Bearing Lower

1) Install the thrust bearing lower to the rear side of the crankcase No.5 journal.
2) The thrust bearing oil grooves must be facing the sliding faces.

38. Crankcase

1) Apply a 3 mm (0.1 inch) bead of recommended liquid gasket (Three Bond 1207C) or its equivalent to the crankcase upper surface as shown in the illustration.
2) Carefully place the crankcase on the cylinder body.

- Install the crankcase within 20 minutes after application of liquid gasket.

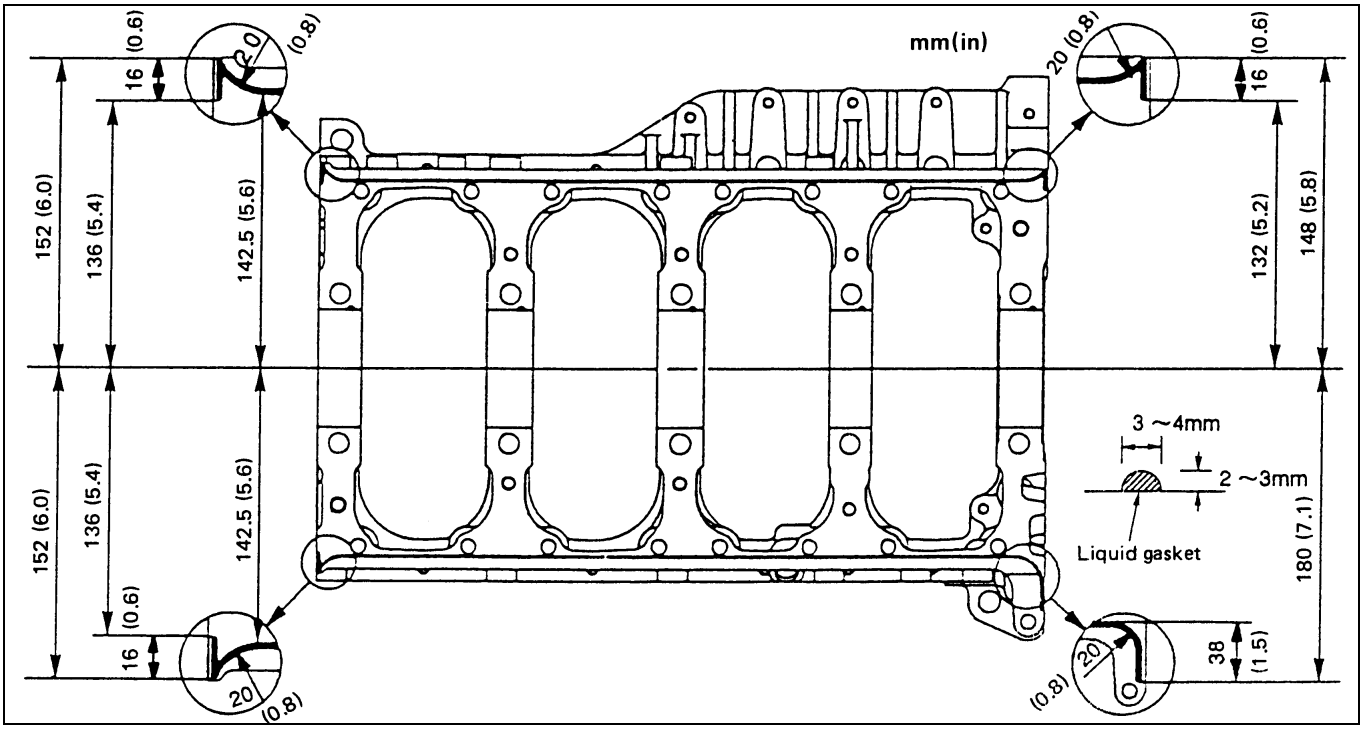

6A45-1.tif

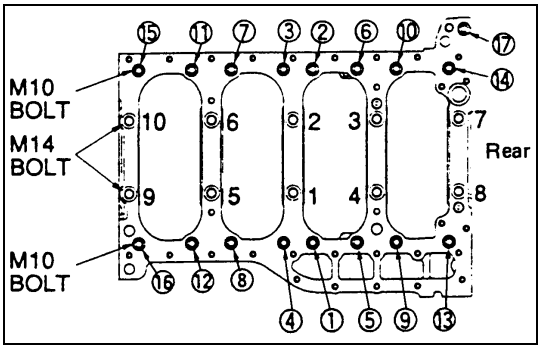

6A45-2.tif

3) Tighten the crankcase to the specified torque in the numerical order shown in the illustration.

Crankcase Bolt Torque (M14: 1~10)		N•m (kg•m/lb•ft)
1st step	2nd step	3rd step
98 (10/72)	132 (13.5/98)	30° - 60°

Crankcase Bolt Torque (M10: ① ~ ⑰)	N•m (kg•m/lb•ft)
37 (3.8/27)	

Angle gauge: 5-8840-0266-0

37. Piston and Connecting Rod Assembly

36. Connecting Rod Bearing

35. Connecting Rod Cap

Above works refer to “PISTON AND CONNECTING ROD” section in this manual.

34. Oil Pump Assembly

33. Idle Gear A

32. Flywheel Housing

31. Power Steering Pump Idle Gear

30. Power Steering Pump Idle Gear Cover

Above works refer to “OIL PUMP” section in this manual.

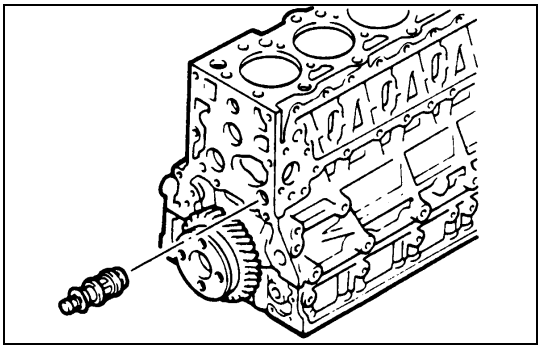

6A46-1.tif

29. Oil Thermo Valve (4HF1, 4HF1-2, 4HG1, 4HG1-T)

Insert the oil thermo valve into the cylinder body.

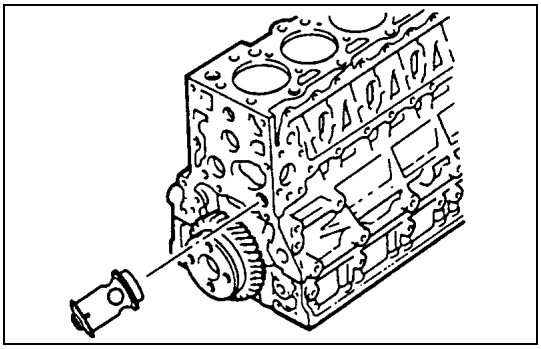

6A46-1-1.tif

29-1. Bypass Valve (4HE1-T, 4HE1-TC)

Insert the bypass valve into the cylinder body.

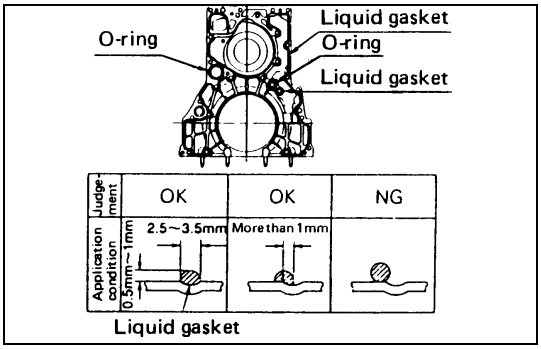

6A46-2.tif

28. Front Retainer

1) Carefully wipe any foreign material from the cylinder body front face.
2) Apply 2.5mm-3.5mm bead of the recommended liquid gasket (Three Bond 1207C) or its equivalent on the groove of the front retainer fitting surface shown in the illustration.
3) Install the O-rings (2 pieces) to the front retainer.
   - Install the front retainer within 7 minutes after application of liquid gasket.
   - For the dislocation of liquid gasket, refer to the illustration.

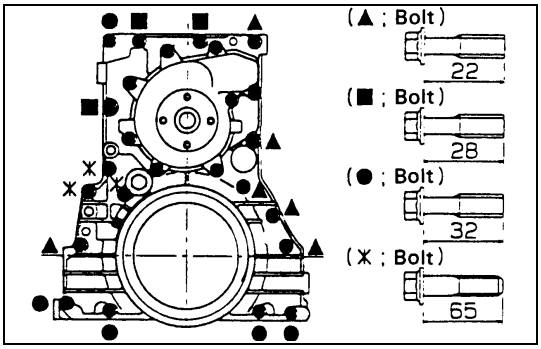

6A46-3.tif

4) Align the cylinder body knock pins with the front retainer knock pin holes.

Front Retainer Bolt Torque	N•m (kg•m/lb•ft)
24 (2.4/17)	

27. Water Pump Assembly

26. Water Pump Pulley

25. Oil Pump Strainer

24. Oil Pan

23. Spacer Rubber (NKR model only)

Above works refer to “CYLINDER BLOCK” section in this manual.

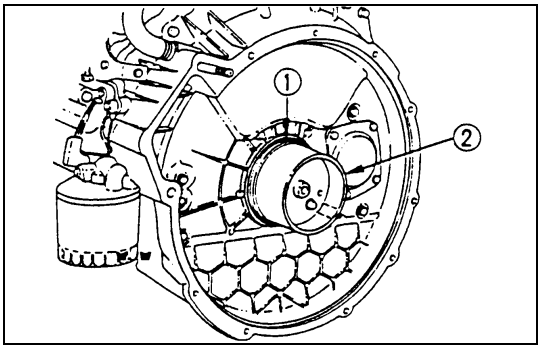

6A47-1.tif

22. Crankshaft Rear Slinger

Press in the slinger using oil seal setting tool kit.

1) Insert the slinger ① into the end of adapter ② and install the adapter on the crankshaft.

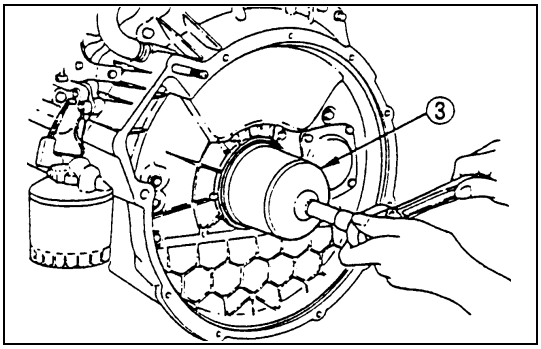

6A47-2.tif

2) Cover the sleeve ③ and tighten the bolt until the sleeve comes to contact the adapter stopper ④.

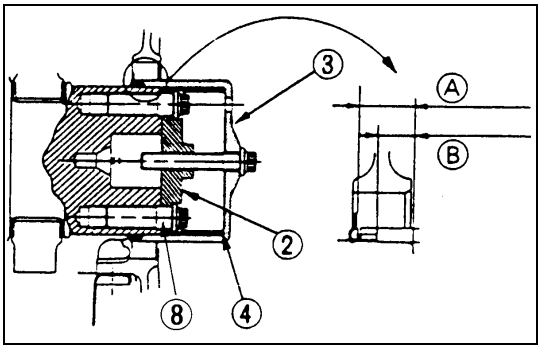

6A47-3.tif

3) Make sure of measurements specified in the illustration as well as of slinger deflection.
   - Ⓐ : 17.3 ± 0.3 mm (0.681 ± 0.012 in)
   - Ⓑ : 10.8 ± 0.1 mm (0.425 ± 0.004 in)

NOTE:

Be sure to replace the slinger and oil seal as a set.

Oil Seal Setting Tool Kit: 5-8840-2431-0

Rear slinger and oil seal setting tools

Part Name	Stamp	Slinger	Oil Seal
Adapter	RR	O	O
Sleeve	RR	O	O
Oil seal adapter ring	RR		O
Center bolt	-	O	O
Adapter bolt	-	O	O
Adapter bolt collar	RR	O	O

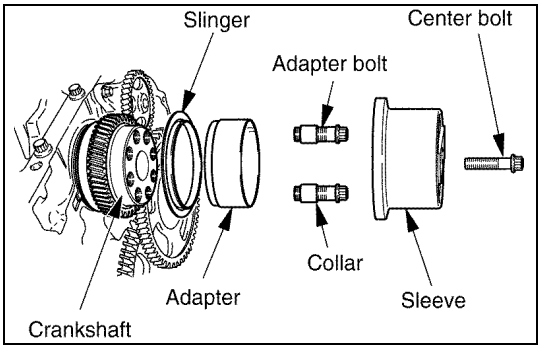

015LX159.tif

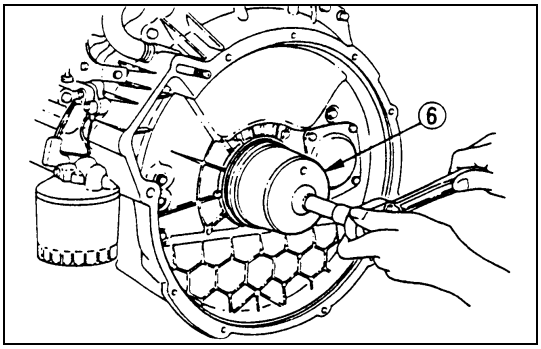

6A48-1.tif

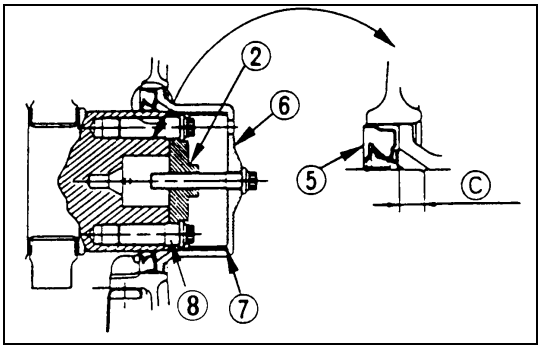

6A48-2.tif

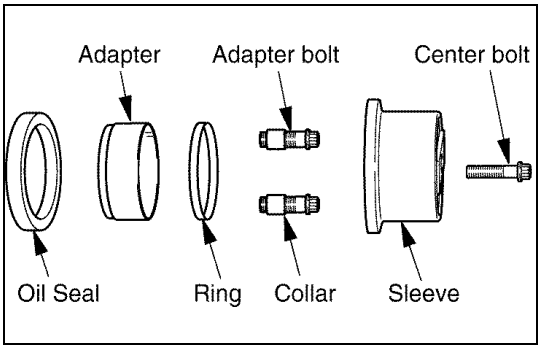

01 5LX1 58.tif

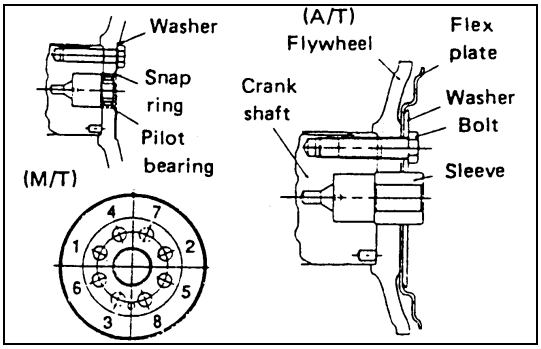

6A48-3.tif

21. Crankshaft Rear Oil Seal

1) Apply engine oil to the lip of the oil seal.
2) Press in the oil seal using rear oil seal setting tool kit.
3) Remove the slinger sleeve and insert the oil seal ⑤ into the adapter ②.
4) Install the adapter ring into the sleeve.
5) Install the oil seal sleeve ⑥ to the adapter ② and tighten the center bolt until the sleeve comes to contact the adapter stopper ⑦.
6) With the oil seal pressed in, make sure of the measurements specified in the illustration.
   Ⓒ : 7.8 ± 0.3 mm (0.307 ± 0.012 in)

20. Flywheel Assembly

1) Apply molybdenum disulfide grease to the flywheel bolt threads and setting faces.
   For A/T refer to section 6A3 "Flywheel and pilot bearing".
2) Align the flywheel with the crankshaft knock pin and temporarily tighten the flywheel bolts.
3) Use the crankshaft stopper to prevent the crankshaft from turning.
   Crankshaft Stopper: 5-8840-2230-0
4) Install the washer and the flywheel bolts and tighten to the specified torque in numerical order show in the illustration.

Flywheel Bolt Torque — N•m (kg•m/lb•ft)

1st step	2nd step
78 (8.0/58)	90° - 120°

5) Remove the crankshaft stopper.

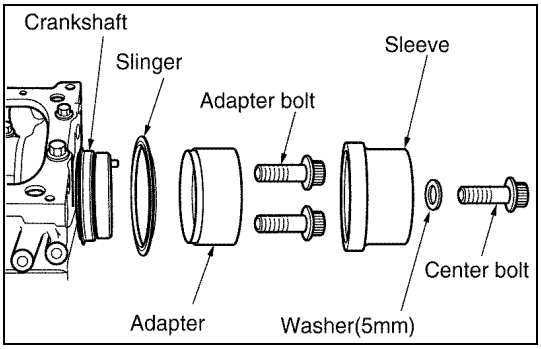

015LX160.tif

19. Crankshaft Front Slinger

Press in the slinger using oil seal setting tool kit.

Oil Seal Setting Tool Kit: 5-8840-2431-0

Front slinger and oil seal setting tools

Part Name	Stamp	Slinger	Oil Seal
Adapter	FT	O	O
Sleeve	FT	O	O
Oil seal adapter ring	FT		O
Center bolt	-	O	O
Adapter bolt	-	O	O

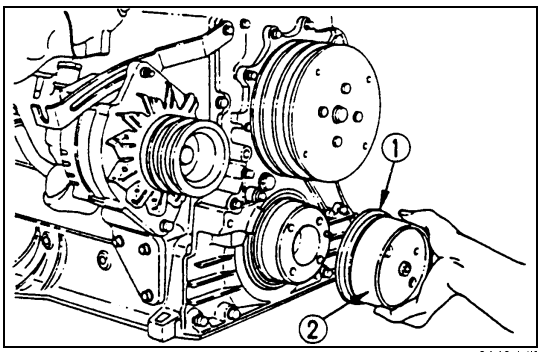

6A49-1.tif

1) Insert the slinger ① into the end of adapter ② and install the adapter on the crankshaft.

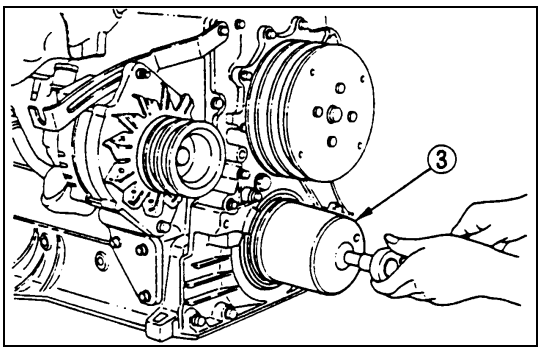

6A49-2.tif

2) Cover the sleeve ③ and tighten the bolt until the sleeve comes to contact the adapter stopper ④.

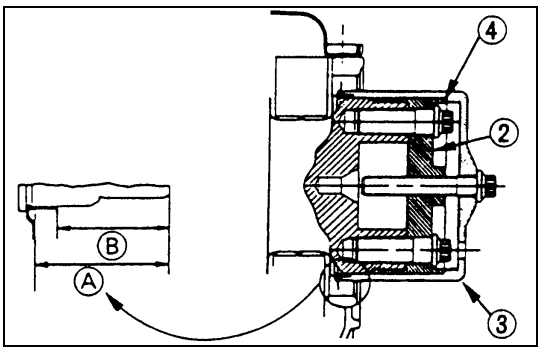

6A49-3.tif

3) Make sure of measurements specified in the illustration as well as of slinger deflection.
   - Ⓐ : 40.5 ± 0.3 mm (1.594 ± 0.012 in)
   - Ⓑ : 34.0 ± 0.1 mm (1.339 ± 0.004 in)

NOTE:
Be sure to replace the slinger and oil seal as a set.
Use about 5mm thickness plain washer on the center bolt.

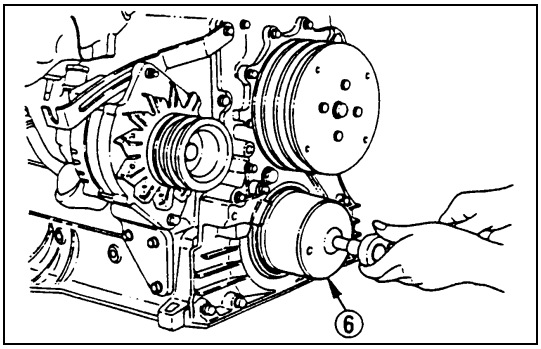

6A50-1.tif

18. Crankshaft Front Oil Seal

1) Apply engine oil to the lip of the oil seal.
2) Press in the oil seal using front oil seal setting tool kit.
3) Remove the slinger sleeve and insert the oil seal ⑤ into the adapter ②.
4) Install the adapter ring into the sleeve.
5) Install the oil seal sleeve ⑥ to the adapter ② and tighten the center bolt until the sleeve comes to contact the adapter stopper ⑦.

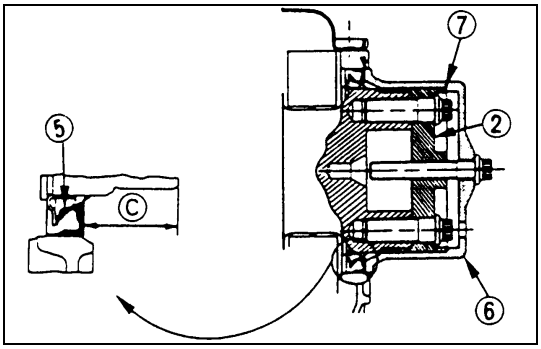

6A50-2.tif

6) Make sure of the measurements specified in the illustration.
   Ⓒ : 31 ± 0.3 mm (1.220 ± 0.012 in)

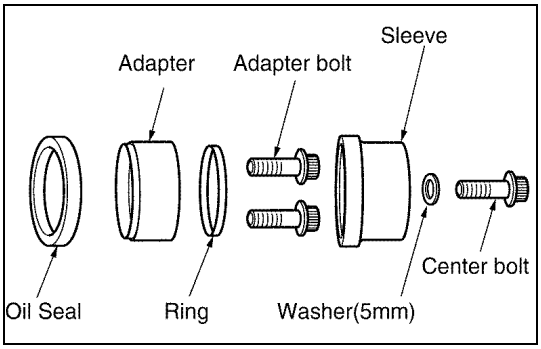

015LX157.tif

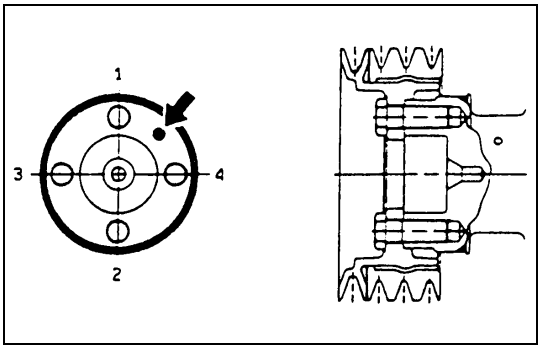

6A50-3.tif

17. Crankshaft Damper Pulley

1) Apply a coat of engine oil to the threads of the bolts.
2) Align the damper pulley with the crankshaft knock pin and tighten the bolts to the specified torque in numerical order.

Damper Pulley Bolt Torque	N•m (kg•m/lb•ft)
200 (20.4/147)	

16. Generator Bracket
15. Fan Belt Adjust Plate
14. Injection Pump Assembly
13. Engine Foot
12. Generator
11. Fan Belt

Fan Belt Adjustment

10. **Vacuum Pump Rubber Hose**
9. **Vacuum Pump Oil Pipe**
8. **Oil Filter Assembly**
7. **Oil Pipe**
6. **Engine Control Lever Assembly**
5. **Engine Control Wire**
4. **Driven Plate**
3. **Clutch Pressure Plate Assembly**
2. **Cylinder Head Gasket**

   Above works refer to “CYLINDER BLOCK” section in this manual.
1. **Cylinder Head Assembly**

   Above works refer to “CYLINDER HEAD” section in this manual.

PISTON AND CONNECTING ROD

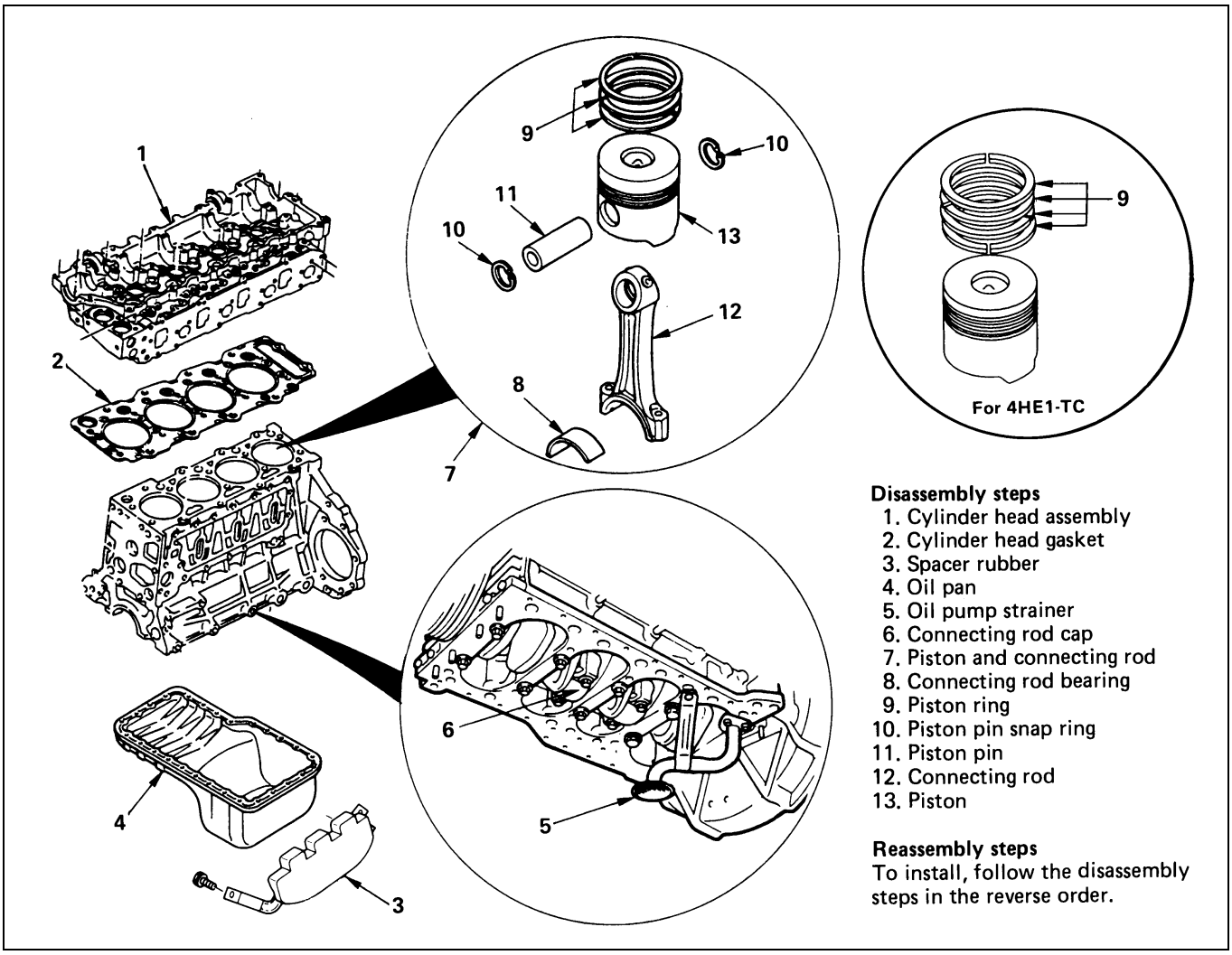

Disassembly steps
1. Cylinder head assembly
2. Cylinder head gasket
3. Spacer rubber
4. Oil pan
5. Oil pump strainer
6. Connecting rod cap
7. Piston and connecting rod
8. Connecting rod bearing
9. Piston ring
10. Piston pin snap ring
11. Piston pin
12. Connecting rod
13. Piston

Reassembly steps
To install, follow the disassembly steps in the reverse order.

6A52-1.tif

DISASSEMBLY

1. **Cylinder Head Assembly**
   Above works refer to “CYLINDER HEAD” section in this manual.
2. **Cylinder Head Gasket**
   CAUTION:
   Do not reuse the cylinder head gasket.
3. **Spacer Rubber**
4. **Oil Pan**

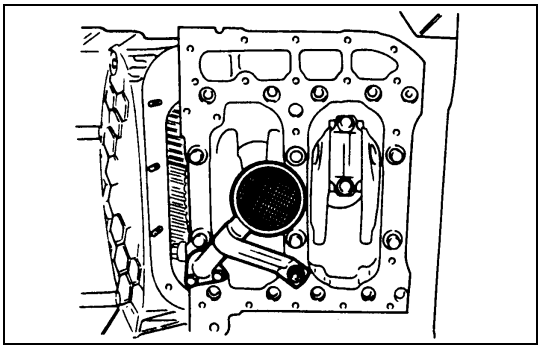

6A53-1.tif

5. Oil Pump Strainer

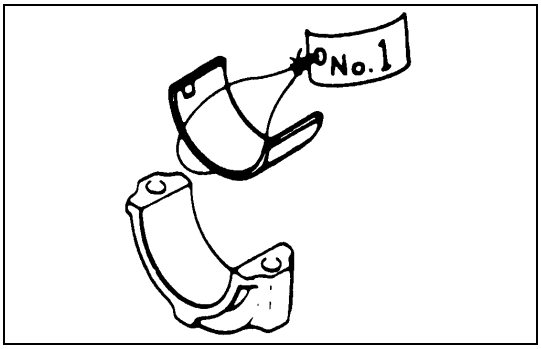

6A53-2.tif

6. Connecting Rod Cap

1) Take out the connecting rod bearing cap bolts and remove the bearing cap with the lower bearing.
2) If the connecting rod lower bearings are to be reinstalled, mark their fitting positions by tagging each bearing with the cylinder number from which it was removed.

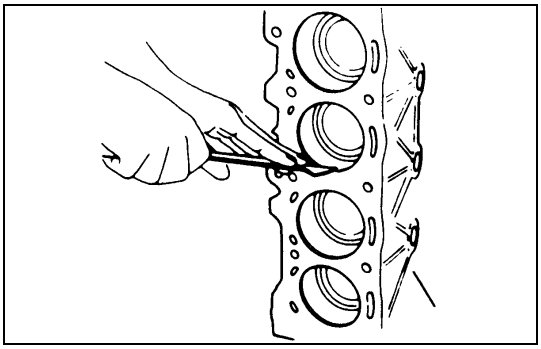

6A53-3.tif

7. Piston and Connecting Rod Assembly

1) To facilitate smooth removal of piston, remove carbon from the upper part of the cylinder wall using a scraper or equivalent.
2) Remove the piston and connecting rod assembly upward by pushing on the edge of the connecting rod with a hammer handle or equivalent.
3) If the connecting rod bearing are to be reinstalled, mark their fitting positions by taggfing each bearing with the cylinder number from which it was removed.

CAUTION:

Do not bend or damage the oiling jet.

NOTE:

When removing the piston and connecting rod assembly, pull the connecting rod in parallel with the cylinder bore.

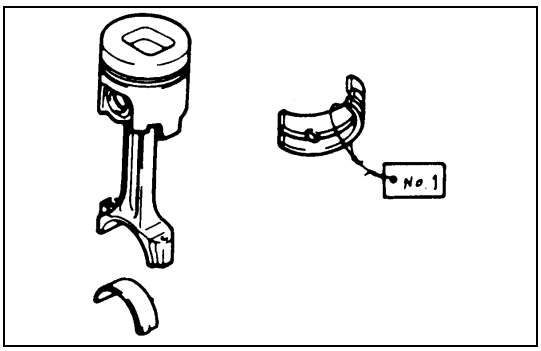

6A53-4.tif

8. Connecting Rod Bearing

If the connecting rod bearings are to be reinstalled, mark their fitting positions by tagging each bearing with the cylinder number from which it was removed.

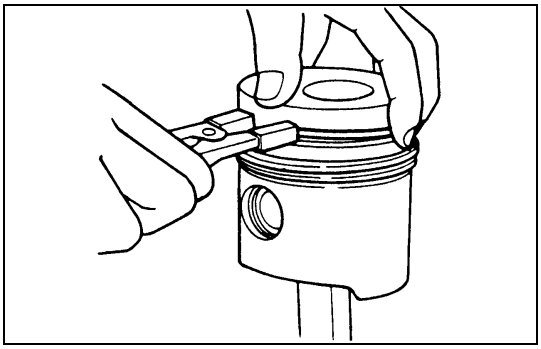
6A54-1.tif

9. Piston Ring

1) Clamp the connecting rod in a vise.
   Take care not to damage the connecting rod.
2) Use piston ring replacer to remove the piston rings.
   Do not attempt to use some other tool to remove the piston rings. Piston ring stretching will result in reduced piston ring tension.

10. Piston Pin Snap Ring

Use a pair of snap ring pliers to remove the piston pin snap rings.

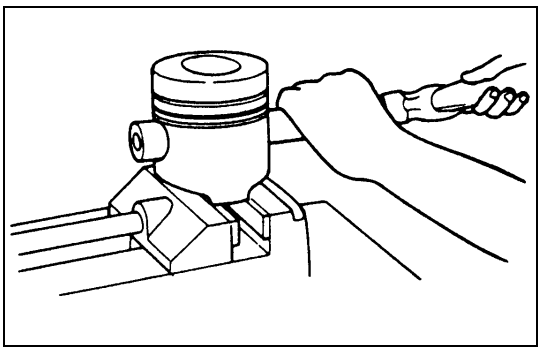
6A54-2.tif

11. Piston Pin
12. Connecting Rod
13. Piston

Tap the piston pin out with a hammer and a brass bar.
If the pistons are to be reinstalled, mark their installation positions by tagging each piston with the cylinder number from which it was removed.

INSPECTION AND REPAIR

Make the necessary adjustments, repairs, and part replacements if excessive wear or damage is discovered during inspection.

Piston Grade Selection and Cylinder Bore Measurement

Refer to the Section “CYLINDER BLOCK”, Item “Cylinder Liner Bore Measurement” for details on piston grade selection and cylinder liner bore measurement.

Piston Ring

Piston Ring Gap

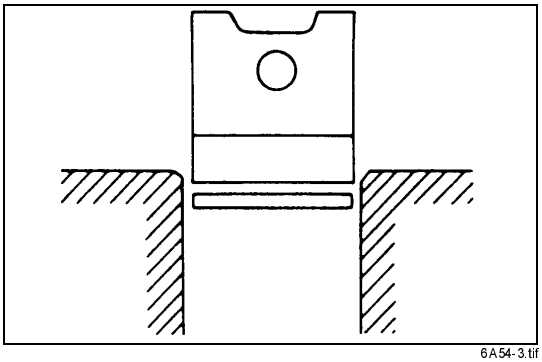
6A54-3.tif

1) Insert the piston ring horizontally (in the position it would assume if it were installed to the piston) into the cylinder liner bore.

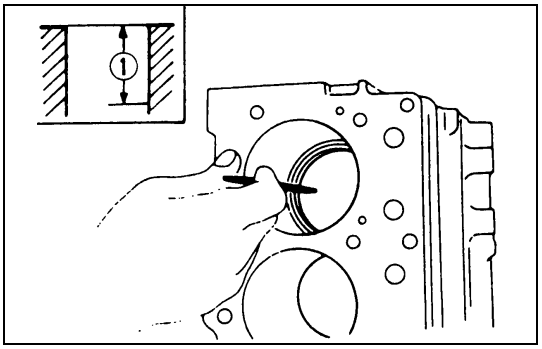

6A55-1.tif

2) Push the piston ring into the cylinder liner bore until it reaches the point ① where the cylinder liner bore is the smallest.
   Do not allow the piston ring to slant to one side or the other. It must be perfectly horizontal.

Measuring Point	mm (in)
Approx. 150 (6)	

3) Use a feeler gauge to measure the piston ring gap.
   If the measured valve exceeds the specified limit, the piston ring must be replaced.

Piston Ring Gap / 4HF1 / 4HF1-2 mm (in)

	Standard	Limit
1st compression ring gap	0.24 - 0.39 (0.0094 - 0.0153)	1.50 (0.0591)
2nd compression ring gap	0.35 - 0.50 (0.0138 - 0.0197)	
Oil ring gap	0.02 - 0.40 (0.0008 - 0.0157)	

Piston Ring Gap / 4HG1 / 4HG1-T mm (in)

	Standard	Limit
1st compression ring gap	0.24 - 0.39 (0.0094 - 0.0153)	1.50 (0.0591)
2nd compression ring gap	0.35 - 0.50 (0.0138 - 0.0197)	
Oil ring gap	0.15 - 0.35 (0.00591 - 0.0138)	

Piston Ring Gap / 4HE1-T mm (in)

	Standard	Limit
1st compression ring gap	0.24 - 0.40 (0.0094 - 0.0157)	1.50 (0.0591)
2nd compression ring gap	0.56 - 0.71 (0.0220 - 0.0279)	
Oil ring gap	0.20 - 0.40 (0.0078 - 0.0157)	

Piston Ring Gap / 4HE1-TC mm (in)

	Standard	Limit
1st compression ring gap	0.24 - 0.40 (0.0094 - 0.0157)	1.50 (0.0591)
2nd compression ring gap	0.30 - 0.450 (0.0118 - 0.0177)	
Oil ring gap	0.20 - 0.40 (0.0078 - 0.0157)	

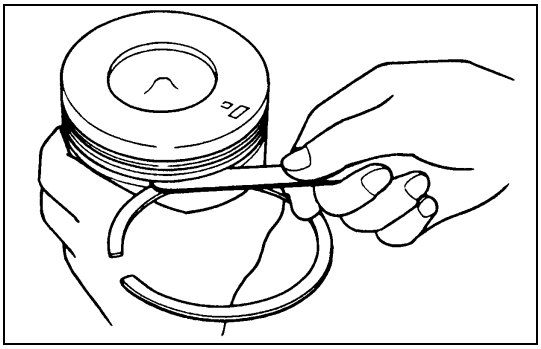
6A56-1.tif

Piston Ring and Piston Ring Groove Clearance

1) Use a feeler gauge to measure the clearance between the piston ring and the piston ring groove at several points around the piston.

Piston Ring and Piston Ring Groove Clearance / 4HF1, 4HF1-2: 4HG1, 4HG1-T mm (in)

	Standard	Limit
1st Compression Ring	0.062 - 0.092 (0.0024 - 0.0036)	0.20 (0.0079)
2nd Compression Ring	0.04 - 0.08 (0.0015 - 0.0031)	0.15 (0.0059)
Oil Ring	0.02 - 0.06 (0.0008 - 0.0024)	

Groove Clearance / 4HE1-T: 4HE1-TC mm (in)

	Standard	Limit
1st Compression Ring	0.09 - 0.13 (0.0035 - 0.0051)	0.20 (0.0078)
2nd and 3rd Compression Ring	0.09 - 0.13 (0.0035 - 0.0051)	
Oil Ring	0.03 - 0.07 (0.0012 - 0.0028)	0.15 (0.0059)

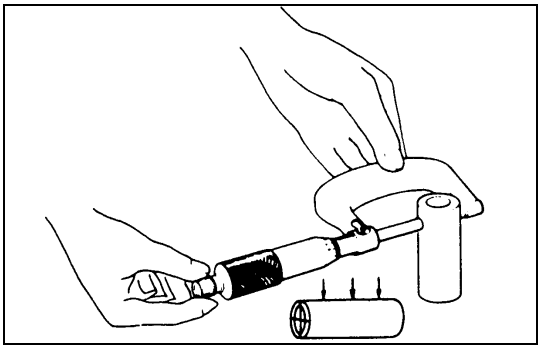
6A56-2.tif

2) Visually inspect the piston ring grooves.
If a piston ring groove is damaged or distorted, the piston must be replaced.

Piston Pin

Piston Pin Diameter

Use a micrometer to measure the piston pin outside diameter at several points.

If the measured value is less than the specified limit, the piston pin must be replaced.

Piston Pin Diameter mm (in)

Engine model	Standard	Limit
Except 4HE1-T 4HE1-TC	35.995 - 36.000 (1.4171 - 1.4173)	35.970 (1.4161)
4HE1-T 4HE1-TC	39.995 - 40.000 (1.5746 - 1.5748)	39.970 (1.5736)

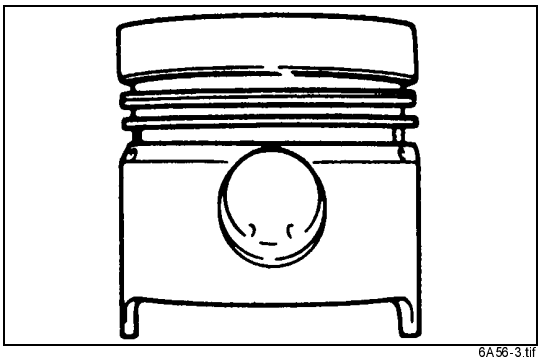
6A56-3.tif

Piston Pin Hole and Piston Pin Clearance

Use an inside dial indicator to measure the piston pin hole (in the piston).

Piston Pin Hole and Piston Pin Clearance mm (in)

Standard	Limit
0.004 - 0.017 (0.00016 - 0.00067)	0.04 (0.0016)

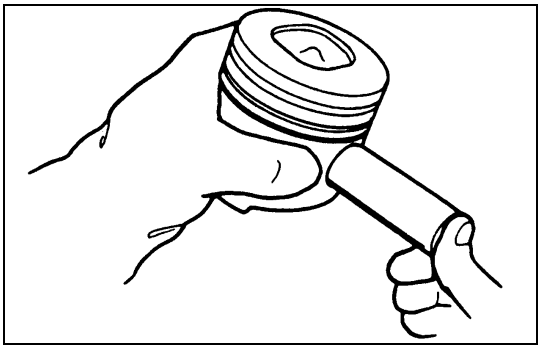

6A57-1.tif

If an inside dial indicator is not available, use the following procedure to check the piston pin clearance.

1) Use a piston heater to heat the piston to approximately 80-100°C (176-212°F)
2) Push strongly against the piston pin with your thumbs.
   The piston pin should move smoothly with little or no resistance.

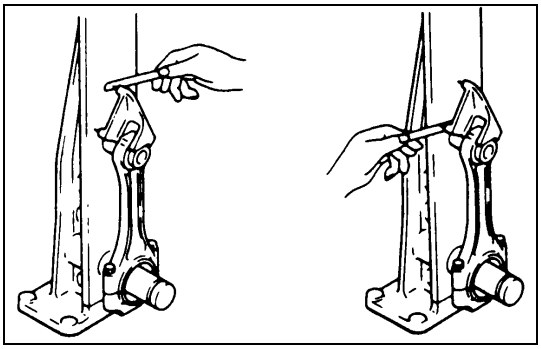

6A57-2.tif

Connecting Rod

Connecting Rod Alignment

Use a connecting rod aligner to measure the distortion and the parallelism between the connecting rod big end hole and the connecting rod small end hole.

If either the measured distortion or parallelism exceeds the specified limit, the connecting rod must be replaced.

Connecting Rod Alignment mm (in)

Per Length of 100 (3.94)		
	Standard	Limit
Distortion	0.05 (0.002) or less	0.20 (0.008)
Parallelism		

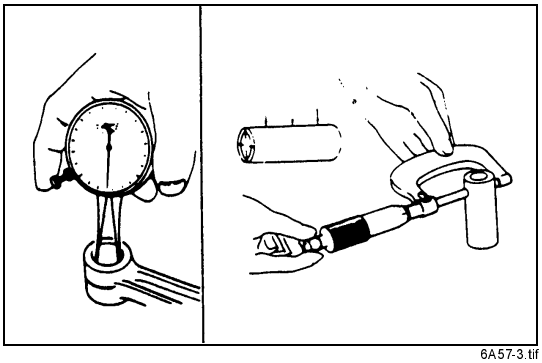

6A57-3.tif

Piston Pin and Connecting rod Small End Bushing Clearance

Use a caliper calibrator and a dial indicator to measure the clearance between the piston pin and connecting rod small end bushing.

If the clearance between the piston pin and the connecting rod small end bushing exceeds the specified limit, replace the piston pin and/or the connecting rod bushing.

Piston Pin and Connecting Rod
Small End Bushing Clearance mm (in)

Standard	Limit
0.012 - 0.027 (0.0005 - 0.0011)	0.05 (0.002)

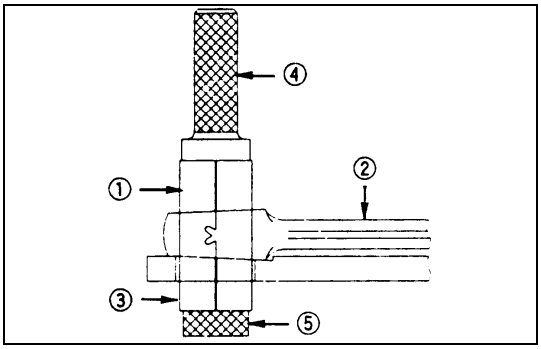

6A57-4.tif

Connecting Rod Bushing Replacement

Connecting Rod Bushing Removal

1) Set the collar ①, the connecting rod ②, and the collar ③ to the setting bar ④.
   Connecting Rod Bushing Replacer: 5-8840-2340-0
2) Hand-tighten the nut ⑤ until there is no more gap.

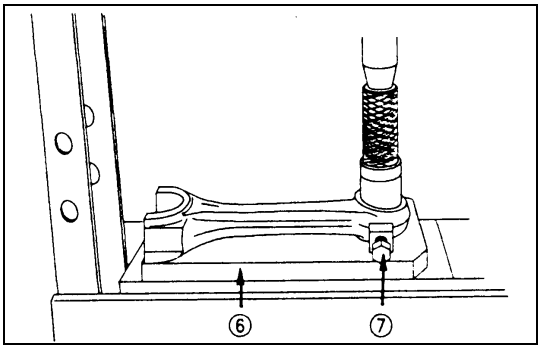

6A58-1.tif

3) Set the connecting rod bushing replacer base ⑥ to the bench press.
4) Set the connecting rod to the connecting rod bushing replacer base.
5) Tighten the bolt ⑦.
6) Use the bench press to force the bushing from the connecting rod.

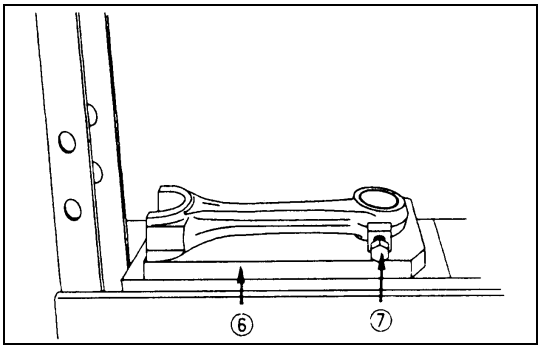

6A58-2.tif

Connecting Rod Bushing Installation

1) Set connecting rod bushing replacer base ① to the bench press.
   Connecting Rod Bushing Replacer: 5-8840-2340-0
2) Set the connecting rod to the connecting rod replacer base.
   The connecting rod must be perfectly horizontal.
3) Tighten the bolt ② to hold the connecting rod small end in place.
4) Install the two collars ③ and the new bushing ④ to the setting bar ⑤.
   Align the bushing clinch line and the collar setting marks.
   Tighten the nut ⑥.
5) Use the bench press to press the new bushing into position inside the connecting rod.
   Check that the bushing oil holes and the connecting rod oil holes are aligned.

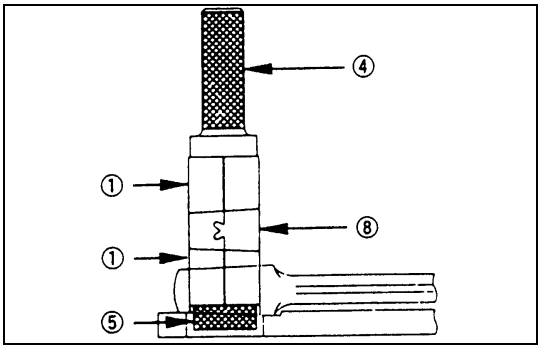

6A58-3.tif

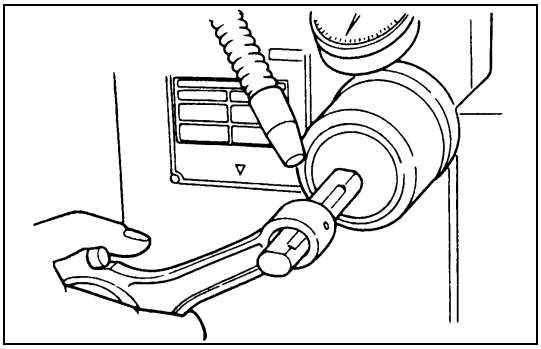
6A58-4.tif

6) Use a pinhole grinder to finish the new bushing.

Connecting Rod Small End Bushing
Inside Diameter mm (in)

Others	36.012 - 36.022 (1.4178 - 1.4182)
4HE1-T 4HE1-TC	40.012 - 40.022 (1.5753 - 1.5767)

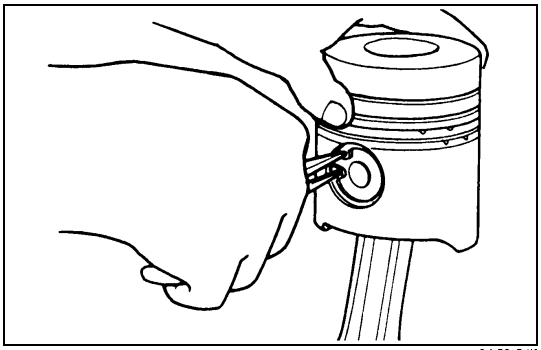
6A58-5.tif

REASSEMBLY

13. Piston

10. Piston Pin Snap Ring

Use a pair of snap ring pliers to install the piston pin snap ring to the piston.

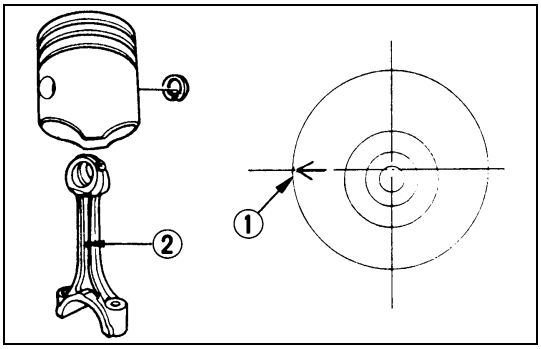

6A59-1.tif

12. Connecting Rod

1) Clamp the connecting rod in a vise.
   Take care not to damage the connecting rod.
2) Install the connecting rod so that the piston head front mark ① and the connecting rod forging mark (projecting) ② are set in the same direction.

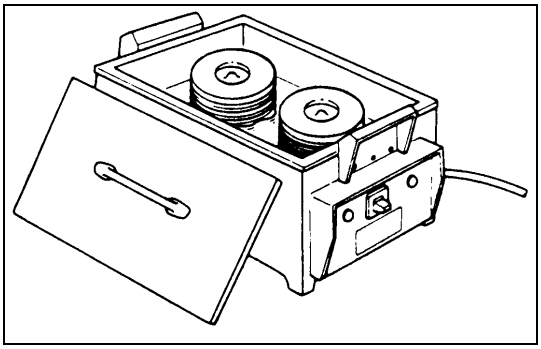
6A59-2.tif

11. Piston Pin

If could not be installed piston pin, it is recommended to remove it by following procedure.

1) Use a piston heater to heat the piston to 80-100°C (176-212°F).
2) Apply a coat of engine oil to the piston pin.
3) Use your fingers to force the piston pin into the piston until it makes contact with the snap ring.
4) Check to see if the connecting rod moves smoothly on the piston pin.

10. Snap Ring

9. Piston Ring

1) Use a piston ring replacer to install the three piston rings.
   Install the piston rings in the order shown in the illustration.
   ① 1st compression ring
   ② 2nd compression ring
   ③ 3rd compression ring (For 4HE1-TC)
   ④ Oil ring

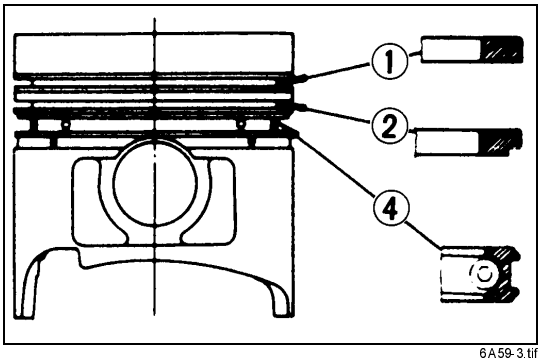

6A59-3.tif

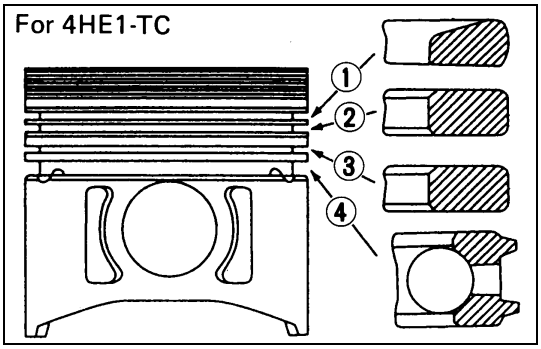

6A59-4.tif

NOTE:

Insert the expander coil into the oil ring groove so that there is no gap on either side of the expander coil before installing the oil ring.

Install the compression rings with the stamped side facing up.

2) Apply engine oil to the piston ring surfaces.
3) Check to see if the piston rings rotate smoothly in the piston ring grooves.

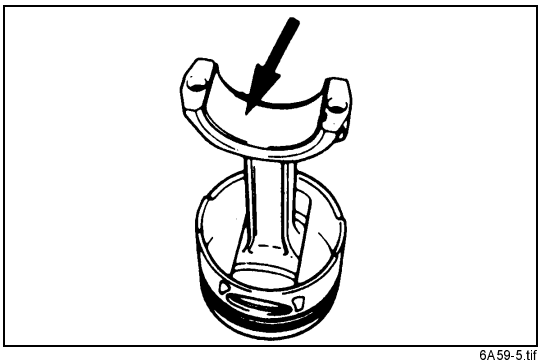
6A59-5.tif

8. Connecting Rod Bearing

Carefully wipe any oil or other foreign material from the connecting rod bearing back face and the connecting rod bearing fitting surface.

7. Piston and Connecting Rod Assembly

NOTE:

When installing new connecting rod and/or connecting rod bearings, refer to the selection table. Above works refer to "CRANKSHAFT" section in this manual.

1) Apply a coat of engine oil to the circumference of each piston ring and piston.

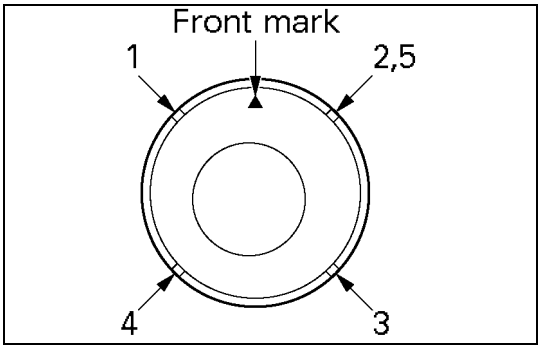

012HW002.tif

2) Position the piston ring gaps as shown in the illustration.
   ① 1st compression ring
   ② 2nd compression ring
   ③ 3rd compression ring (4HE1-TC only)
   ④ Oil ring
   ⑤ Coil expander
3) Apply a coat of molybdenum disulfide grease to the two piston skirts.
   This will facilitate smooth break-in when the engine is first started after reassembly.
4) Apply a coat of engine oil to the upper bearing surfaces.
5) Apply a coat of engine oil to the cylinder wall.
6) Position the piston head front mark so that it is facing the front of the engine.
7) Use the piston ring compressor to compress the piston rings.
   Piston Ring Compressor: 5-8840-9018-0
8) Use a hammer grip to push the piston in until the connecting rod makes contact with the crankpin.
   At the same time, rotate the crankshaft until the crankpin is at bottom dead center.

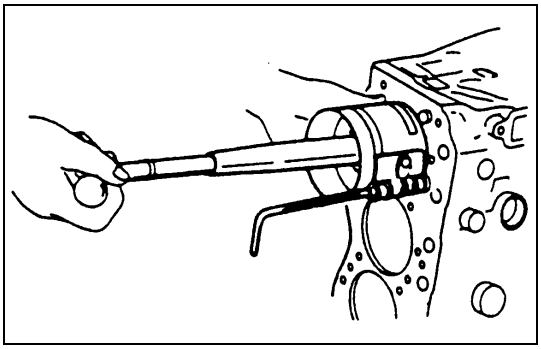
6A60-2.tif

CAUTION:
Do not bend or damage the oiling jet.

6. Connecting Rod Cap

1) Install the connecting rod bearing caps.
2) Align the bearing cap cylinder number marks and the connecting rod cylinder number marks.
3) Apply a coat of molybdenum disulfide grease to the threads and setting faces of each connecting rod cap bolts.

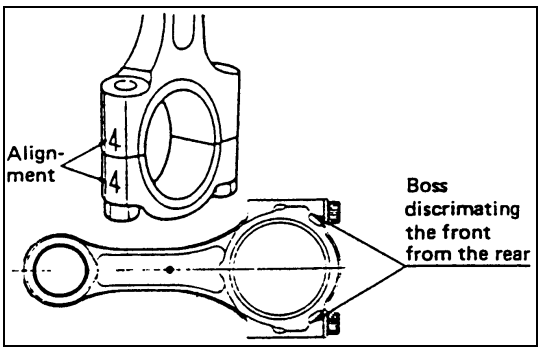

6A60-3.tif

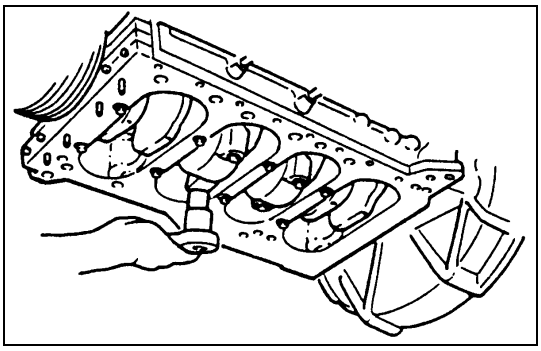
6A60-4.tif

4) Tighten the connecting rod caps to the specified torque.

Connecting Rod Bearing Cap
Bolt Torque N•m (kg•m/lb•ft)

1st step	2nd step	3rd step
39 (4.0/29)	60°	30°

Angle gauge: 5-8840-0266-0

5. **Oil Pump Strainer**
4. **Oil Pan**
3. **Spacer Rubber (NKR model only)**
2. **Cylinder Head Gasket**

   Above works refer to “CYLINDER BLOCK” section in this manual.
1. **Cylinder Head Assembly**

   Above works refer to “CYLINDER HEAD” section in this manual.

CYLINDER BLOCK

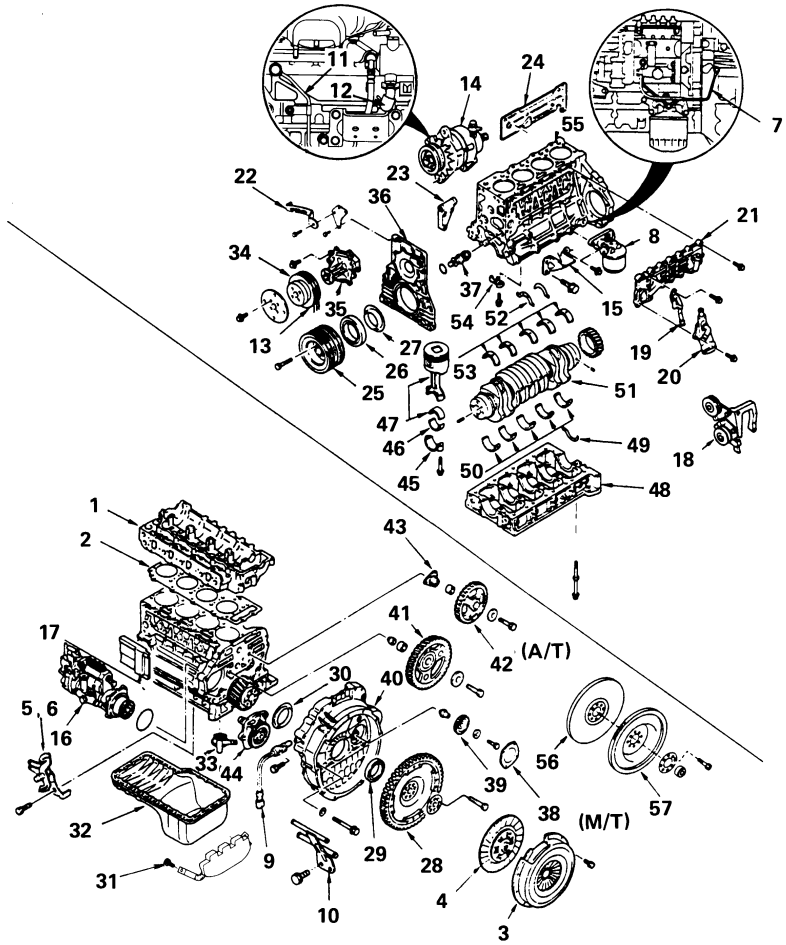

Disassembly steps

1. Cylinder head assembly
2. Cylinder head gasket
3. Clutch pressure plate assembly
4. Driven plate
5. Engine control wire
6. Engine control lever assembly
7. Oil pipe
8. Oil filter assembly
9. Tachometer sensor
10. Fuel pipe bracket
11. Vacuum pump oil
12. Vacuum pump rubber hose
13. Fan belt
14. Generator
15. Engine foot
16. Injection pump assembly
17. Injection pump rubber spacer
18. Idle pulley bracket
19. Heater pipe
20. Water suction pipe
21. Oil cooler assembly
22. Fan belt adjust plate
23. Generator bracket
24. Cover
25. Crankshaft pulley
26. Crankshaft front oil seal
27. Crankshaft front slinger
28. Flywheel assembly (M/T)
29. Crankshaft rear oil seal
30. Crankshaft rear slinger
31. Spacer rubber
32. Oil pan
33. Oil pump strainer
34. Water pump pulley
35. Water pump
36. Front retainer
37. Oil thermo valve
38. Power steering pump idle gear cover
39. Power steering pump idle gear
40. Flywheel housing
41. Idle gear A
42. Idle gear B
43. Idle gear B shaft
44. Oil pump assembly
45. Connecting rod cap
46. Connecting rod lower bearing
47. Piston and connecting
48. Crankcase
49. Thrust bearing lower
50. Crankshaft bearing lower
51. Crankshaft assembly
52. Thrust bearing upper
53. Crankshaft bearing upper
54. Piston oil jet
55. Cylinder block
56. Flywheel (A/T)
57. Flexible plate(A/T)

Reassembly steps

To reassemble, follow the disassembly steps in the reverse order.

6A62-1.tif

DISASSEMBLY

1. **Cylinder Head Assembly**
   Above works refer to “CYLINDER HEAD” section in this manual.
2. **Cylinder Head Gasket**
   CAUTION:
   Do not reuse the cylinder head gasket.

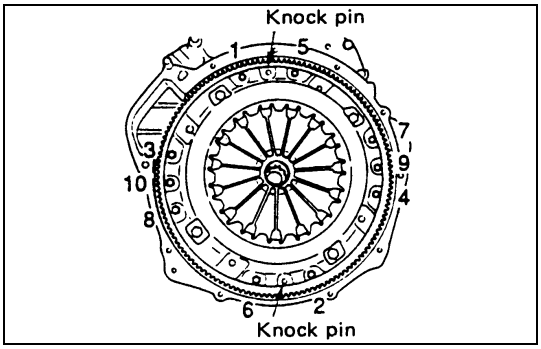

6A63-1.tif

3. **Clutch Pressure Plate Assembly**
   1) Insert the clutch pilot a sligner to the clutch assembly.
      Clutch Pilot Aligner: 5-8840-2240-0
   2) Loosen the pressure plate bolts in numerical order a little at a time as shown in the illustration.
   3) Remove the pressure plate assembly.

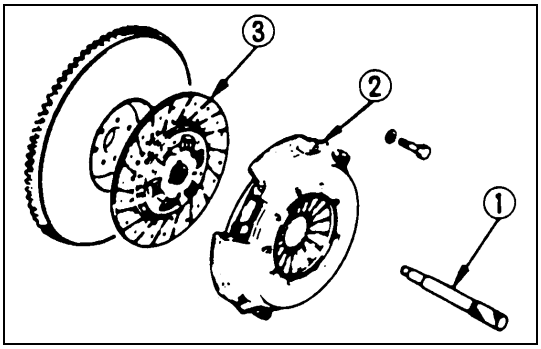

6A63-2.tif

4. **Driven Plate**
   Remove the driven plate with the clutch pilot aligner.
   ① Clutch pilot aligner
   ② Clutch pressure plate assembly
   ③ Driven plate

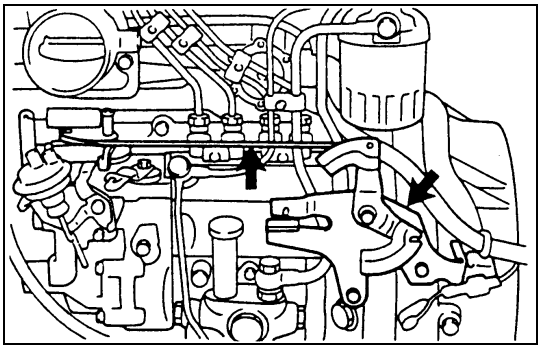
6A63-3.tif

5. **Engine Control Wire**
6. **Engine Control Lever Assembly**
7. **Oil Pipe**

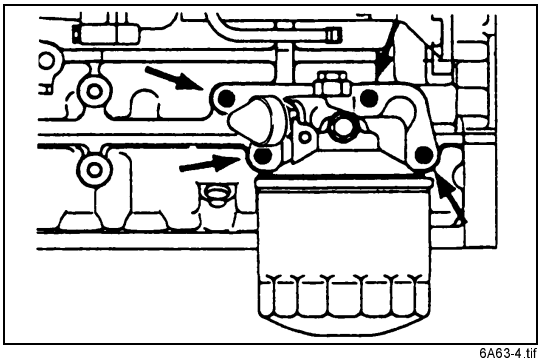
6A63-4.tif

8. **Oil Filter Assembly**
9. **Tachometer Sensor**
10. **Fuel Pipe Bracket**

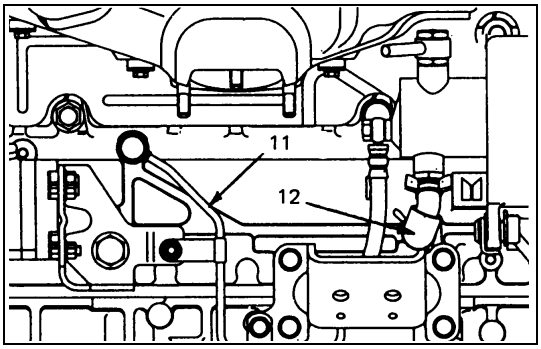

6A64-1.tif

11. Vacuum Pump Oil Pipe
12. Vacuum Pump Rubber Hose
13. Fan Belt
14. Generator

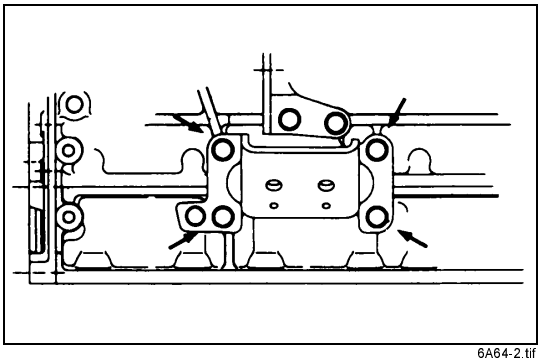
6A64-2.tif

15. Engine Foot

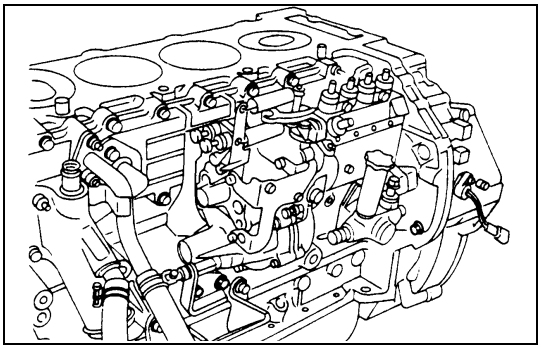
6A64-3.tif

16. Injection Pump Assembly
1) Remove the injection pump bracket bolts and the injection pump rear bracket bolts.
2) Then remove the injection pump assembly.

17. Injection Pump Rubber Spacer

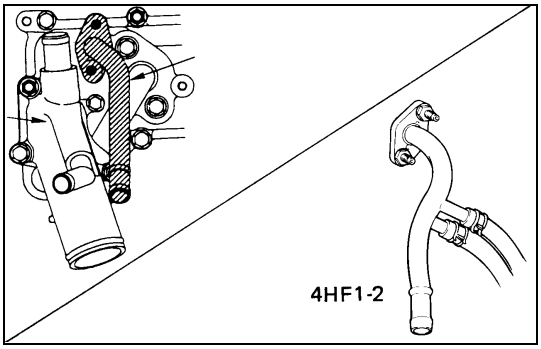

6A64-4.tif

18. Idle Pulley Bracket (If equipped with A/C)

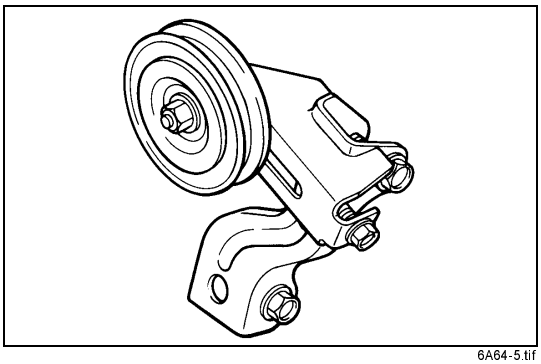
6A64-5.tif

19. Heater Pipe
20. Water Suction Pipe

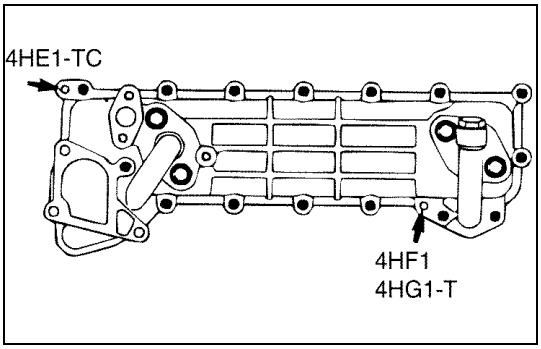

050LX031.tif

21. Oil Cooler Assembly

1) Remove the oil cooler bolts.
2) Install a oil cooler fixing bolt to the oil cooler replacer hole as shown in the illustration, and tighten the bolt alternately a little at a time.

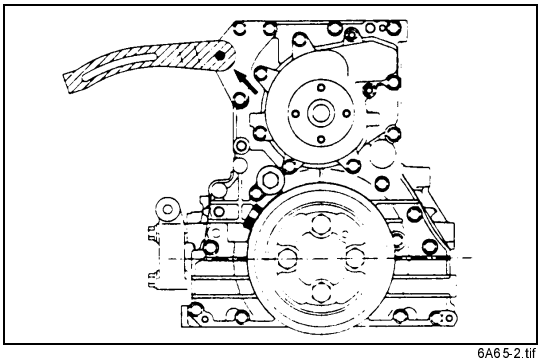

6A65-2.tif

22. Fan Belt Adjust Plate

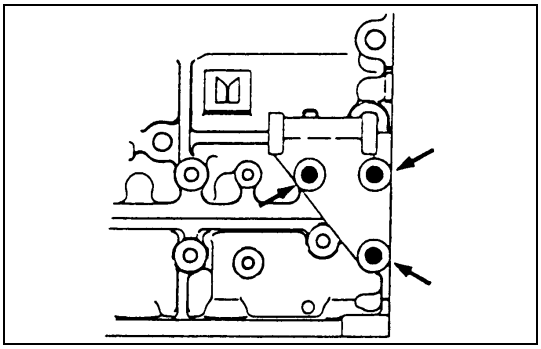

6A65-3.tif

23. Generator Bracket

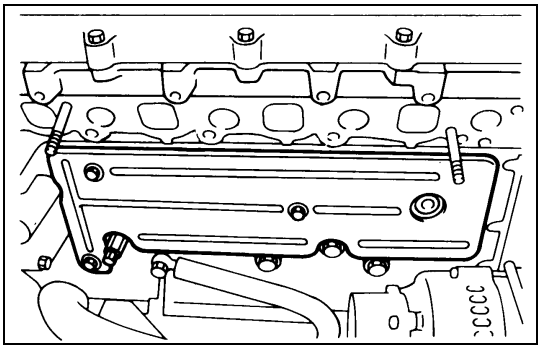

6A65-4.tif

24. Cover

25. Crankshaft Damper Pulley
26. Crankshaft Front Oil Seal
27. Crankshaft Front Slinger
28. Flywheel Assembly
29. Crankshaft Rear Oil Seal
30. Crankshaft Rear Slinger
31. Space Rubber (NKR model only)
32. Oil Pan
33. Oil Pump Strainer

34. Water Pump Pulley
35. Water Pump
36. Front Retainer
37. Oil Thermo Valve
38. Power Steering Pump Idle Gear Cover
39. Power Steering Pump Idle Gear
40. Flywheel Housing
41. Idle Gear A
42. Idle Gear B
43. Idle Gear B Shaft
44. Oil Pump Assembly
45. Connecting Rod Cap
46. Connecting Rod Lower Bearing
47. Piston and Connecting Rod Assembly
48. Crankcase
49. Thrust Bearing Lower
50. Crankshaft Bearing Lower
51. Crankshaft Assembly
52. Thrust Bearing Upper
53. Crankshaft Bearing Upper

Above works refer to “CRANKSHAFT” section in this manual.

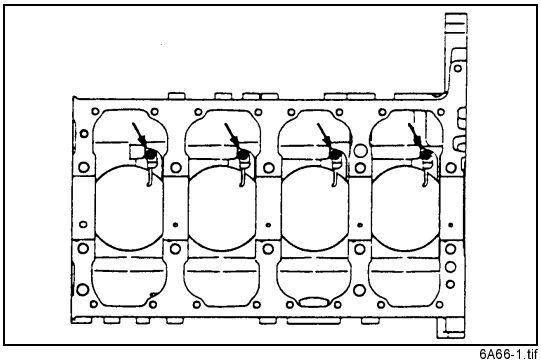
6A66-1.tif

54. Oiling Jet

Loosen the check valves to remove both the check valves and the oiling jets.

Take care not to bend or damage the oiling jets.

55. Cylinder Block

INSPECTION AND REPAIR

Make the necessary adjustments, repairs, and part replacements if excessive wear or damage is discovered during inspection.

1) Remove the gasket and any other material adhering to the upper surface of the cylinder block.

   Be very careful not to allow any material to accidentally drop into the cylinder block.

   Be very careful not to scrtatch the cylinder block.

2) Carefully remove the oil pump, Rear Oil Seal, and oil pan installation surface seal.

3) Wipe the cylinder block clean.

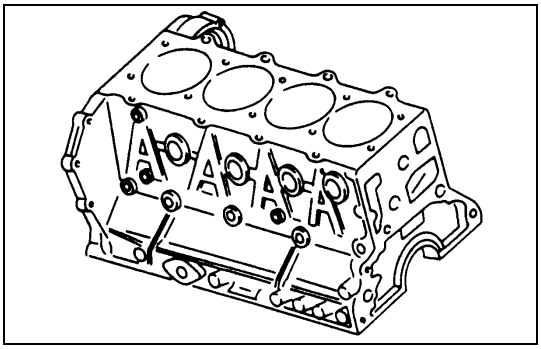

6A67-1.tif

Cylinder Body Upper Face Warpage

1) Remove the cylinder body dowel.
2) Remove the cylinder liner.
   Refer to “Cylinder Liner Replacement.”

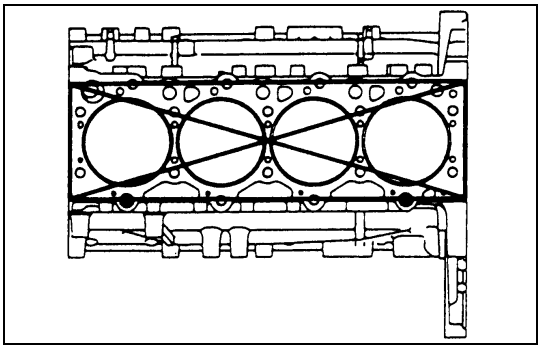

6A67-2.tif

3) Use a straight edge and a feeler gauge to measure the four sides and the two diagonals of the cylinder body upper face.
4) If the measured values exceed the specified limit, the cylinder body must be replaced.

CAUTION:

Do not regrind the cylinder body upper face.

Cylinder Body Upper Face Warpage mm (in)

Standard	Limit
0.05 (0.002) or less	0.20(0.008)

Cylinder Body Height (H) (Reference) mm (in)

Standard
279.965 - 280.035 (11.022 - 11.025)

5) Reinstall the cylinder liner.
   Refer to the “Cylinder Body Bore Measurement.”
6) Reinstall the cylinder body dowel.

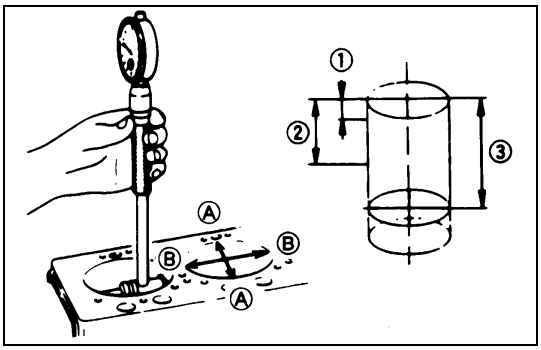

6A67-3.tif

Cylinder Liner Bore Measurement

Use a cylinder indicator to measure the cylinder bore at measuring points ①, ② and ③ in the Ⓐ - Ⓐ and Ⓑ - Ⓑ directions of the crankshaft.

Measuring points:

① 20 mm (0.79 in)

② 90 mm (3.54 in)

③ 160 mm (6.30 in)

If the measured value exceeds the specified limit, the cylinder liner must be replaced.

Cylinder Liner Bore mm (in)

	Standard	Limit
4HF1 4HF1-2	112.021 - 112.050 (4.4103 - 4.4114)	112.20 (4.417)
4HG1 4HG1-T	115.021 - 115.050 (4.5284 - 4.5295)	115.20 (4.535)
4HE1-T 4HE1-TC	110.041 - 110.080 (4.3323 - 4.3338)	110.23 (4.340)

NOTE:

The inside of the dry type cylinder liner is made of thin cast iron. It cannot be rebored or honed.

If the inside of the cylinder liner is scored or scorched, the cylinder liner must be replaced.

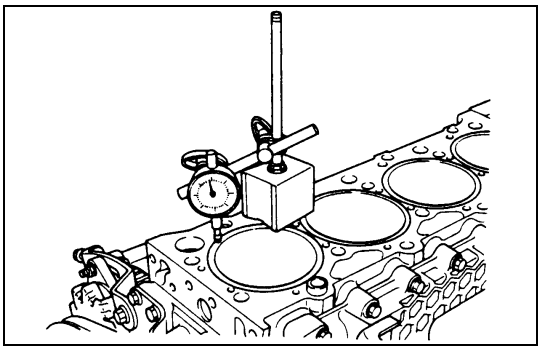

6A68-1.tif

Cylinder Liner Projection Inspection

Use a dial gauge to measure the projection of each cylinder.

Cylinder Liner Projection	mm (in)
Standard	
0.09 - 0.14 (0.0035 - 0.0055)	

The difference in the cylinder liner projection height between any two adjacent cylinders must not exceed 0.03 mm (0.0012 in).

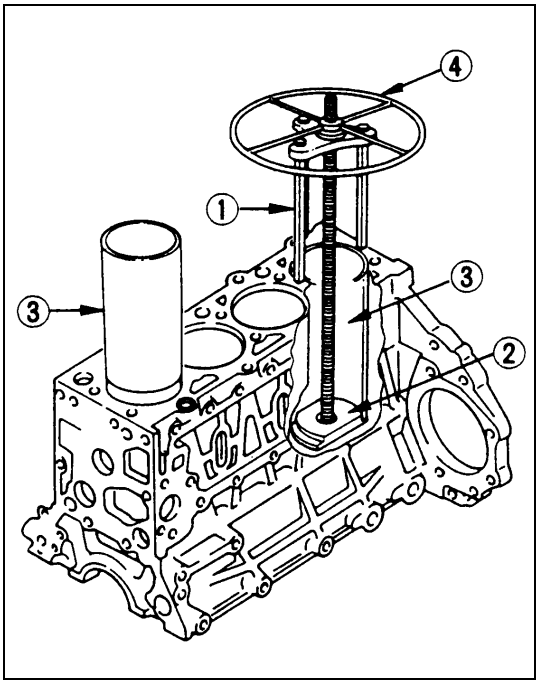

6A68-2.tif

Cylinder Liner Replacement

Cylinder Liner Removal

If could not be removed cylinder liner, it is recommended to remove it by following procedure.

1) Set the cylinder liner remover ① to the cylinder liner ③.
2) Check to see if the remover shaft ankle ② is firmly gripping the cylinder liner bottom edge.
3) Slowly turn the remover shaft handle ④ clockwise to pull the cylinder liner free.

Cylinder Liner Remover: 9-8523-1169-0

Cylinder Liner Remover Ankle: 5-8840-2220-0

Ankle: 5-8840-2397-0 (4HG1)

CAUTION:

Take care not to damage the cylinder body upper face during the cylinder liner removal procedure.

Cylinder Liner Grade Selection and Standard Fitting Interference

Accurately measured fitting interference and proper cylinder liner grade selection are extremely important.

If the cylinder liner fitting interference is too small, engine cooling efficiency will be adversely affected.

If the cylinder liner fitting interference is too large, it will be difficult to insert the cylinder liner into the cylinder body.

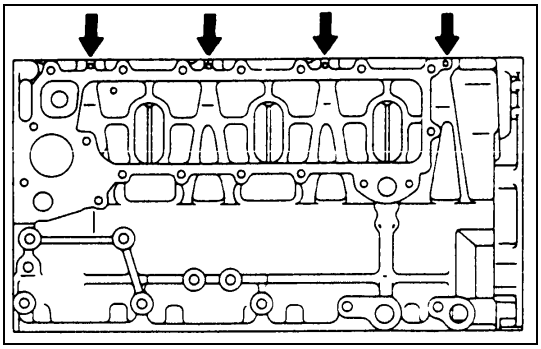
6A69-1.tif

A mark was stamped on the left side of the cylinder block during production to indicate the correct liner. The liner grade (i.e.1, 2, 3) is indicated in metal stamp.

Cylinder Liner Grade

4HF1 / 4HF1-2

Line Grade	Cylinder Bore Diameter mm (in.)	Service Grade	Liner Outside Diameter mm (in.)
1	115.001 - 115.010 (4.5276 - 4.5279)	1X	114.991 - 115.000 (4.5272 - 4.5276)
2	115.011 - 115.020 (4.5280 - 4.5283)	3X	115.001 - 115.010 (4.5276 - 4.5279)
3	115.021 - 115.030 (4.5284 - 4.5287)		

4HG1 / 4HG1-T

1	118.001 - 118.010 (4.6457 - 4.6461)	1X	117.991 - 118.000 (4.6453 - 4.6457)
2	118.011 - 118.020 (4.6461 - 4.6464)	3X	118.001 - 118.010 (4.6457 - 4.6461)
3	118.021 - 118.030 (4.6465 - 4.6468)		

4HE1-T / 4HE1-TC

1	115.001 - 115.010 (4.5276 - 4.5279)	1X	115.021 - 115.030 (4.5284 - 4.5287)
2	115.011 - 115.020 (4.5280 - 4.5283)	3X	115.031 - 115.040 (4.5289 - 4.5291)
3	115.021 - 115.030 (4.5284 - 4.5287)		

The cylinder liner grade is stamped on the outside of the cylinder liner.

Cylinder Liner Installation (For 4HF1, 4HF1-2, 4HG1 and 4HG1-T Engine)

1) Use new kerosene or diesel oil to thoroughly clean the cylinder liners and bores.
2) Use compressed air to blow dry the cylinder liner and bore surfaces.

CAUTION:
All foreign material must be carefully removed from the cylinder liner and the cylinder bore before installation.

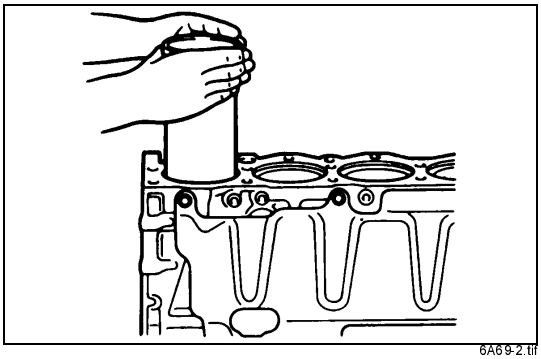
6A69-2.tif

3) Install cylinder liner perpendicularly to cylinder bore. Do not give any excessive force such as knocking while inserting cylinder liner into cylinder bore.

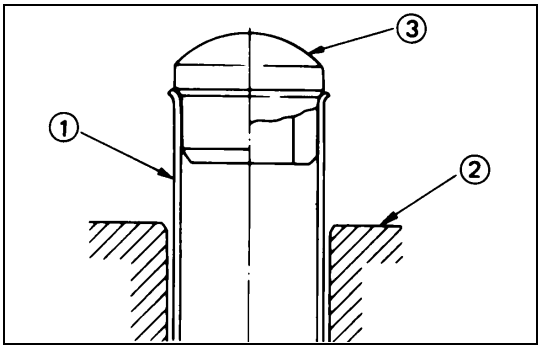

6A70-1.tif

Cylinder Liner Installation (For 4HE1-T and 4HE1-TC Engine)

1) Cylinder Liner Installation Using The Special Tool
   - Use new kerosene or diesel oil to thoroughly clean the cylinder liners and bores.
   - Use compressed air to blow-dry the cylinder liner and bore surfaces.

CAUTION:

All foreign material must be carefully removed from the cylinder liner and the cylinder bore before installation.

- Insert the cylinder liner ① into the cylinder body ② from the top of the cylinder body.

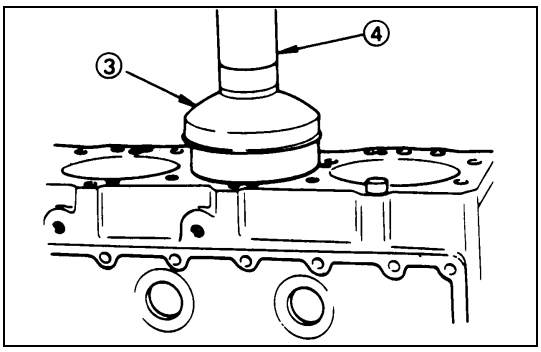

6A70-2.tif

- Set the cylinder liner installer ③ to the top of the cylinder liner.
  Cylinder Liner Installer: 5-8840-2337-0
- ③ is directly beneath the bench press shaft center ④.

CAUTION:

Check that the cylinder liner is set perpendicular to the bench press and that there is no wobble.

- Use the bench press to apply a seating force of 4,900 N (500 kg/1,102.5 lb) to the cylinder liner.
- Apply a force of 24,500 N (2,500 kg/5,512.5 lb) to fully seat the cylinder liner.
- After installing the cylinder liner, measure the cylinder liner projection.
  Refer to “Cylinder Liner Projection Inspection”.

2) Cylinder Liner Installation Using Dry Ice
   If the cylinder liner is a chrome plated dry type, it is advisable to use dry ice during the installation procedure.
   Cooling the cylinder liner with dry ice will cause the cylinder liner to contract, thus making installation easier.

CAUTION:

It is important that the cylinder liner be inserted to the cylinder body immediately after it has been cooled.

WARNING:

Dry ice must be used with great care. Careless handling of dry ice can result in severe frostbite.

PISTON GRADE SELECTION

Measure the cylinder liner bore after installing the cylinder liner. Then select the appropriate piston grade for the installed cylinder liner.

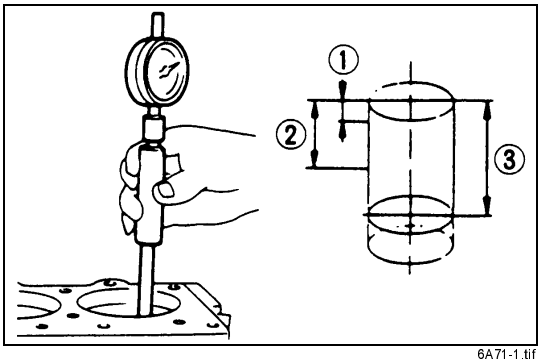

6A71-1.tif

1) Measure the cylinder liner bore.
   Refer to the “Cylinder Liner Bore Measurement”.
   Measuring Point ① 20 mm (0.79 in)
   Measuring Point ② 90 mm (3.54 in)
   Measuring Point ③ 160 mm (6.30 in)

Cylinder Liner Bore — mm (in)

	Standard	Limit
4HF1 4HF1-2	112.021 - 112.050 (4.4103 - 4.4114)	112.20 (4.417)
4HG1 4HG1-T	115.021 - 115.050 (4.5284 - 4.5295)	115.20 (4.535)
4HE1-T 4HE1-TC	110.041 - 110.080 (4.3323 - 4.3338)	110.23 (4.340)

CAUTION:
It is most important that the correct piston grade be used. Failure to select the correct piston grade will result in engine failure. Always measure the cylinder bore and select the correct piston grade.

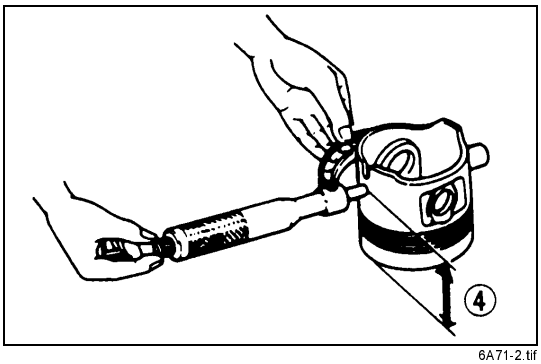

6A71-2.tif

2) Measure the piston outside diameter (Reference).
Piston Measuring Point ④: 82 mm (3.23 in)

Cylinder Liner and Piston Clearance — mm (in)

4HF1 / 4HF1-2: 0.081 - 0.113 (0.0032 - 0.0044)
4HG1 / 4HG1-T: 0.081 - 0.116 (0.0032 - 0.0046)
4HE1-T / 4HE1-TC: 0.091 - 0.131 (0.0036 - 0.0052)

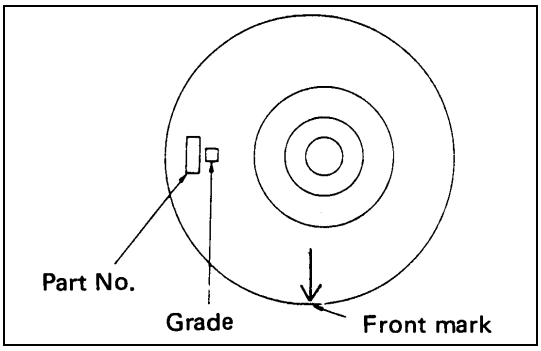

6A71-3.tif

The piston grade (i.e. A, B, C) is indicated in metal stamp on the piston upper face.

Piston Grade

Engine Model	Cylinder Liner Bore Diameter	Piston Service Grade	Piston Outside Diameter
4HF1 4HF1-2	112.041 - 112.060 (4.4111 - 4.4118)	-	111.947 - 111.960 (4.4074 - 4.4079)
4HG1 4HG1-T	115.040 - 115.060 (4.5291 - 4.5299)	-	114.944 - 114.959 (4.5253 - 4.5259)
4HE1-T 4HE1-TC	110.066 - 110.075 (4.3333 - 4.3337)	AX	109.944 - 109.959 (4.3285 - 4.3291)
		CX	109.960 - 109.975 (4.3291 - 4.3297)

CAUTION:
Cylinder liner kit clearances are preset. However, the cylinder liner installation procedure may result in slight decreases in cylinder liner clearances. Always measure the cylinder linner clearance after installation to be sure that it is correct.

REASSEMBLY

55. Cylinder Block

Use compressed air to thoroughly clean the inside and outside surfaces of the cylinder body, the oil holes, and the water jackets.

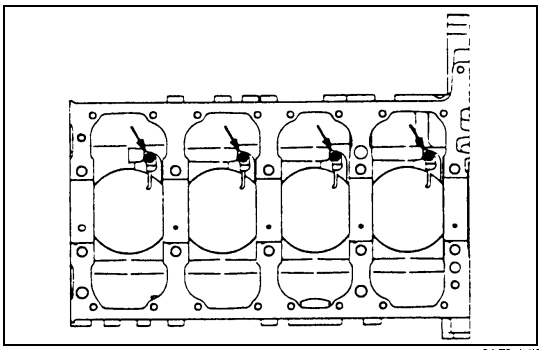
6A72-1.tif

54. Oiling Jet

1) Install the oiling jets together with the check valves. Take care not to damage the oiling jet nozzles.
2) Tighten the check valves and oiling jets to the specified torque.

Check Valve and Oiling Jet Torque	N•m (kg•m/lb•ft)
21 (2.1/15)	

53. Crankshaft Bearing Upper
52. Thrust Bearing Upper
51. Crankshaft Assembly
50. Crankshaft Bearing Lower
49. Thrust Bearing Lower
48. Crankcase

Above works refer to “CRANKSHAFT” section in this manual.

47. Piston and Connecting Rod Assembly
46. Connecting Rod Bearing
45. Connecting Rod Cap

Above works refer to “PISTON AND CONNECTING ROD” section in this manual.

44. Oil Pump Assembly
43. Idle Gear B Shaft

Idle Gear B Shaft Bolt Torque	N•m (kg•m/lb•ft)
31 (3.2/23)	

Apply the engine oil to the idle gear shaft after installation.

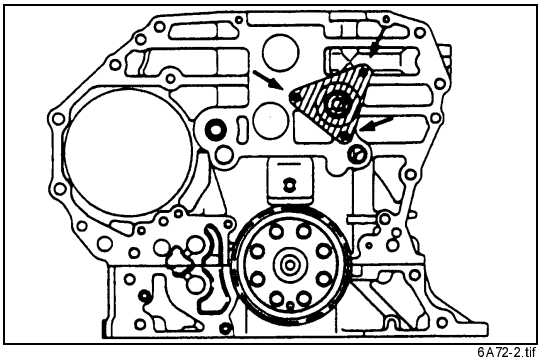
6A72-2.tif

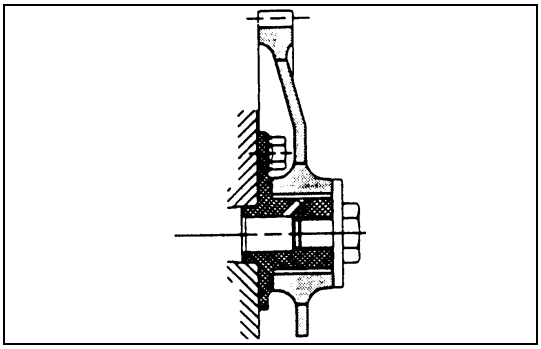

6A73-1.tif

42. Idle Gear B

The face of the idle gear B with longer boss should be positioned toward the rear side shown in the illustration.

Idle Gear B Bolt Torque	N•m (kg•m/lb•ft)
110 (11.2/81)	

41. Idle Gear A

40. Flywheel Housing

39. Power Steering Pump Idle Gear

38. Power Steering Pump Idle Gear Cover

Above works refer to “OIL PUMP” section in this manual.

37. Oil Thermo Valve

36. Front Retainer

Above works refer to “CRANKSHAFT” section in this manual.

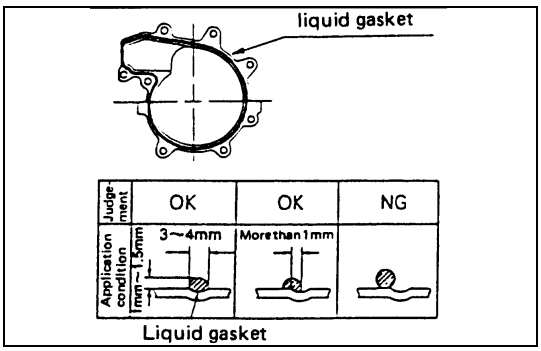

6A73-3.tif

35. Water Pump Assembly

1) Apply 3mm-4mm bead of the recommended liquid gasket (Three Bond 1207C) or its equivalent on the water pump fitting surface.
2) Install the water pump to the front retainer.

Water Pump Bolt Torque	N•m (kg•m/lb•ft)
24 (2.4/17)	

- Install the water pump within 7 minutes after application of liquid gasket.
- For the dislocation of liquid gasket, refer to the illustration.

CAUTION:

The water pump clamping bolt is also used to tighten the front retainer. So, install the water pump before liquid gasket gets dry immediately after installation of the front retainer.

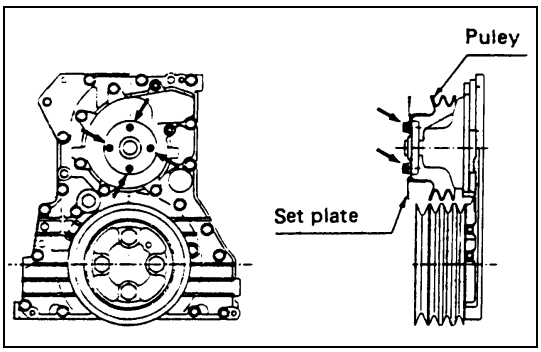

6A73-2.tif

34. Water Pump Pulley

Water Pump Pulley Bolt Torque	N•m (kg•m/lb•ft)
24 (2.4/17)	

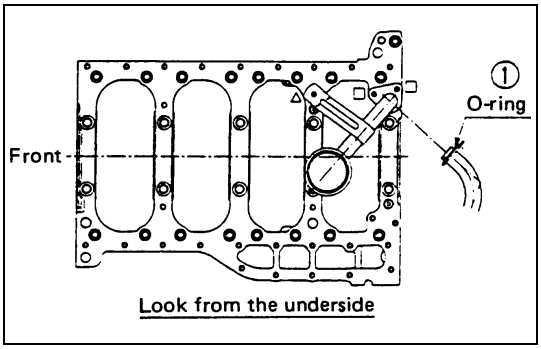

6A74-1.tif

33. Oil Pump Strainer

Install the O-ring ① to the oil pump strainer pipe and install the oil pump strainer to the cylinder body shown in the illustration.

Oil Pump Strainer Bolt Torque	N•m (kg•m/lb•ft)
24 (2.4/17)	

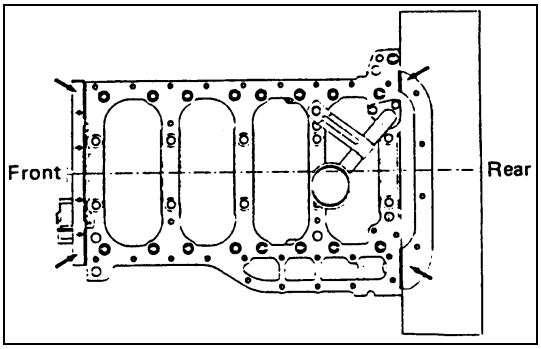

6A74-2.tif

32. Oil Pan

1) Apply a 3 mm (0.1inch) bead of recommended liquid gasket (Three Bond 1207C) or its equivalent to the shaded areas shown in the illustration.

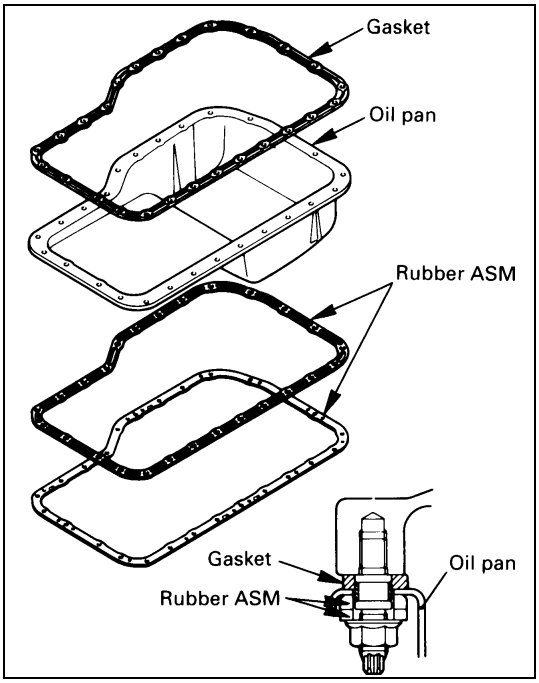

6A74-3.tif

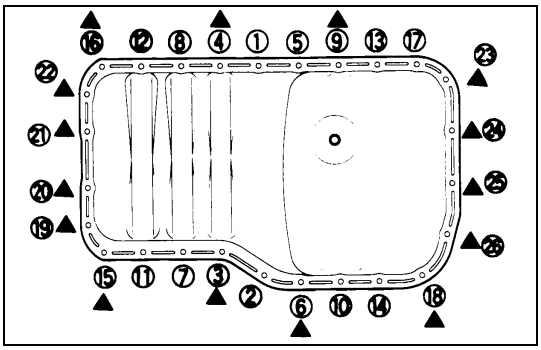

6A74-4.tif

3) Tighten the oil pan nuts and bolts to the specified torque in the numerical order as shown in the illustration.

▲ marks are located on nut positions.

Oil Pan Nuts and Bolts Torque	N•m (kg•m/lb•ft)
11 (1.1/8)	

31. Spacer Rubber (NKR model only)

Spacer Rubber Bolt Torque	N•m (kg•m/lb•ft)
76 (7.7/56)	

30. Crankshaft Rear Slinger
29 Crankshaft Rear Oil Seal
28. Flywheel Assembly
27. Crankshaft Front Slinger
26. Crankshaft Front Oil Seal
25. Crankshaft Damper Pulley

Above works refer to “CRANKSHAFT” section in this manual.

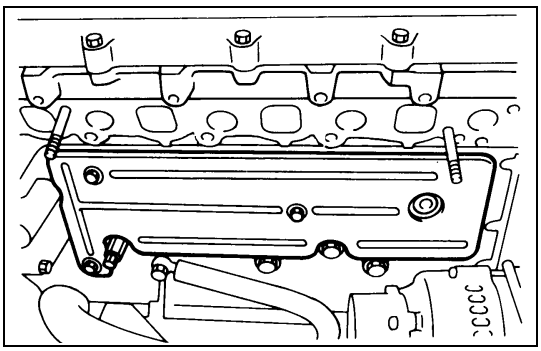
6A75-1.tif

24. Cover

Cover Bolt Torque	N•m (kg•m/lb•ft)
13 (1.3/9)	

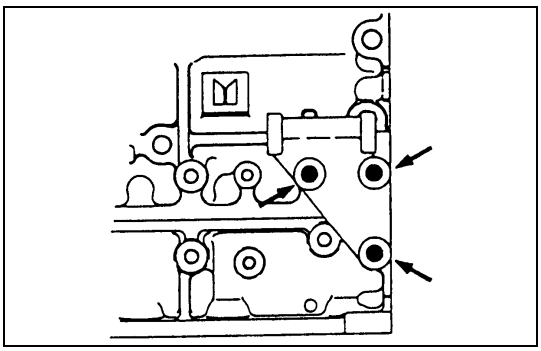
6A75-2.tif

23. Generator Bracket

Generator Bracket Bolt Torque	N•m (kg•m/lb•ft)
48 (4.9/35)	

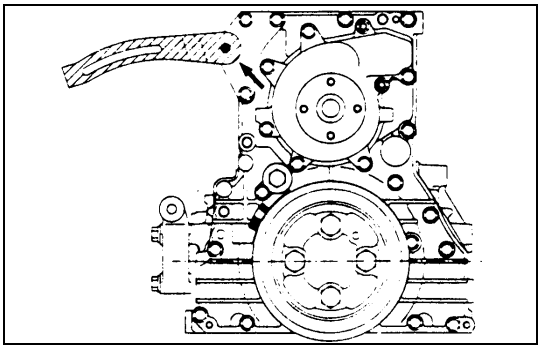
6A75-3.tif

22. Fan Belt Adjust Plate

Install the adjust plate and temporarily tighten the adjust plate bolt.

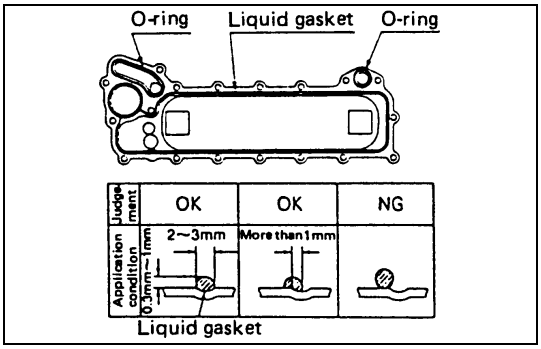

6A76-1.tif

21. Oil Cooler Assembly

1) Apply 2 mm - 3 mm bead of the recommended liquid gasket (Three Bond 1207C) or its equivalent on the oil cooler fitting surface.
2) Apply a coat of engine oil to the O-rings (2 pieces) and install the O-rings to the oil cooler.

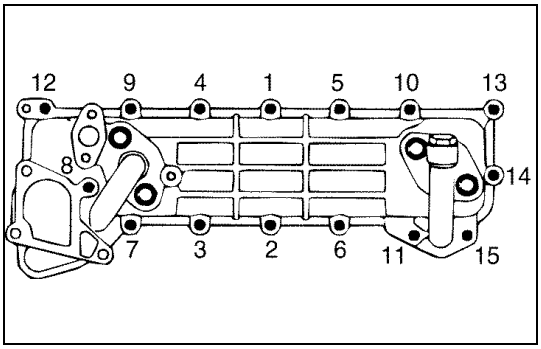

050LX032.tif

NOTE:

Take care that the O-ring is not smeared with liquid gasket.

- Install it within 7 minutes after application of liquid gasket.
- For the dislocation of liquid gasket, refer to the illustration.

3) Tighten the oil cooler bolts and nut to the specified torque a little at a time in the sequence shown in the illustration.

Oil Cooler Bolt and Nut Torque	N•m (kg•m/lb•ft)
24 (2.4/17)	

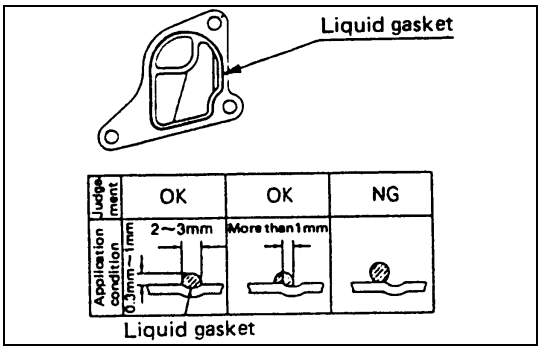

6A76-3.tif

20. Water Suction Pipe

1) Apply 2 mm - 3 mm bead of the recommended liquid gasket (Three Bond 1207C) or its equivalent on the groove of the water suction pipe fitting surface.
2) Install the water suction pipe to the oil cooler.
- For the dislocation of liquid gasket, refer to the illustration.

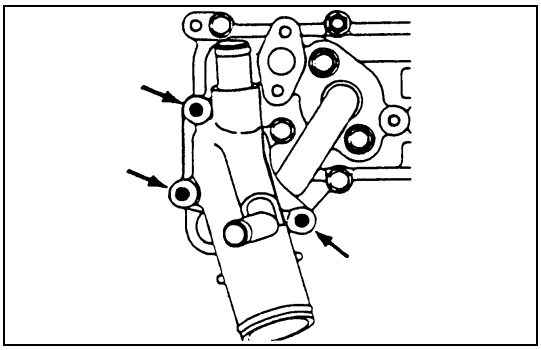

6A76-4.tif

Water Suction Pipe Bolt and Nuts Torque	N•m (kg•m/lb•ft)
24 (2.4/17)	

NOTE:

Install the water suction pipe immediately after the installation of the oil cooler.

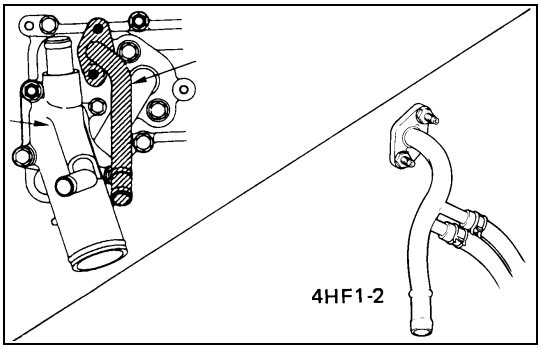

6A77-1.tif

19. Heater Pipe

1) Install the O-ring to the heater pipe.
2) Install the heater pipe to the oil cooler.

Heater Pipe Bolt Torque	N•m (kg•m/lb•ft)
24 (2.4/17)	

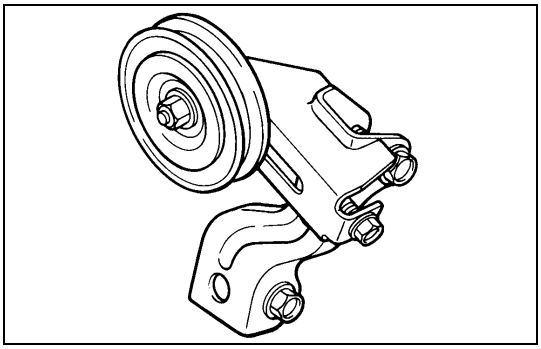

6A77-2.tif

18. Idle Pulley Bracket (If equipped with A/C)

Idle Pulley Bracket Bolt Torque	N•m (kg•m/lb•ft)
48 (4.9/35)	

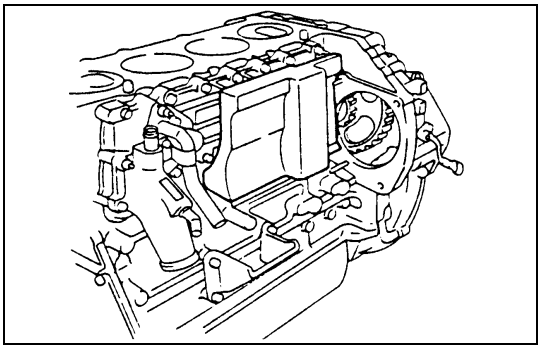

6A77-3.tif

17. Injection Pump Rubber Spacer

Stick the rubber spacer to the location indicated in the illustration with pressure sensitive adhesive double coated tape.

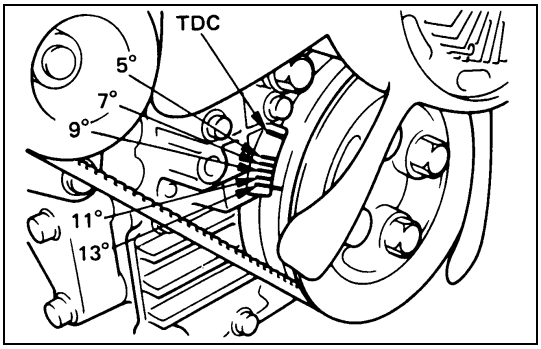

6A77-4.tif

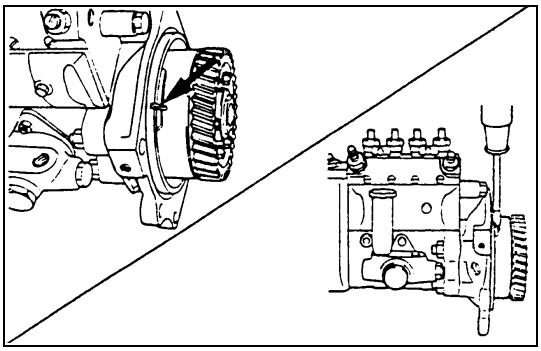

6A77-5.tif

16. Injection Pump Assembly (Except 4HF1-2)

1) Turn the crankshaft until the timing mark on the crankshaft damper pulley is aligned with “13°” line.

NOTE:

BTDC 13° to be aligned with here is an angle at which the injection pump is installed, and has nothing to do with the injection timing.

2) Remove the inspection hole plug from the cylinder body.
3) Install the O-ring to the injection pump bracket.
4) Align the injection pump bracket slit with the timer slit.
5) Install the injection pump assembly to the cylinder body.

NOTE:

When the injection pump has a poor gear engagement while installing the assembly to the cylinder body, insert a screwdriver into the slit on the timer peripheral with the pump bracket slit used as a guide, and move it up and down to get it into forcibly.

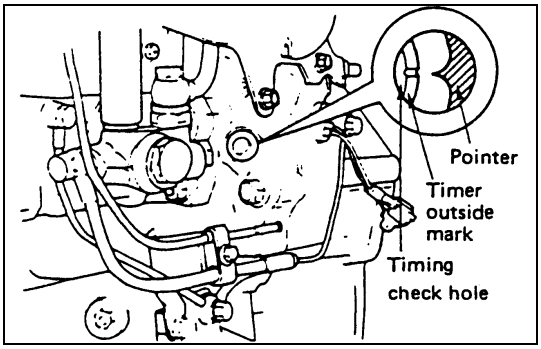

6A78-1.tif

6) After installation of the injection pump, the injection timing can be checked through the timing check hole provided to the injection pump bracket.

Set the No.1 cylinder to BTDC (Injection timing of each engine model) on the compression stroke. When the pointer of the timing check hole comes in line with the mark on the timer periphery of the injection pump as shown in the illustration, the injection timing is normal.

After completion of the injection timing check, tighten the check hole plug to the specified torque.

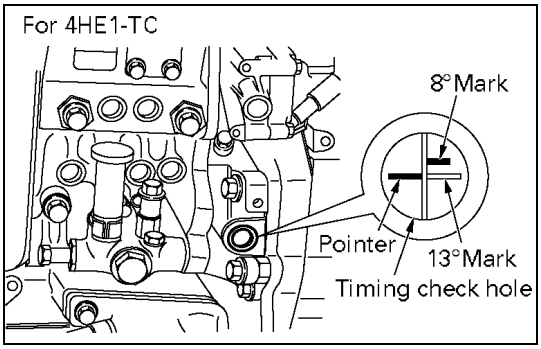

140RW080.tif

Injection Timing	deg
4HF1: 4HE1-TC	BTDC 8
4HG1	BTDC 9
4HG1-T	BTDC 7 (Except Colombia) BTDC 9 (For Colombia)
4HE1-T	BTDC 7

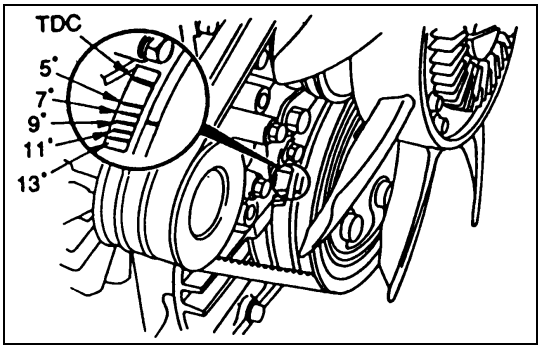

6A78-3.tif

7) Turn the crankshaft until the timing mark on the crankshaft damper pulley is aligned with “8°” line.

NOTICE: Position in its normal rotating direction. (for 4HE1-TC only)

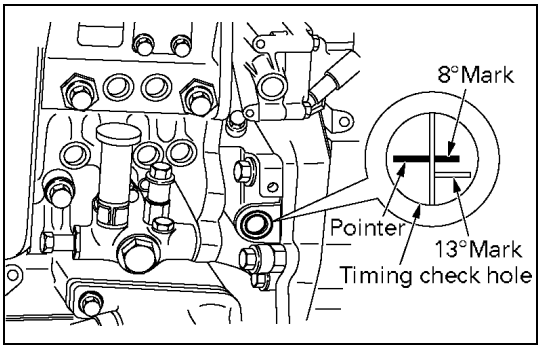

140RW079.tif

8) Adjust injection pump downward so that the “8°” comes to postion in the timing check hole.

(for 4HE1-TC only)

NOTE:

When ever the injection pump is replaced, be sure to adjust the injection timing for the details of the adjustment, refer to the “SECTION 00 SERVICING: INJECTION TIMING INSPECTION AND ADJUSTMENT.”

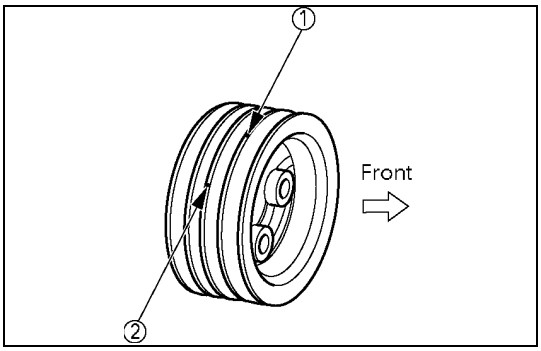

012RW133.tif

Note:

In case the crank pulley has two marks as illustrated, ① BTDC 49° mark on the second crest and ② TDC mark on the third crest (as viewed from the front side), be sure to set at the mark ②. (If there are two different marks on one and same crest, set at the mark which comes second when rotated in the normal direction.)

The mark ① is used when installing the injection pump for 4HF1-2.

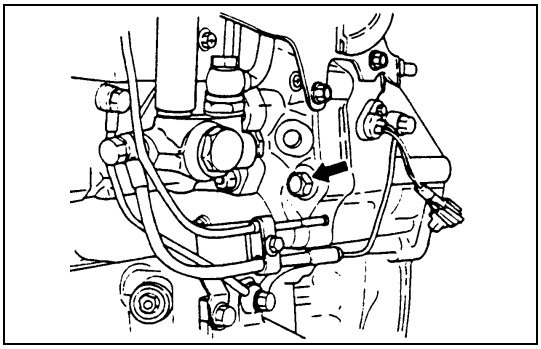
6A79-1.tif

9) Tighten the injection pump bracket nuts and bolts to the specified torque.

Injection Pump Bracket Nut and Bolt Torque	N•m (kg•m/lb•ft)
48 (4.9/35)	

10) Install the injection pump rear bracket.

Injection Pump Rear Bracket Bolt Torque	N•m (kg•m/lb•ft)
48 (4.9/35)	

11) Install the inspection hole plug.

Inspection Hole Plug Torque	N•m (kg•m/lb•ft)
48 (4.9/35)	

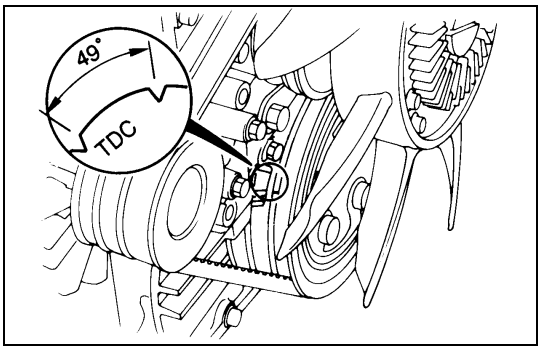

6A79-2.tif

16-1 Injection Pump Assembly (4HF1-2 model only)

1) Turn the crankshaft to set No.1 cylinder to 49° before TDC in its compression stroke.
   (49° is a pump installing alignment angle, not related to injection timing.)

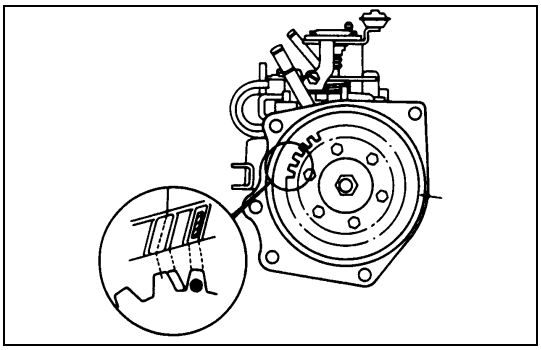
6A79-3.tif

2) Install O-ring to the injection pump.
3) Apply paint on the ● (Z) marked side of the injection pump gear.
4) Align the pump bracket mark with the tooth (under side of the pump) just before the ● (Z) marked tooth.
5) Insert the pump using the block side of stud bolt as a guide.

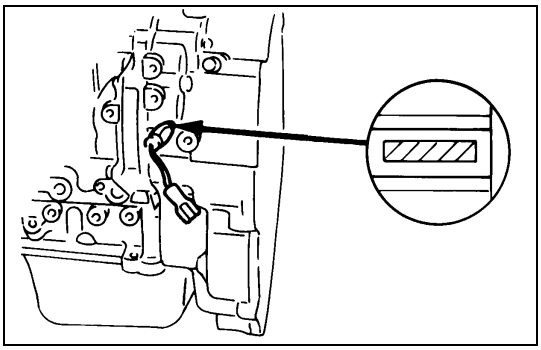
6A79-4.tif

6) After installing the injection pump, remove the tachometer sensor from the housing, and make sure that the painted gear is at the center of the sensor mounting hole.
7) Tighten injection pump clamping bolt and nut to specified torque:

Bolt Tightening Torque	N•m (kg•m/lb•ft)
48 (4.9/35)	

Nut Tightening Torque	N•m (kg•m/lb•ft)
24 (2.4/17)	

8) With reference to Injection Timing Check & Adjustment, set No. 1 Cylinder to 12° before its TDC.

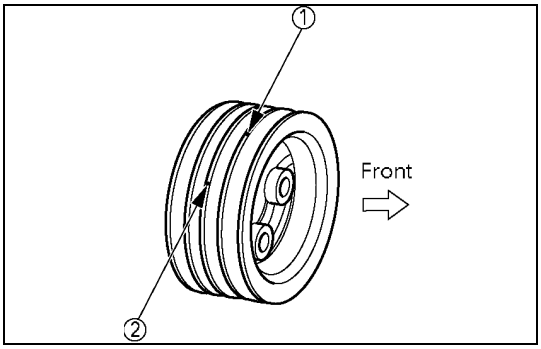

012RW133.tif

Note:

In case the crank pulley has two marks as illustrated, ① BTDC 49° mark on the second crest and ② TDC mark on the third crest (as viewed from the front side), be sure to set at the mark ②. (If there are two different marks on one and same crest, set at the mark which comes second when rotated in the normal direction.)

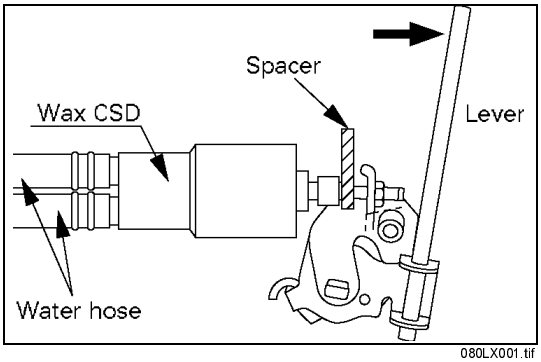

080LX001.tif

Injection Timing Check (4HF1-2 model only)

1. Set No. 1 Cylinder to the TDC in the compression stroke.
2. Disconnect Injection Pipe.
3. Put down Wax CSD lever, insert a spacer (10 - 20 mm/0.39 - 0.47 in) thick between the plunger and adjust bolt, and cancel the Wax CSD.

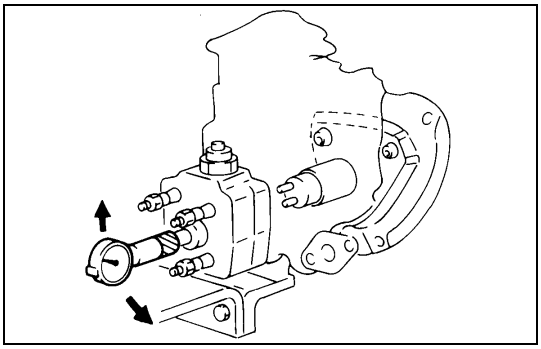
6A00-3.tif

4. Remove the pump rear plug, connect a dial gage and set the lift at 1 mm (0.039 in).
   Special Tool
   Measuring device: 5-8840-0145-0

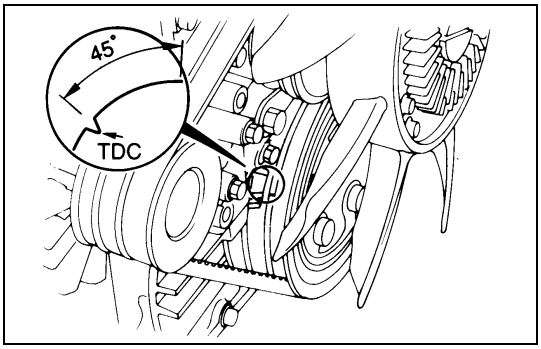

6A80-4.tif

5. Set the crankshaft damper pulley TDC mark to the pointer or 45° before TDC.
6. Set the dial gage to the “0” position.
7. Turn the crankshaft leftwise and rightwise a little and make sure that the needle stays in the “0” position.

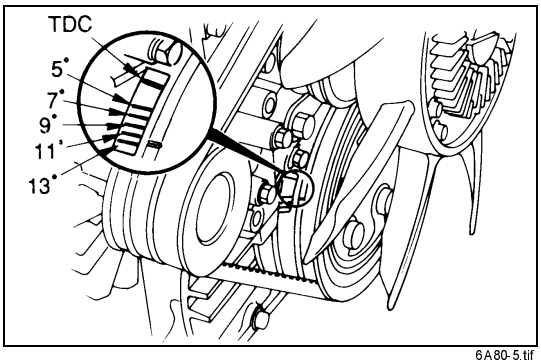

6A80-5.tif

8. Turn the crankshaft in the normal direction and read the measuring device’s indication at the 12° before TDC position.

NOTE:

As there is no 12° mark, set midway between the 11° and 13° marks.

Standard value: 0.5 mm (0.0197 in)

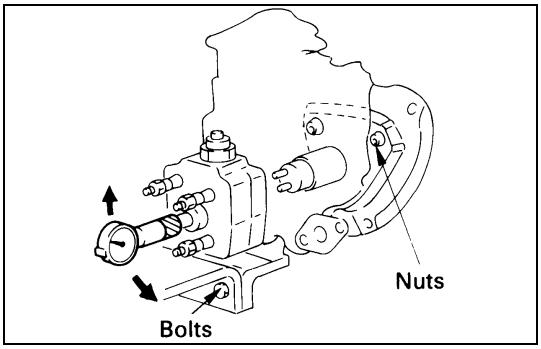

6A81-1.tif

Injection Timing Adjustment (4HF1-2 model only)

If injection timing is out of the specified range, follow the following procedure for adjustment:

1. Loosen injection pump fiixng nuts and bracket bolt.
2. Adjust the mounting angle of injection pump:
   - If injection timing is too fast, bring the injection pump closer to the engine.
   - If injection timing is too slow, put the injection pump more distant from the engine.
3. When the dial gage has indicated the specified value, tighten the fixing nuts and bolt to specified torque:

Nut Tightening Torque	N•m (kg•m/lb•ft)
24 (2.4/17)	

Bolt Tightening Torque	N•m (kg•m/lb•ft)
48 (4.9/35)	

4. Disconnect the dial gage, install and tighten the plug to specified torque. (Make sure of a copper washer being attached to the plug)

Plug Tightening Torque	N•m (kg•m/lb•ft)
17 (1.7/12)	

5. Release the wax CSD and connect the injection pipe.

Pipe Sleeve Nut Tightening Torque	N•m (kg•m/lb•ft)
29 (3.0/22)	

Note:

If there are two marks on the crank pulley, the front side of mark is for setting BTDC 49° and the rear side of mark is for setting TDC.

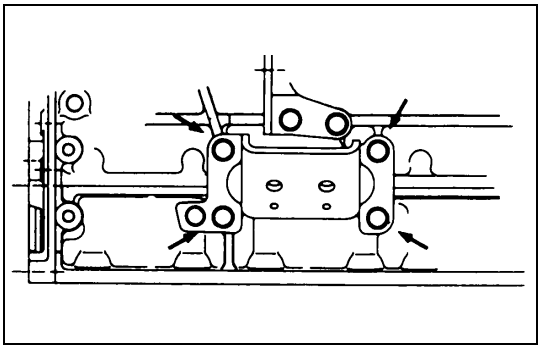

6A82-1.tif

15. Engine Foot

Engine Foot Bolt Torque	N•m (kg•m/lb•ft)
51 (5.2/38)	

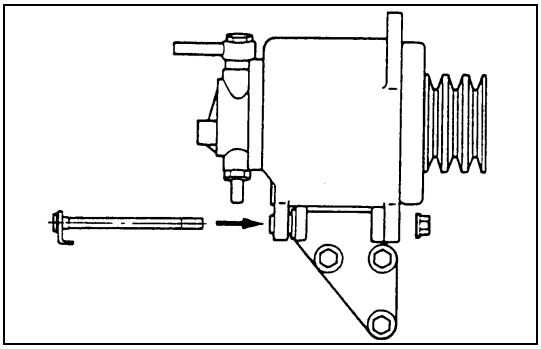

6A82-2.tif

14. Generator

NOTE:

Before tightening the generator securely, tighten it temporarily in advance after adjusting the fan belt.

Put the lower fixing bolt through from the rear side and tighten it with the nut on the front side as shown in the illustration.

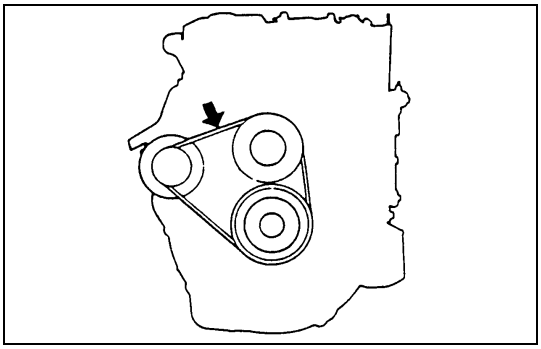

6A82-3.tif

13. Fan Belt

Check the drive belt tension.

Depress the drive belt mid-portion with a 10 kg (22 lb/ 98 N) force.

Drive Belt Deflection	mm (in)
8 - 12 (0.31 - 0.47)..... New belt	
10 - 14 (0.39 - 0.55)..... Reuse belt	

Check the drive belt for cranking and other damage.

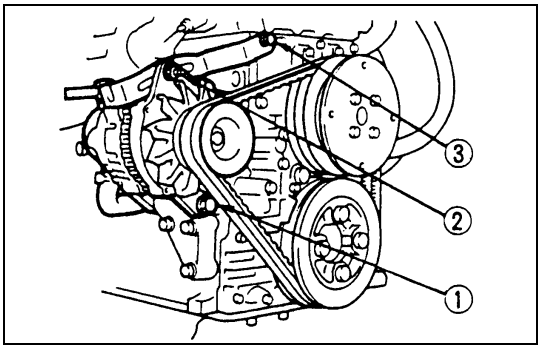

6A82-4.tif

Fan Belt Adjustment

Fan belt tension is adjusted by moving the alternator.

Torque	N•m (kg•m/lb•ft)
①	40 (4.1/30)
②	24 (2.4/17)
③	46 (4.7/34)

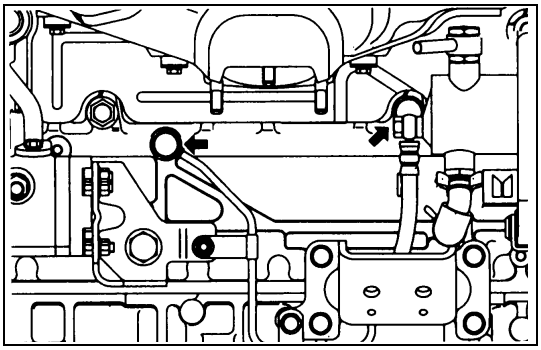

6A82-5.tif

12. Vacuum Pump Rubber Hose

11. Vacuum Pump Oil Pipe

Cylinder Body Side	N•m (kg•m/lb•ft)
41 (4.2/30)	

Generator Side	N•m (kg•m/lb•ft)
23 (2.3/17)	

10. Fuel Pipe Bracket

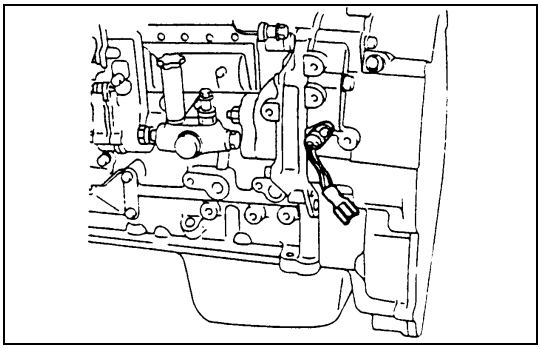

6A83-1.tif

9. Tachometer Sensor

Tachometer Bolt Torque	N•m (kg•m/lb•ft)
8 (0.8/6)	

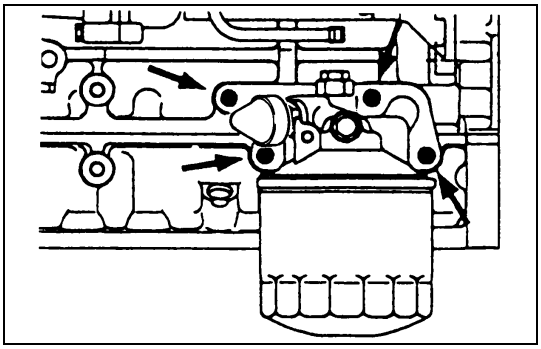

6A83-2.tif

8. Oil Filter Assembly

Oil Filter Bolt Torque	N•m (kg•m/lb•ft)
48 (4.9/35)	

7. Oil Pipe

Oil Pipe Joint Bolt Torque	N•m (kg•m/lb•ft)
17 (1.7/12)	

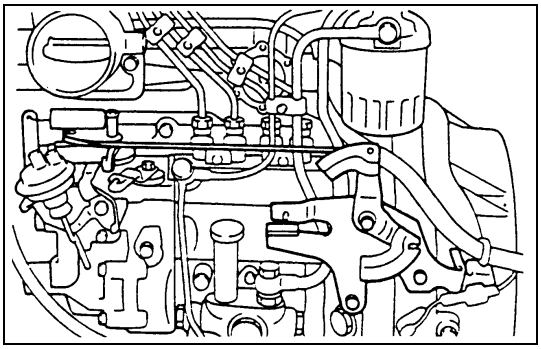

6A83-3.tif

6. Engine Control Lever Assembly

Engine Control Lever Bolt Torque	N•m (kg•m/lb•ft)
24 (2.4/17)	

5. Engine Control Wire

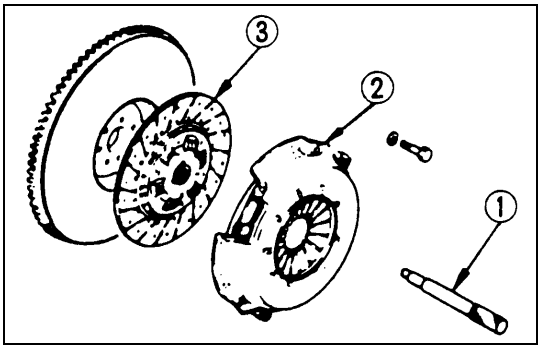

6A83-4.tif

4. Driven Plate

Use the clutch pilot aligner to install the driven plate.

Clutch Pilot Aligner: 5-8840-2240-0

① Clutch pilot aligner

② Clutch pressure plate assembly

③ Driven plate

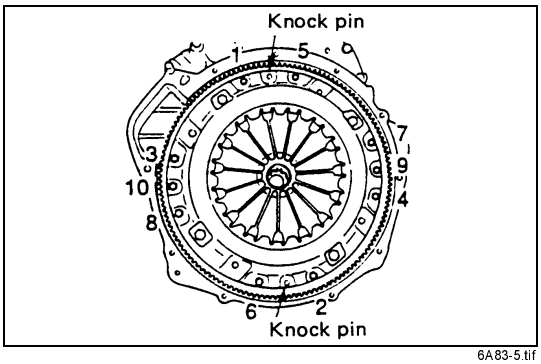

6A83-5.tif

Clutch Pressure Plate Assembly

1) Align the clutch pressure plate with the flywheel knock pin.

2) Tighten the pressure plate bolts to the specified torque in numerical order.

Clutch Pressure Plate Bolt Torque	N•m (kg•m/lb•ft)
40 (4.1/30)	

2. Cylinder Head Gasket

1) When any of the cylinder block, crankshaft, crankshaft bearing, connecting rod, connecting rod bearing, and piston is replaced with a new one, cylinder head gasket thickness should be determined newly.
2) When replacing the cylinder head gasket alone without replacing any of the parts mentioned in 1) above, the gasket to be used should be the same grade as the one used before.
3) Correct cylinder head gasket thickness is important. Installing the wrong thickness gasket can result in greatly reduced engine performance.
4) There are three cylinder head gaskets available.

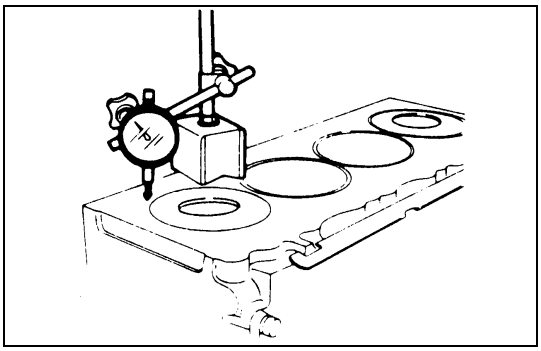

6A84-1.tif

Piston Head Projection Measurement

- Select a cylinder head gasket.
- Clean thoroughly the top faces of the piston head and the cylinder body.

- Use the dial gauge to measure the piston head projection. Take measurements at two locations for each cylinder.
- The measurement points of the piston head and the reference point of the cylinder body are shown in the illustration left.

Measurement points:	Points G1 and G2 of the piston head
Reference point:	Point R on the top face of the cylinder body

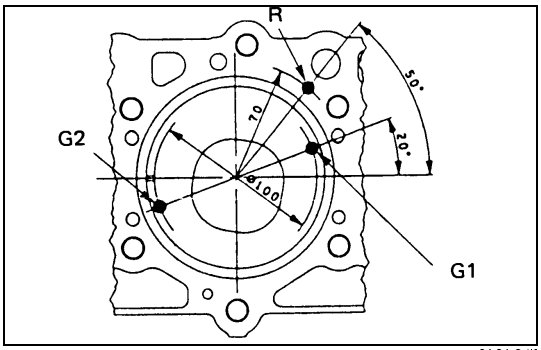

6A84-2.tif

NOTE:

Note that there are three types of a cylinder head gasket available as shown in the table below, according to the piston projection.

- For each cylinder, calculate the average value (Ti) of the piston projection.
- Find the maximum value (Timax) of the average value (Ti) of each cylinder.
- Based on the Timax obtained, select a gasket of the appropriate grade.

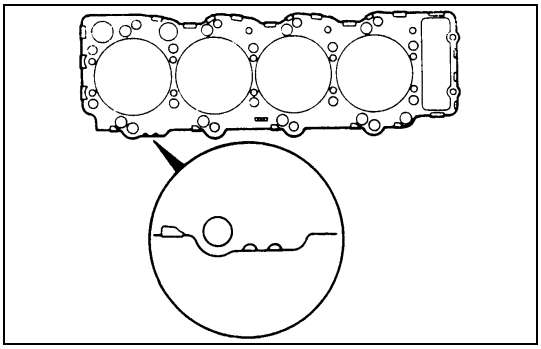

6A85-1.tif

4HF1/4HF1-2/4HG1-T

Cylinder Head Gasket Selection mm (in)

Gasket Grade	Ti max	Gasket Thickness (Reference)
A	0.579 - 0.659 (0.0228 - 0.0259)	1.70 (0.0669)
B	0.659 - 0.739 (0.0259 - 0.0291)	1.75 (0.0689)
C	0.739 - 0.819 (0.0291 - 0.0322)	1.80 (0.0708)

4HE1-T/4HE1-TC

Cylinder Head Gasket Selection mm (in)

Gasket Grade	Ti max	Gasket Thickness (Reference)
A	0.529 - 0.609 (0.0208 - 0.0240)	1.70 (0.0669)
B	0.609 - 0.679 (0.0240 - 0.0267)	1.75 (0.0689)
C	0.679 - 0.759 (0.0267 - 0.0300)	1.80 (0.0708)

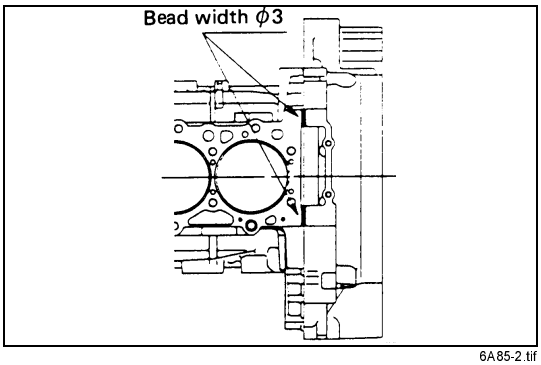

6A85-2.tif

- Apply a 3 mm (0.1 inch) bead or recommended liquid gasket or its equivalent to the shaded areas shown in the illustration.

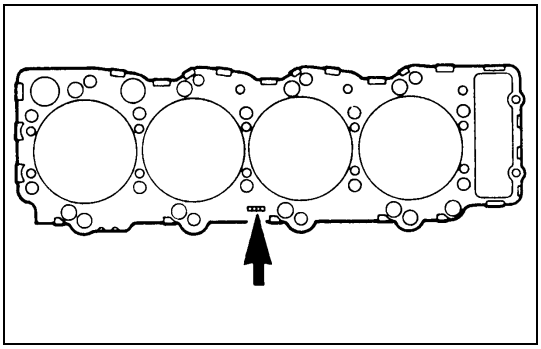

6A85-3.tif

- Install the cylinder head gasket with its “PART NUMBER” mark facing up and toward the left of the engine.

CAUTION:

Do not reuse the cylinder head gasket.

1. **Cylinder Head Assembly**

   Above works refer to “CYLINDER HEAD” section 6A3 in this manual.

SECTION 6A3

ENGINE

(4HF1 / 4HF1-2 / 4HE1-T / 4HE1-TC / 4HG1 / 4HG1-T)

CONTENTS

PAGE

General Description ..... 6A3 - 2
Engine Mount (RH, LH) ..... 6A3 - 10
Cylinder Head Cover ..... 6A3 - 12
Inlet Cover/Inlet Case ..... 6A3 - 14
Exhaust Manifold ..... 6A3 - 20
Timing Gear Replacement ..... 6A3 - 23
Valve Guide Seal & Valve Spring ..... 6A3 - 33
Rocker Arm Shaft Assembly ..... 6A3 - 37
Camshaft Assembly ..... 6A3 - 39
Cylinder Head ..... 6A3 - 42
Circumference Parts Of Cylinder Head ..... 6A3 - 52
Oil Filter Assembly ..... 6A3 - 57
Oil Filter Cartridge ..... 6A3 - 59
Oil Cooler ..... 6A3 - 60
Oil Pan ..... 6A3 - 69
Oil Pump Assembly ..... 6A3 - 72
Oil Relief Valve ..... 6A3 - 77
Piston, Piston Ring, Piston Pin and Connecting Rod ..... 6A3 - 78
Flywheel and Pilot Bearing ..... 6A3 - 83
Crankshaft Front Oil Seal ..... 6A3 - 88
Crankshaft Rear Oil Seal ..... 6A3 - 93
Crankshaft ..... 6A3 - 98
Cylinder Block ..... 6A3 -113
Engine Assembly ..... 6A3 -135

GENERAL DESCRIPTION

The engine is a four-cycle, four-cylinder, in-line, direct fuel injection type diesel engine with the piston displacement of 4,334 cc. It features a gear driven OHC (overhead camshaft) timing train and the unique mechanisms and systems designed for outstanding cleanness, economy and durability. Its torque characteristics promise dynamic ride at high speed, high power at low speed, and smooth and continuous torque at medium to high ranges.

RIGHT SIDE VIEW

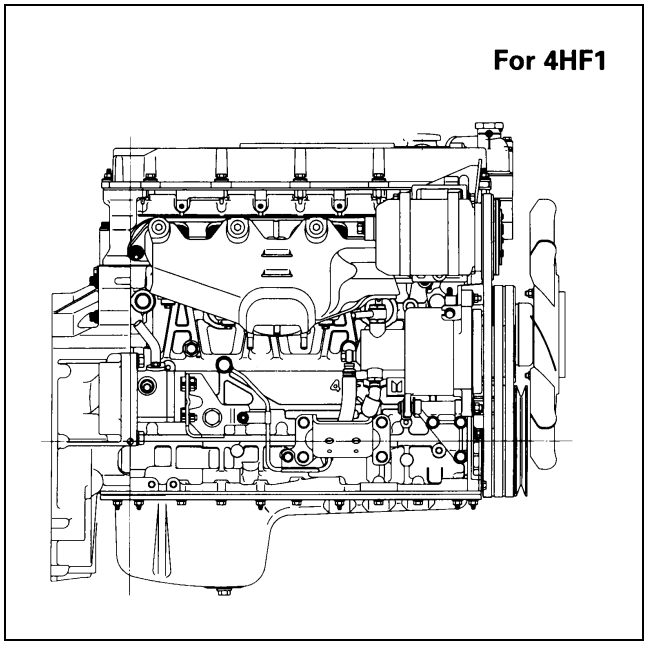

6A3-2-1.tif

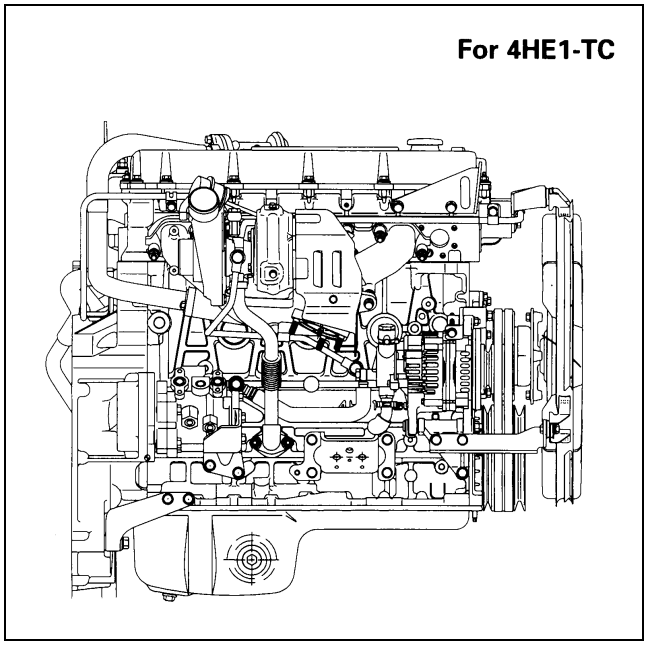

6A3-2-3.tif

LIFT SIDE VIEW

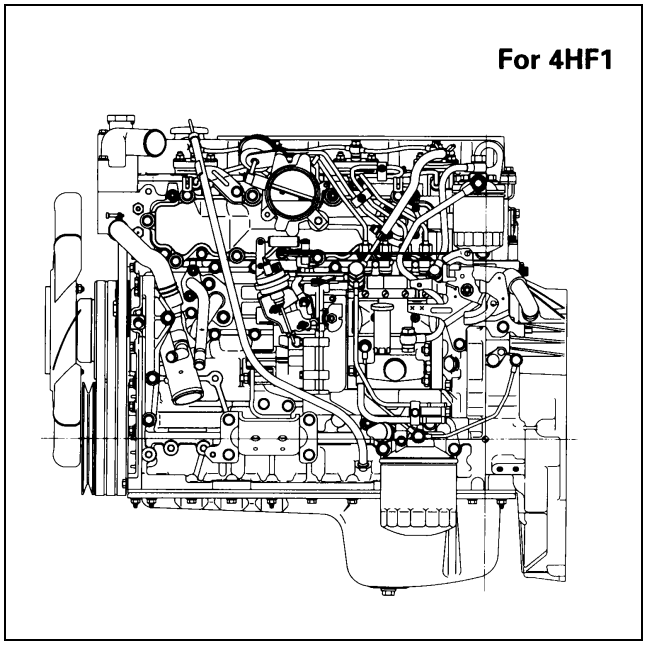

6A3-2-2.tif

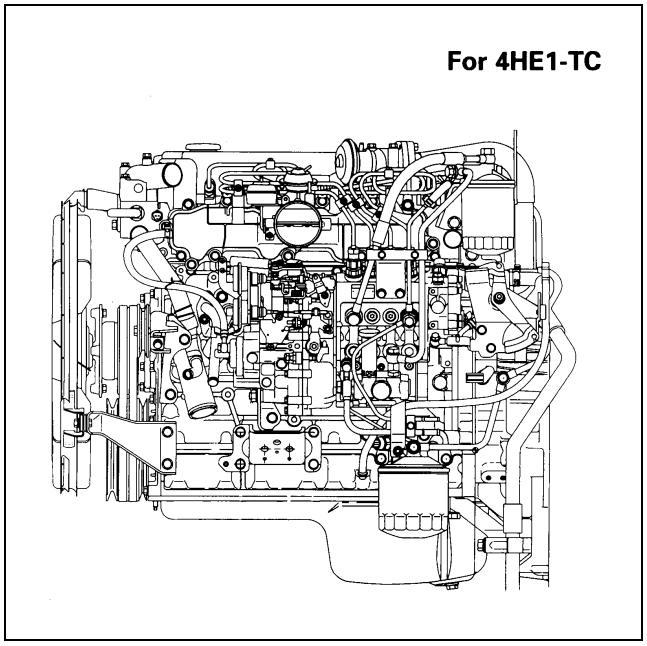

6A3-2-4.tif

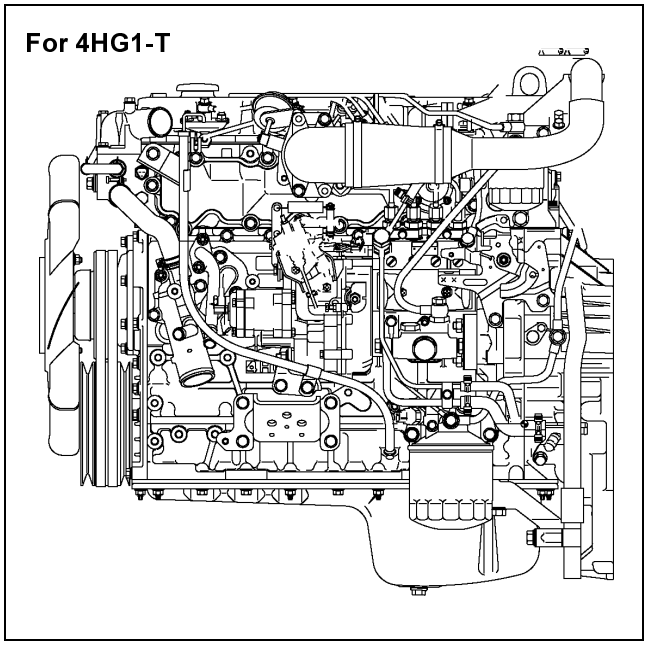

F06LX010.tif

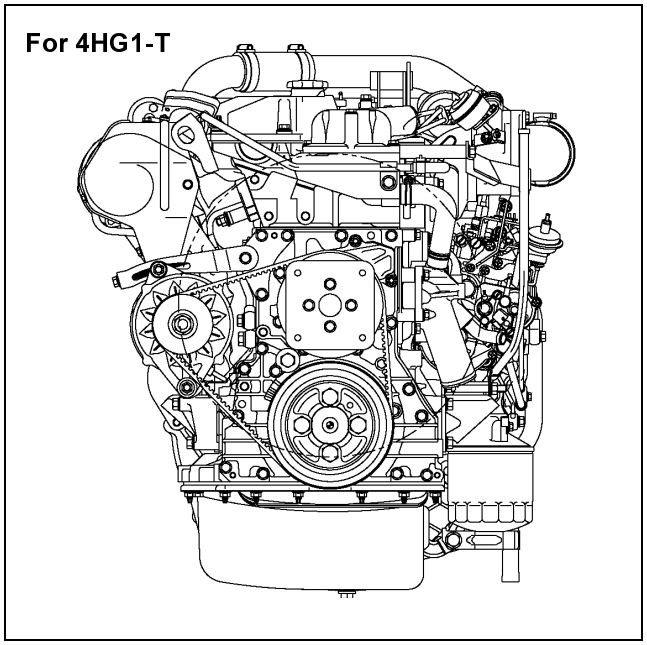

F06LX009.tif

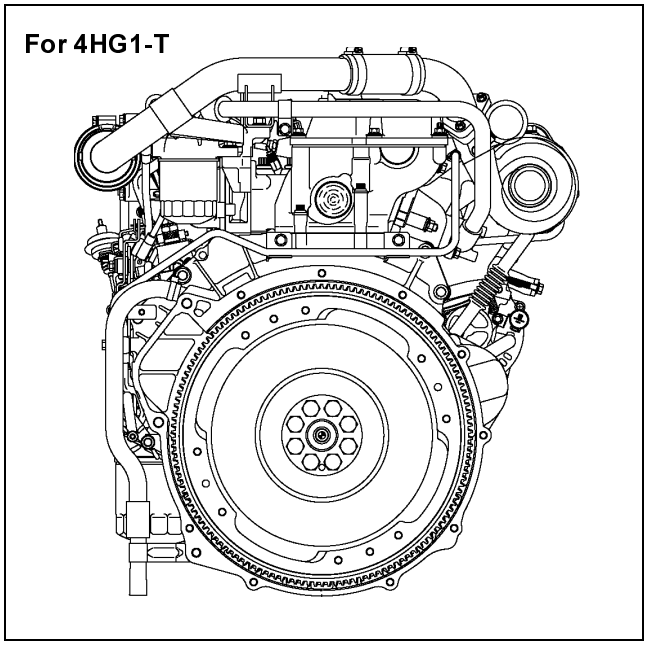

F06LX011.tif

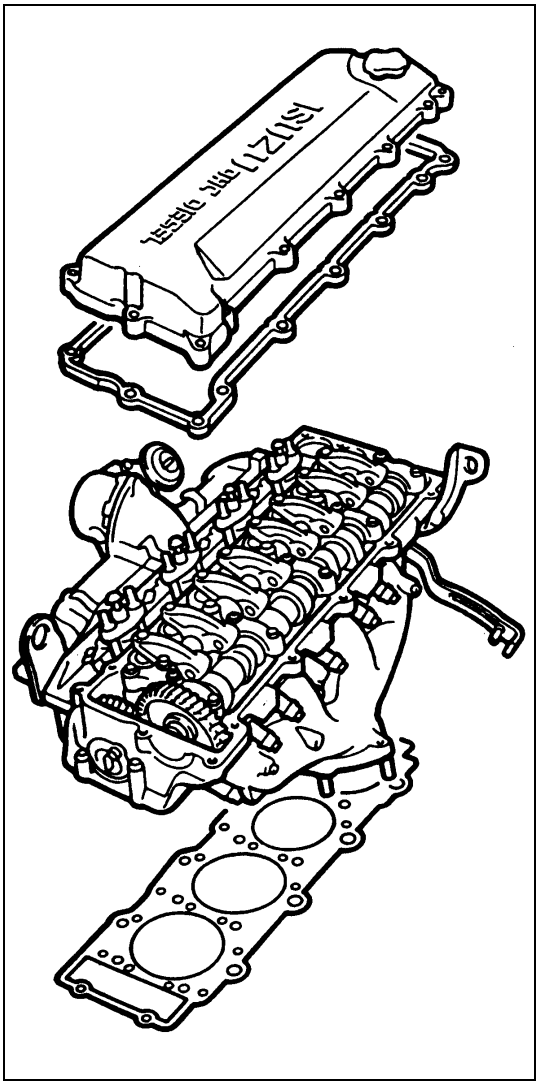

6A3-4-1.tif

CYLINDER HEAD

- The cylinder head is made of cast iron and has a crossflow layout with the intake system in the left side and the exhaust system in the right side, designed to reduce resistance in the intake and exhaust systems.
- The valve diameter is increased to offset the mass of the valve operating system reduced by the introduction of the OHC mechanism.

  In addition, the intake and exhaust ports are put in a smoother and less resistant layout to enhance intake and exhaust efficiency.
- The cylinder head gasket is of the laminated steel of least fatigue in combination with the angular cylinder head bolt tightening method, equally designed to increase reliability against gas and water leakage, in addition, selective assembly of gaskets of various thicknesses minimizes the wasted space between the piston and the cylinder head to maintain performance at a high level.
- The cylinder head cover is made of aluminum to reduce noise.

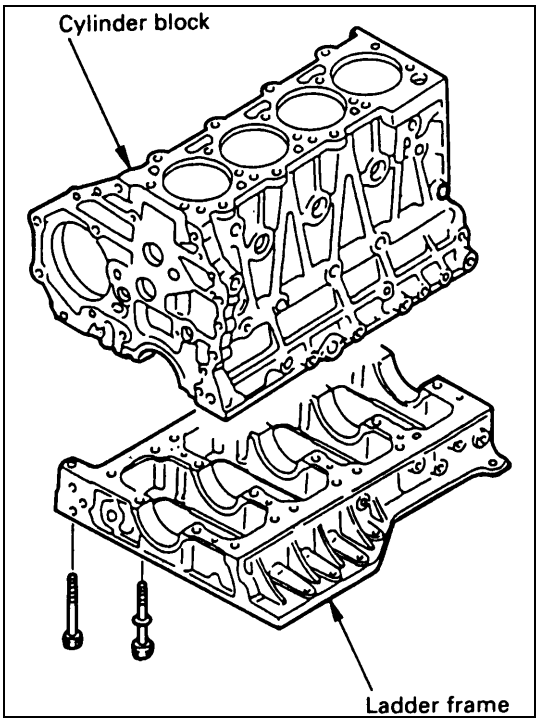

6A3-4-2.tif

CYLINDER BLOCK

- The cylinder block is made of cast iron having dry cylinder liner and five bearings.

  The bearing cap has a ladder frame construction integrating the crankcase to increase rigidity.
- The cylinder liner is made of thin iron plus special alloys and is combined with the chrome-plated piston ring to ensure good resistance against wear.
- The oil pan is made of vibration-damping steel to reduce noise.

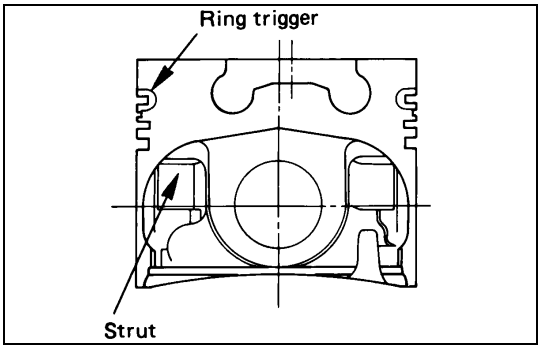

6A3-5-1.tif

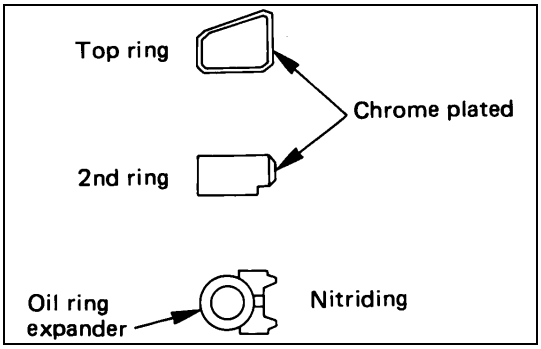

6A3-5-2.tif

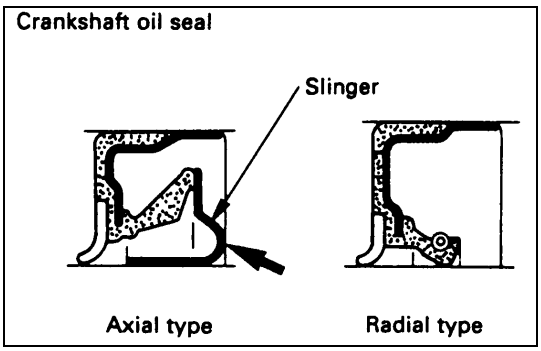

6A3-5-3.tif

PISTON, CONNECTING ROD, AND CRANKSHAFT

- The piston is made of aluminum alloy. A ring trigger is cast into the top ring groove and chrome plating is applied to four sides of the top ring to ensure sufficient strength and wear resistance of the ring and the ring groove. The piston bottom has a thermal flow shape to increase cooling efficiency of the oil jet. This design reduces thermal load while increasing rigidity (see figure).
- The combustion chamber has a square shelf of proven performance to ensure outstanding stability in exhaust gas control (see figure).
- The autothermatic piston and offset piston pin reduces piston flapping and other noise.
- The crankshaft is made of cast carbon steel with five bearings and eight counterweights to reduce revolution load to the bearing. The ladder frame design that integrates the bearing cap and the crankcase increases bearing rigidity. The angular tightening method of the bearing bolt further increases reliability and durability.
- The connecting rod is made of cast carbon steel and the cap is bolted by angular tightening method to maintain reliability.
- The bearing, as well as the crank journal and crank pin bearings, are made of Kelmet metal.

  Oil clearance is controlled accurately through selective assembly by thickness to reduce noise and increase reliability.
- The crankshaft has the axial type oil seal that drastically improves durability and reliability.

  Compared with the conventional radial type (lips in a radial orientation), the axial type oil seal has lips in an axial orientation to minimize lip wear. It also precludes lip peeling and damage, spring dislocation and other problems associated with the radial type oil seal (see figure).

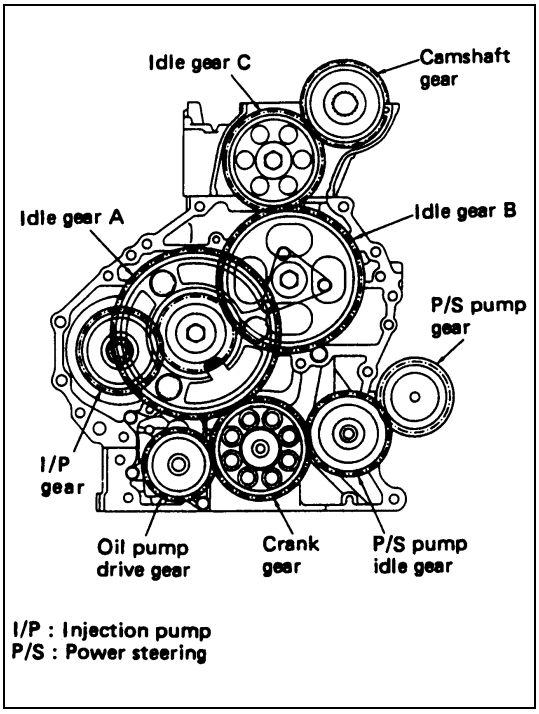

6A3-6-1.tif

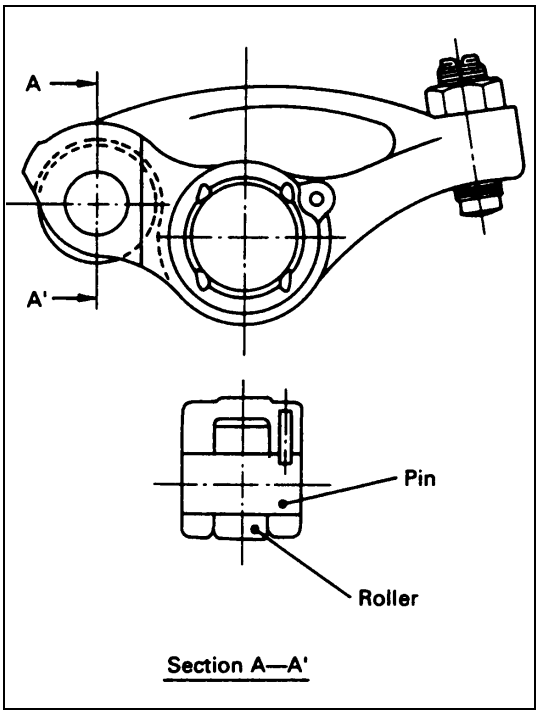

6A3-6-2.tif

VALVE TRAIN

- The gear train is located at the end of the cylinder block to minimize influence of the torsional vibration of the crankshaft and the radiant sound. Noise is further reduced, to the same level as a timing belt driven system, by integrating the crank gear with the crankshaft by shrink fit and by careful turning of the gear precision, teeth contact ratio of gear, backlash, bearing rigidity, neutral frequency, etc. (See figure).
- Gears are of the forged type. Gears are tufftrided to secure sufficient durability.
- The camshaft is made of carbon steel with five bearings. The cam's nose and the journal are induction-hardened to secure sufficient durability.
- The cam has a Fourier-dyne profile to maximize the intake and exhaust valve lifts and the valve opening and closing timing is optimized to increase intake and exhaust efficiency.
- The valve spring is a single spring having an eggshaped cross section to reduce weight while reducing stress. Coupled with the unique cam profile, the spring increases the jump-and bounce-free limit at high-speed operation to provide reserve characteristics.
- The rocker arm is made of diecast aluminum and is of the center pivot type having a roller. This increases reliability while reducing friction and contributes to increased power output and fuel efficiency (See figure).
- The rocker shaft is chrome plated to secure sufficient durability.

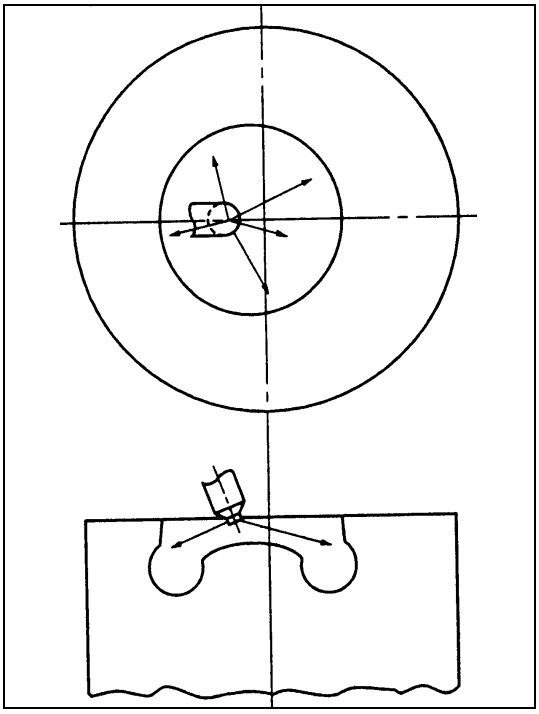

6A3-7-1.tif

FUEL SYSTEM

- The injection pump is of Bosch A type with the plunger outside diameter of 9.5mm and cam lift of 9mm.

  The plunger has a special notch for advancing the timing at starting.
- The governor is of a mechanical RLD type to ensure sustained power at high speed.
- The timer is of the SCDM(eccentric) type.
- The injection nozzle is of the P type to bring it as technically close as possible to the center of the combustion chamber. The nozzle inclination is also reduced to minimum to increase combustion efficiency. The nozzle has four jets and the valve opening pressure is set at 185kg/cm^2(2,630 psi, 18,142 kPa) (See figure).
- The injection pipe is laid in such a way that the overall length is minimized to enhance performance.

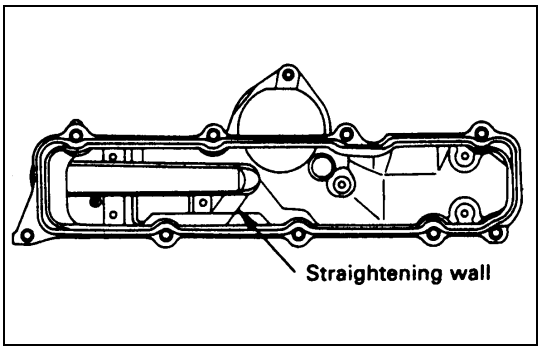

6A3-7-2.tif

INTAKE AND EXHAUST SYSTEMS

- The resin-made intake manifold is of the cover type having an inner cover made of rubber and steel. This design effectively reduces radiant sound and transmitted sound.
- The intake manifold has a straightening vane inside to stabilize swirl and improve performance. It also contains a built-in Positive Crankcase Ventilation (PCV) valve to minimize the overall size(See figure).
- The exhaust manifold is mode of cast iron and heatresisting alloys. Ports are shaped carefully to minimize exhaust resistance.

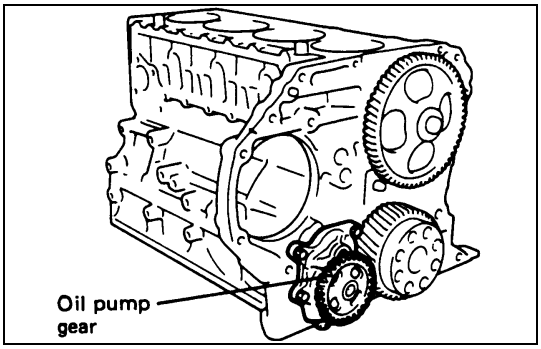

6A3-8-1.tif

LUBRICATION SYSTEM

- The oil pump is driven by the crank gear directly to increase durability while maintaining sufficient delivery. The pump body is partially integrated with the cylinder block to reduce the overall size and weight (See figure)
- The oil filter is of the cartridge type integrating the fullflow filter and bypass filter as a single unit. This presents several advangates such as an extended interval between oil exchanges and greater ease of maintenance resulting in cost reduction. The bypass valve is fitted to the body itself to avoid flow of foreign matter due to bypassing of oil thereby maintaining sufficient reliability.
- The oil cooler is of a large-capacity, water-cooled and multiple-partition type built into the side of the cylinder block. This design maintains necessary stability in oil temperature. It also has a bypass valve to minimize delay of the oil gallery pressure build-up for cold starting.

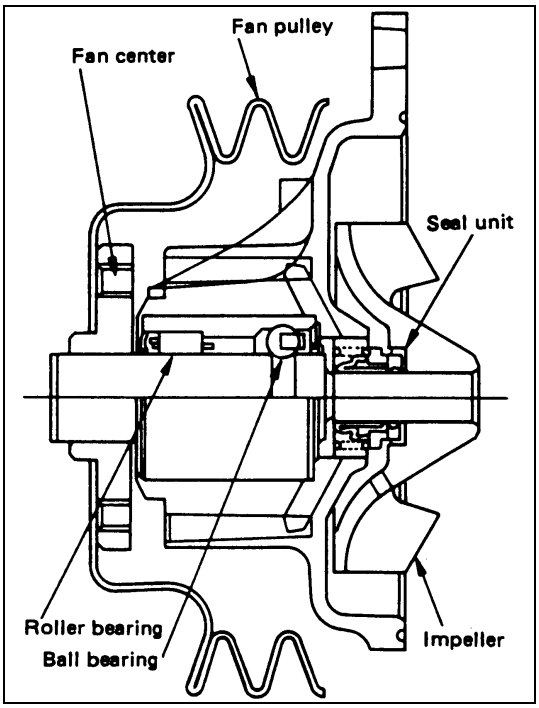

6A3-8-2.tif

COOLING SYSTEM

- The water pump is driven by a V-belt and the pump body is made of diecast aluminum. Part of the swirlchamber is built into the engine front cover to reduce the overall size and weight.

  A sintered carbon type seal unit is chosen to secure reliability. The shaft bearing combines roller bearing and ball bearing to maintain necessary durability. The outlet for draining is located behind the pulley to prevent dust from entering the system as much as possible.(See figure)
- The cooling fan operation is regulated by a temperature-sensitive clutch to enhance fuel efficiency while reducing noise.

IMPORTANT OPERATIONS

1. **Axial Type Oil Seal**
   - As crankshaft front and rear oil seals are both axial type, attention must be paid to the following: when replacing, replace oil seal and slinger as a set.
   - Be sure to use the special tool correctly since oil seal and slinger must be set accurately in their longitudinal direction.
2. **Valve Cap**
   - As intake and exhaust valves have caps, take sufficient care not to let them fall into the gear case or oil return hole during disassembly or reassembly.
3. **Application of Liquid Gasket**
   - Oil pan, crankcase, oil cooler, retainer front, and water pump are not sealed with sheet gasket but with liquid gasket only.
   - Prior to application, be sure to remove old hardened liquid gasket or oil from those surfaces to which new gasket will be applied. Further, if the old gasket can hardly be removed, mask such surfaces with gasket remover (Three Bond PANDO-391D; ISUZU Genuine Parts No.1-8844-0542-0) or equivalent in accordance with the instructions manual.
   - Liquid gasket should be applied evenly so that no breaks and omissions may be made. Further, where O-ring is used should not be exposed to liquid gasket.
4. **Plastic-Region Angular Nut & Bolt Tightening Method**
   - Clamping bolts of connecting rod and cylinder head (M14 only) are tightened by plastic region angular nut and bolt tightening method. This method is applied with bolt threads and setting faces coated with molybdenum disulfide grease.

ENGINE MOUNT (RH,LH)

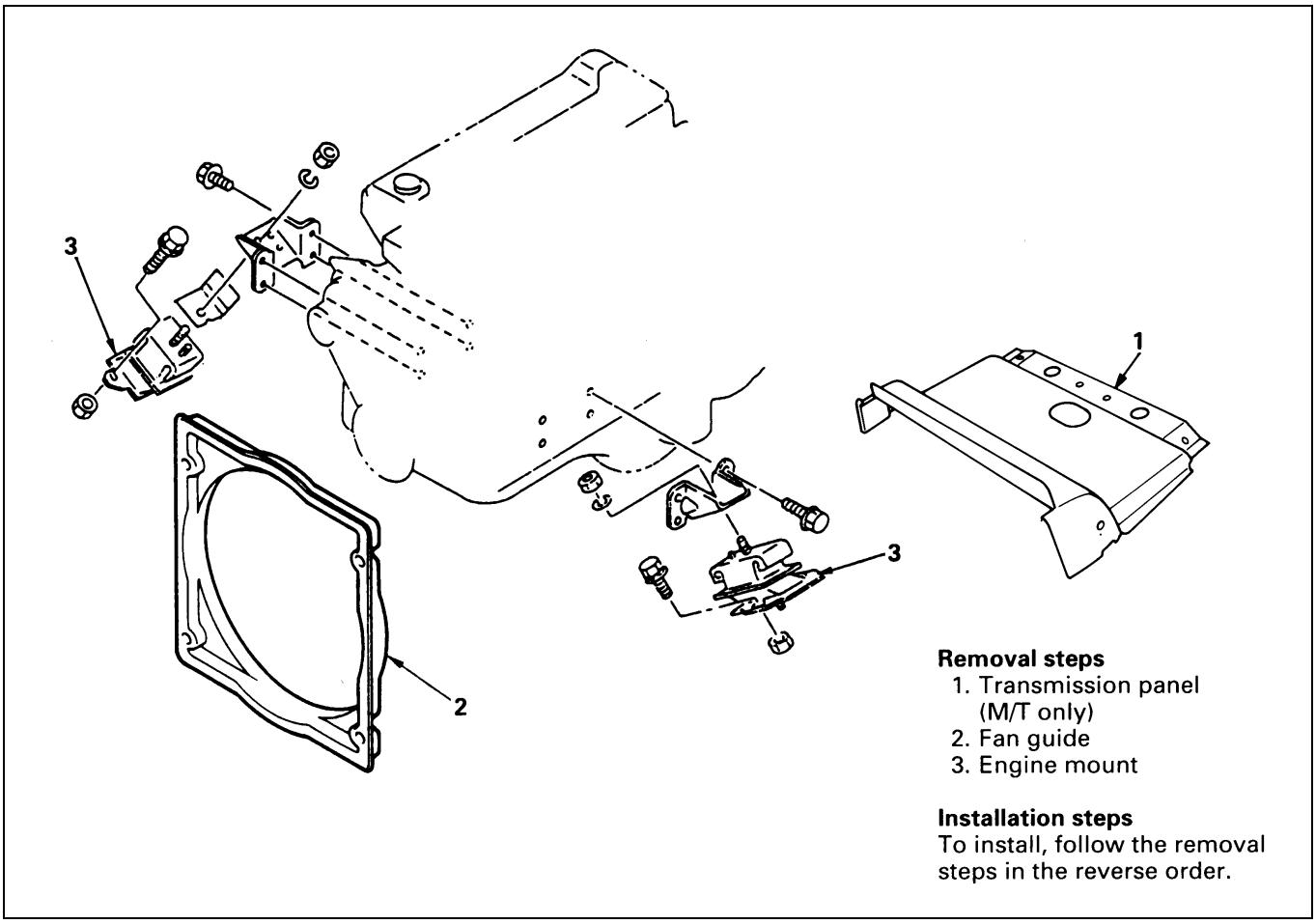

6A3-10-1.tif

REMOVAL

Preparation

- Disconnect battery ground cable.
- Tilt the cab.

1. **Transmission Panel (M/T only)**
2. **Fan Guide**

   Remove the fan guide and hang it on the fan side.

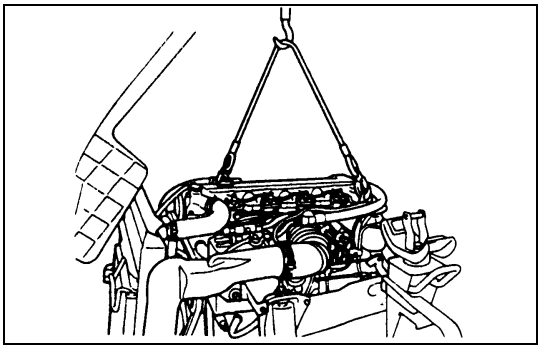

6A3-11-1.tif

3. Engine Mount

1) Hang the engine by the hoist before dismounting the engine mount.
2) Remove the nuts that fix the engine foot and the engine mount.
3) Remove the fixing bolts on the chassis frame side of the engine mount.
4) Hoist the engine assembly a little, and dismount the engine mount.

INSTALLATION

3. Engine Mount

Tighten the fixing bolts to the specified torque.

Chassis Frame Side Bolt Torque	N•m (kg•m/lb•ft)
48 (4.9/35)	

Engine Foot Side Nut Torque	N•m (kg•m/lb•ft)
82 (8.4/61)	

2. Fan Guide

1. Transmission Panel (M/T only)

1) Connect the negative battery cable.
2) Lower the cab
3) Start the engine, and check for any abnormal conditions with the engine mount.

CYLINDER HEAD COVER

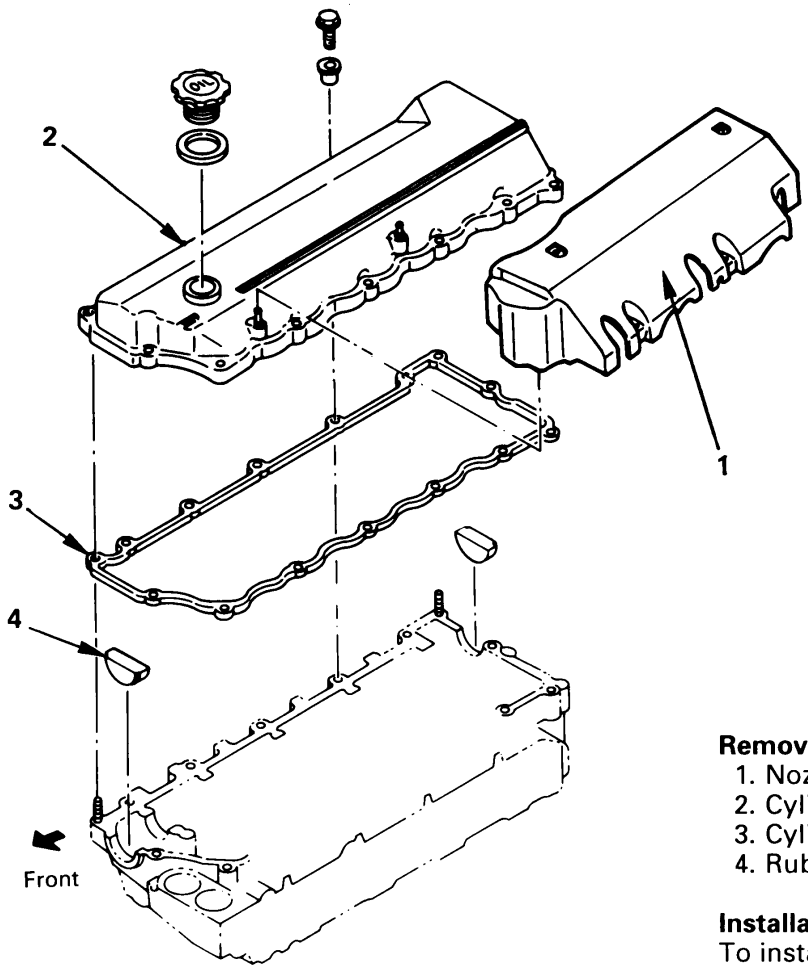

Removal steps
1. Nozzle cover
2. Cylinder head cover
3. Cylinder head cover gasket
4. Rubber plug

Installation steps
To install, follow the removal steps in the reverse order.

6A3-12-1.tif

REMOVAL

Preparation
- Disconnect battery ground cable.
- Tilt the cab.

1. **Nozzle Cover**
2. **Cylinder Head Cover**
3. **Cylinder Head Cover Gasket**
4. **Rubber Plug**

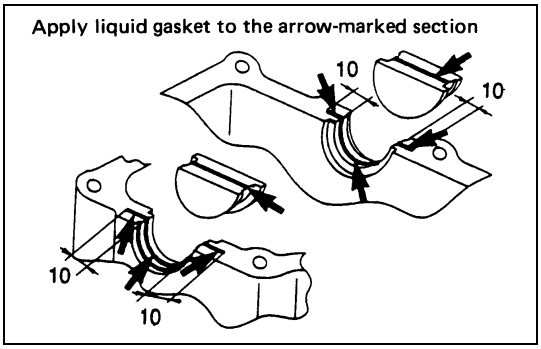

6A3-13-1.tif

INSTALLATION

4. Rubber Plug

1) Apply a 3mm-4mm bead of the recommended liquid gasket (Three Bond 1207B) or its equivalent to the cylinder head front and rear plug arch.
2) Install the rubber plugs to the cylinder head upper faces.
3) Apply a 3mm-4mm bead of the recommended liquid gasket (Three Bond 1207B) or its equivalent to the rubber plugs and cylinder head upper faces. Refer to the illustration.

Install the cylinder head cover within 7 minutes after application of liquid gasket.

3. Cylinder Head Cover Gasket

Install the gasket to the cylinder head cover.

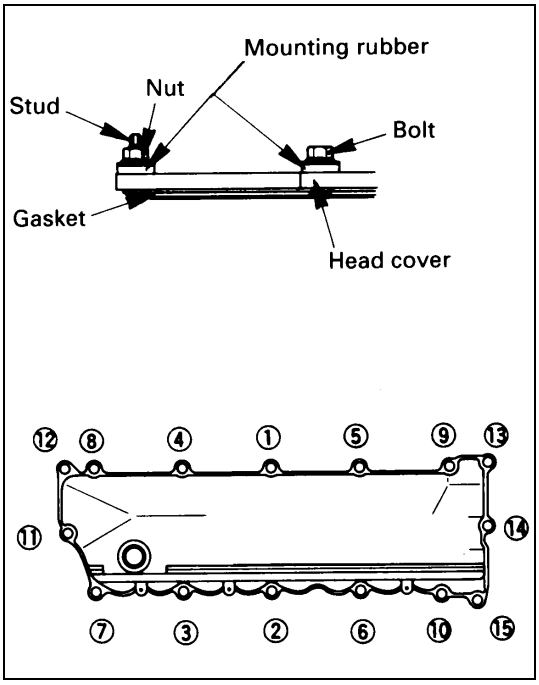

6A3-13-2.tif

2. Cylinder Head Cover

1) Install the cylinder head cover.
2) Tighten the cylinder head cover nuts and bolts to the specified torque in the numerical order shown in the illustration.

Cylinder Head Cover Nut and Bolt Torque	N•m (kg•m/lb•ft)
18 (1.8/13)	

1. Nozzle Cover

- Connect the negative battery cable.
- Lower the cab.
- Start engine and check for oil leakage carefully.

INLET COVER / INLET CASE

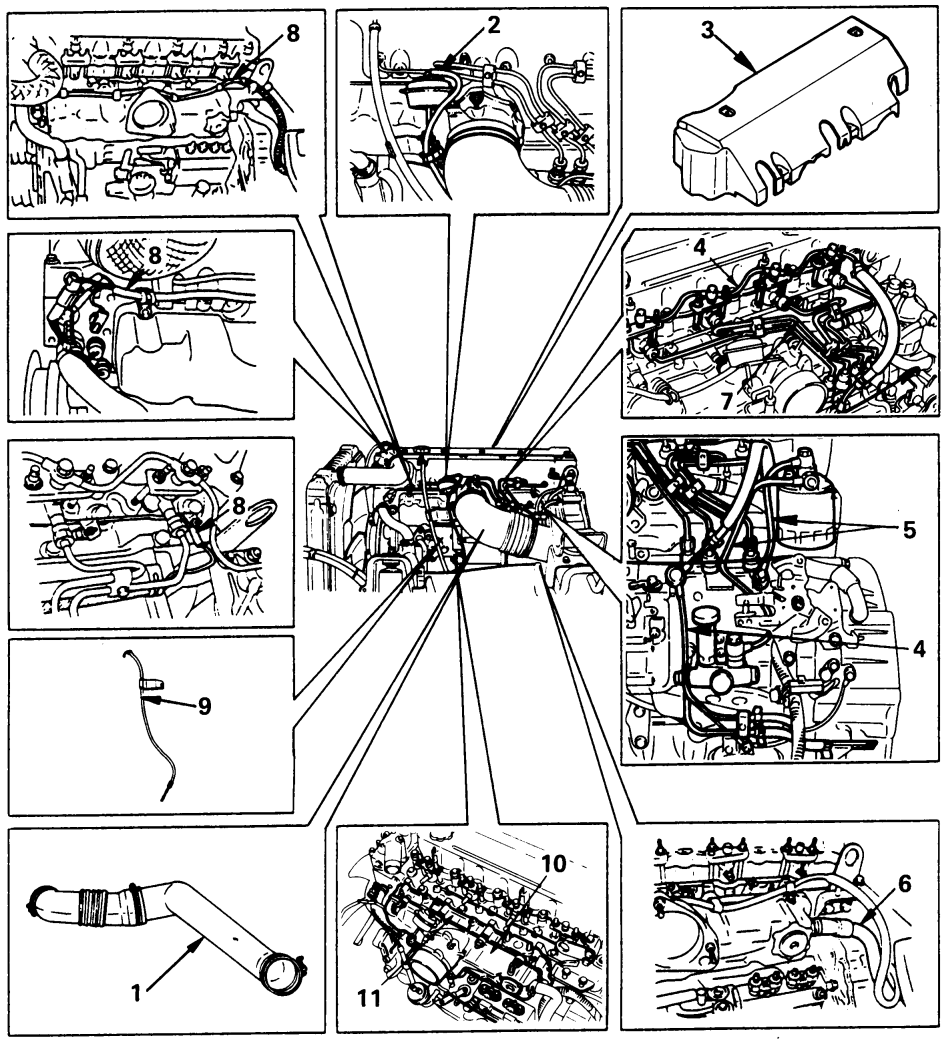

for 4HF1

Removal steps
1. Intake air duct
2. Vacuum hose
3. Nozzle cover
4. Leak off pipe
5. Fuel pipe
6. PCV hose
7. Injection pipe
8. Engine harness
9. Oil level guide tube
10. Inlet cover
11. Inlet case

Installation steps
To install, follow the removal steps in the reverse order.

6A3-14-1.tif

REMOVAL

Preparation

- Disconnect battery ground cable.
- Tilt the cab.

1. Intake Air Duct

1) Remove the clips at the connections with the inlet cover and with the air cleaner.
2) Remove the intake air duct with the connector hose attached.

2. Vacuum Hose

3. Nozzle Cover

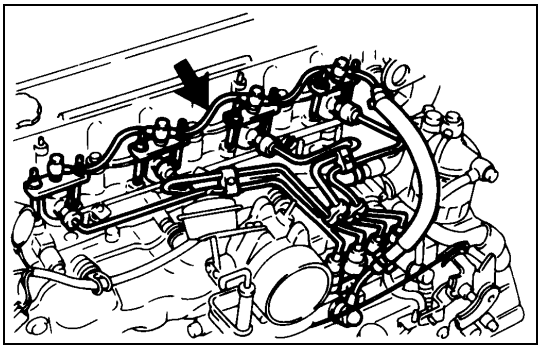

6A3-15-1.tif

4. Leak off Pipe

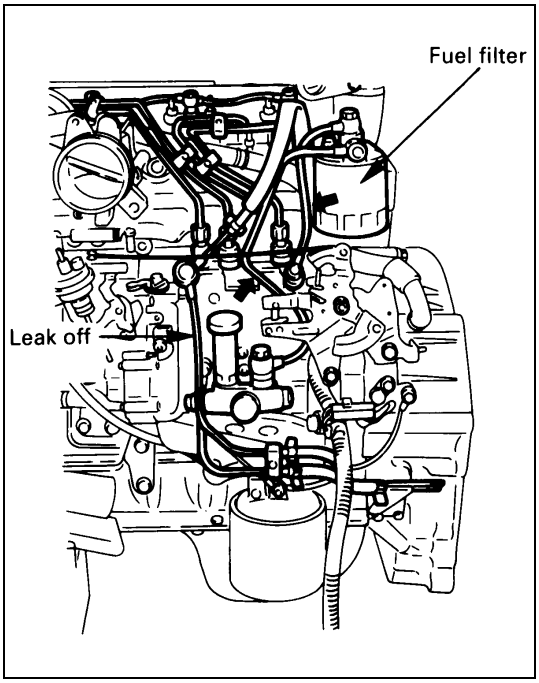

6A3-15-2.tif

5. Fuel Pipe

Do not apply excessive force to the fuel pipes.

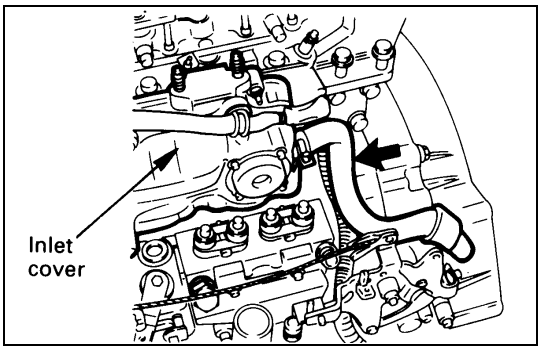

6A3-15-3.tif

6. Positive Crankcase Ventilation (PCV) Hose

Disconnect the PCV hose from inlet cover.

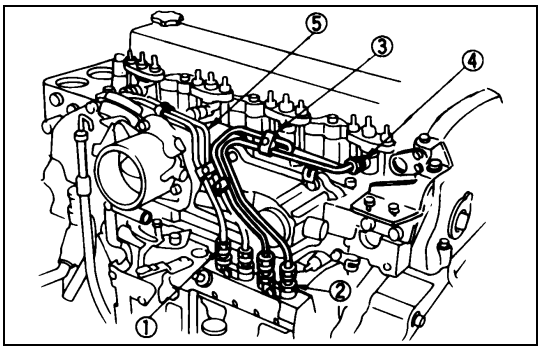

6A3-15-4.tif

7. Fuel Injection

1) Loosen the injection pipe sleeve nuts ①.
2) Do not apply excessive force to the injection pipes ⑤.
3) Loosen the injection pipes clips ③.
4) Remove the injection pipe assembly.
   Plug the delivery valve holder ② ports and nozzle holder ④ ports with caps to prevent the entry of foreign material.

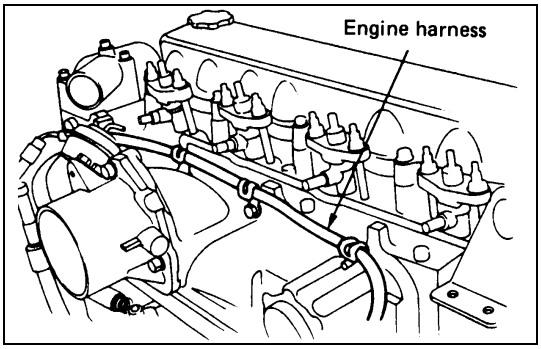

6A3-16-1.tif

8. Engine Harness

Disconnect thermometer unit, thermo switch, tachometer sensor and glow plug harness connectors and separate harness from clips.

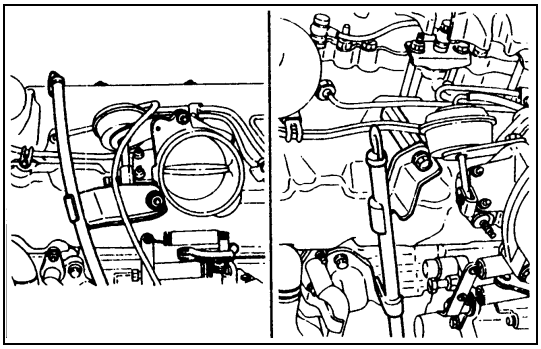

6A3-16-2.tif

9. Oil Level Gauge Guide Tube

Remove the guide tube fixing bolt and pull out the guide tube.

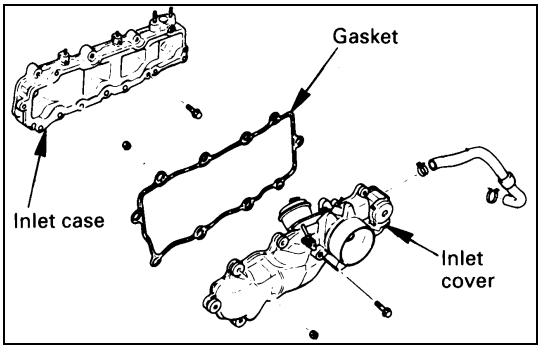

6A3-16-3.tif

10. Inlet Cover

11. Inlet Case

Remove the inlet case while removing the liquid gasket.

INSTALLATION

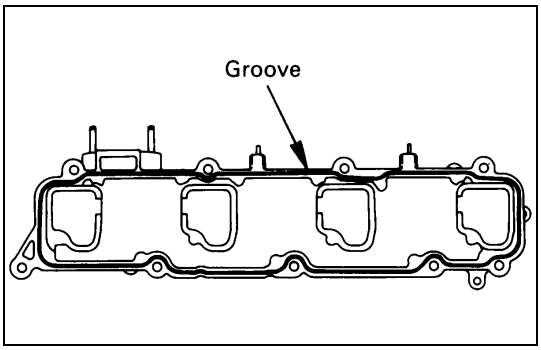

6A3-16-4.tif

11. Inlet Case

1) Apply 2 mm-3 mm bead of the recommended liquid gasket (Three Bond 1207C) or its equivalent on the groove of the inlet case fitting surfaces shown in the illustration.
- Clean the inlet case fitting surface of the cylinder head.

2) Install the inlet case to the cylinder head.
- Install the inlet case within 7 minutes after application of liquid gasket.

3) Tighten the inlet case to the specified torque.

Inlet Case Nuts and Bolts Torque	N•m (kg•m/lb•ft)
19 (1.9/14)	

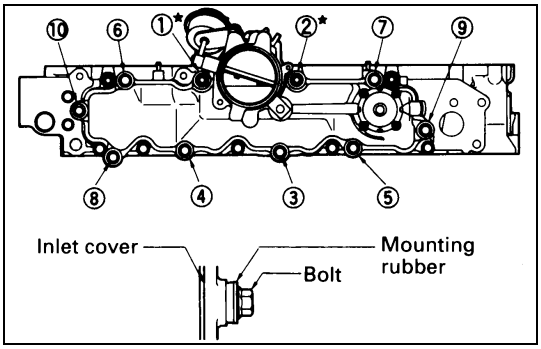

6A3-17-1.tif

10. Inlet Cover

1) Attach harness clips (①, ⑥ and ⑦) and tighten the inlet cover bolts and nuts to the specified torque in the numerical order shown in the illustration.
2) ★ marks are located on the nut positions.

Inlet Cover Bolt and Nut Torque	N•m (kg•m/lb•ft)
13 (1.3/9)	

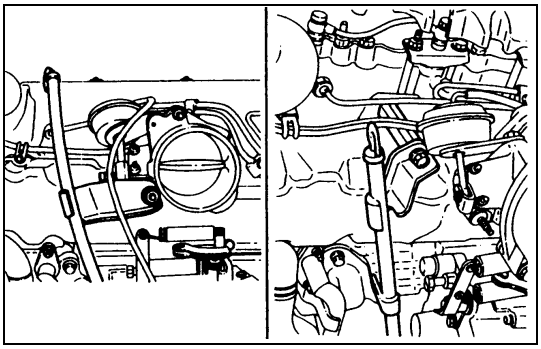

6A3-17-2.tif

9. Oil Level Gauge Guide Tube

1) Install the O-rings to the guide tube lower portion and insert the guide tube completely to the cylinder body.
2) Tighten the guide tube bolt to the specified torque.

Guide Tube Bolt Torque	N•m (kg•m/lb•ft)
13 (1.3/9.4)	

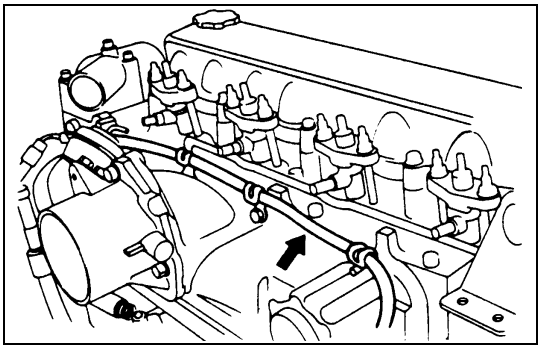

6A3-17-3.tif

8. Engine Harness

Connect thermometer unit, thermo switch, tachometer sensor and glow plug harness connector and fasten the engine harness with clips.

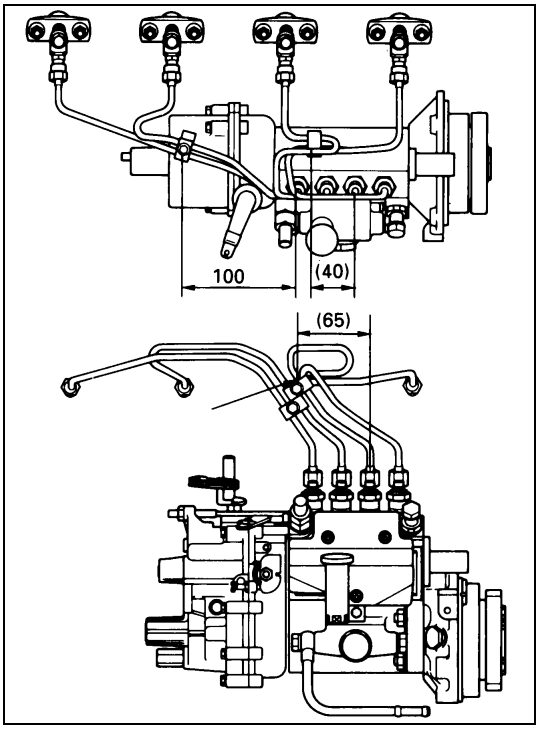

6A3-17-4.tif

7. Fuel Injection Pipe Assembly

1) Install the injection pipe assembly and temporarily tighten the injection pipe sleeve nuts.
2) Set the clips in the prescribed position shown in the illustration.

CAUTION:

Make absolutely sure that the clip is correctly positioned.

An improperly positioned clip will result in injection pipe breakage and fuel pulsing noise.

Clip Screw Torque	N•m (kg•m/lb•in)
3 (0.3/26)	

3) Tighten the injection pipe sleeve nuts to the specified torque.

Injection Pipe Sleeve Nut Torque	N•m (kg•m/lb•ft)
29 (3/22)	

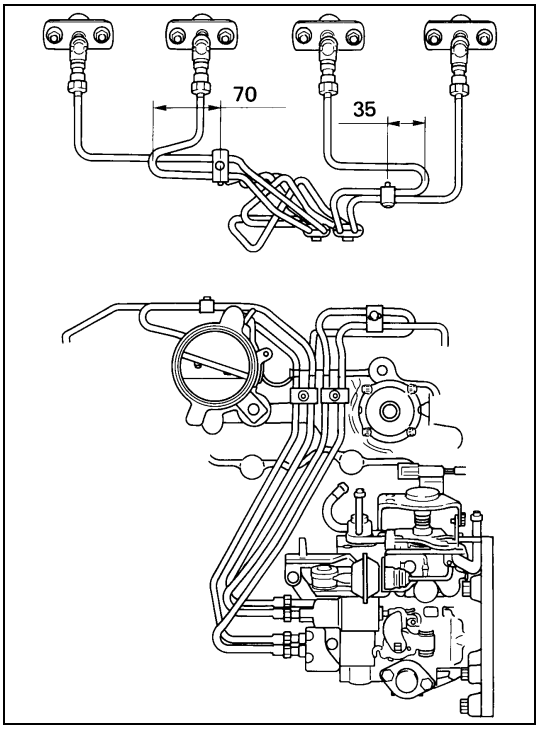

6A3-18-1.tif

Fuel Injection Pipe Assembly (4HF1-2 model only)

1) Install the injection pipe assembly and temporarily tighten the injection pipe sleeve nuts.
2) Set the clips in the prescribed position shown in the illustration.

CAUTION:

Make absolutely sure that the clip is correctly positioned.

An improperly positioned clip will result in injection pipe breakage and fuel pulsing noise.

Clip Screw Torque	N•m (kg•m/lb•in)
3 (0.3/26)	

3) Tighten the injection pipe sleeve nuts to the specified torque.

Injection Pipe Sleeve Nut Torque	N•m (kg•m/lb•ft)
29 (3/22)	

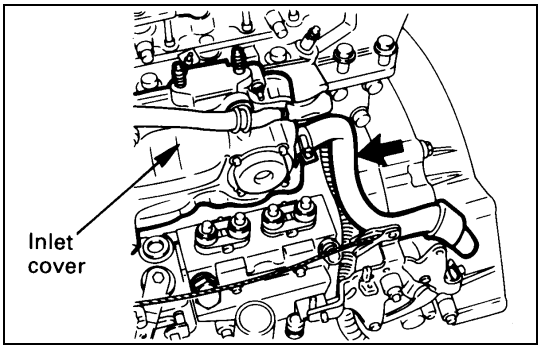

6A3-18-2.tif

6. Positive Crankcase Ventilation (PCV) Hose

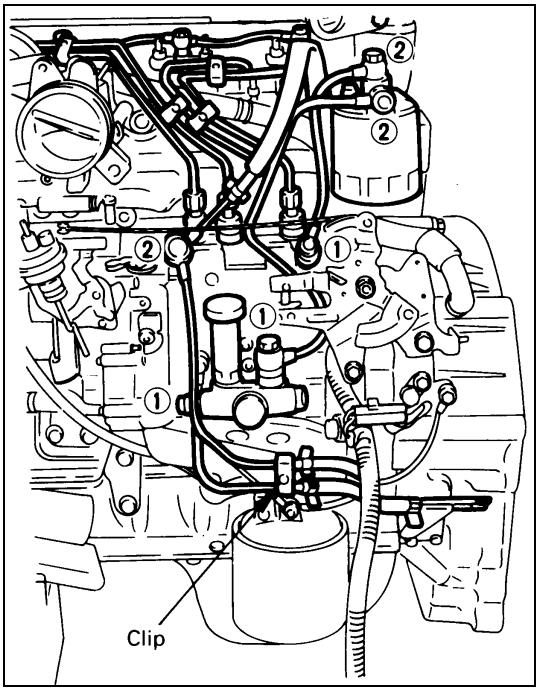

6A3-18-3.tif

5. Fuel Pipe

Do not apply excessive force to the fuel pipe.

Fuel Pipe Joint Bolt ① Torque	N•m (kg•m/lb•ft)
41 (4.2/30)	

Fuel Pipe Joint Bolt ② Torque	N•m (kg•m/lb•ft)
23 (2.3/17)	

Clip Screw Torque	N•m (kg•m/lb•in)
4 (0.4/35)	

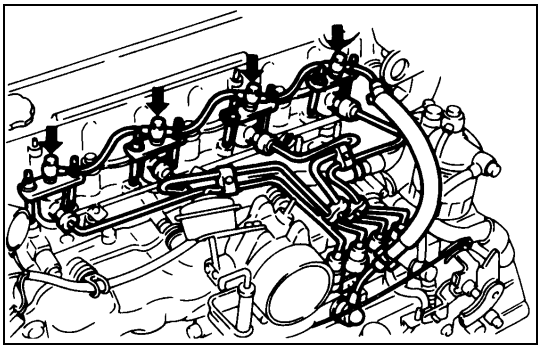

6A3-19-1.tif

4. **Leak Off Pipe**

Leak-Off Pipe Joint Bolt Torque	N•m (kg•m/lb•in)
13 (1.3/113)	

3. **Nozzle Cover**
2. **Vacuum Hose**
1. **Intake Air Duct**
   - Connect the negative battery cable.
   - Lower the cab.
   - Start engine and check for fuel leakage carefully.

EXHAUST MANIFOLD

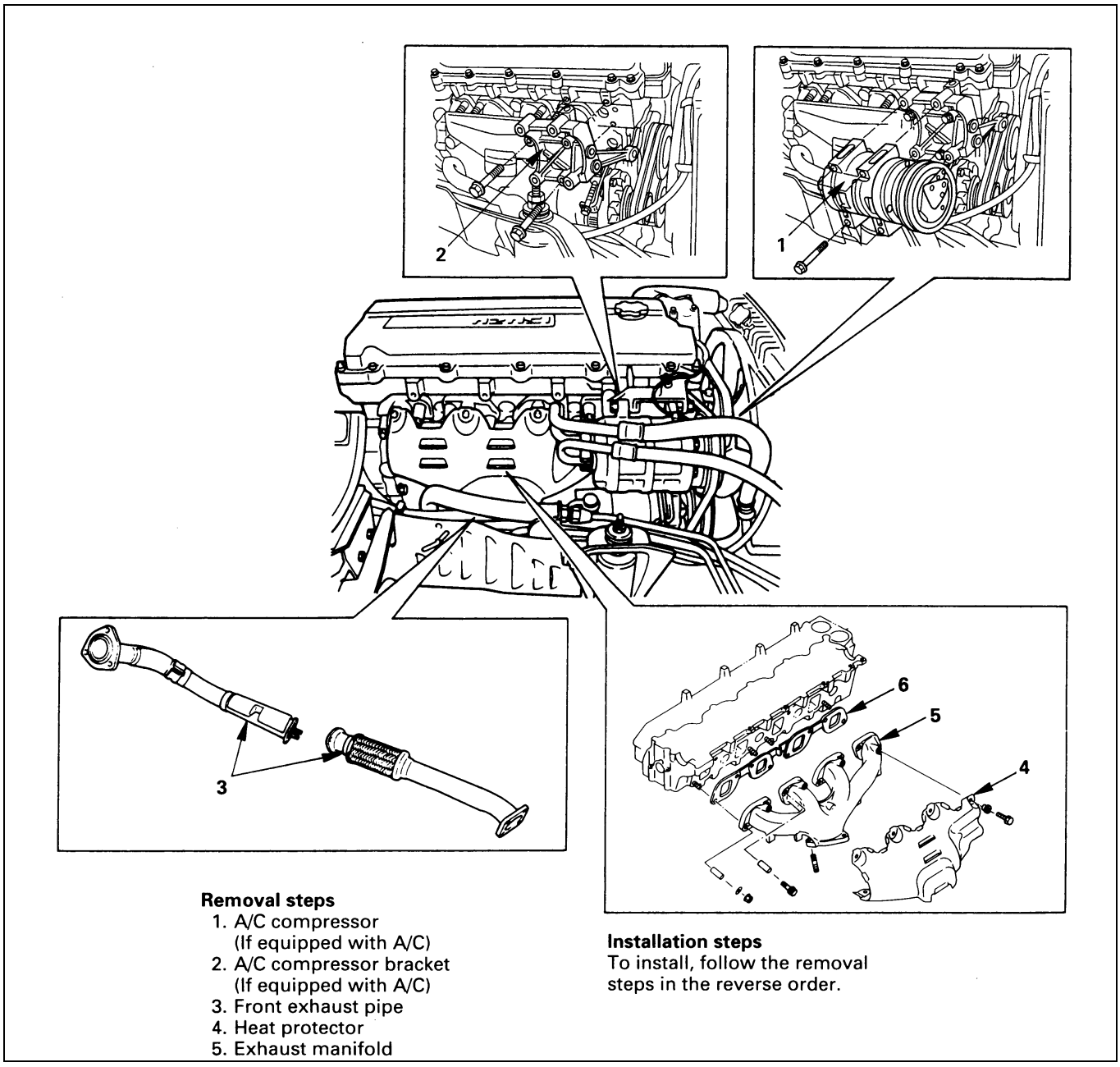

Removal steps
1. A/C compressor
   (If equipped with A/C)
2. A/C compressor bracket
   (If equipped with A/C)
3. Front exhaust pipe
4. Heat protector
5. Exhaust manifold

Installation steps
To install, follow the removal steps in the reverse order.

6A3-20-1.tif

REMOVAL

Preparation

- Disconnect battery ground cable.
- Tilt the cab.

1. Air Conditioning (A/C) Compressor (If equipped with A/C)

1) Disconnect magnetic clutch harness connector.
2) Dismount the compressor together with the hoses from the A/C compressor bracket, and fasten it to the appropriate location with a wire.

2. **A/C Compressor Bracket (If equipped with A/C)**
3. **Front Exhaust Pipe**
4. **Heat Protector**
5. **Exhaust Manifold**
6. **Exhaust Gasket**

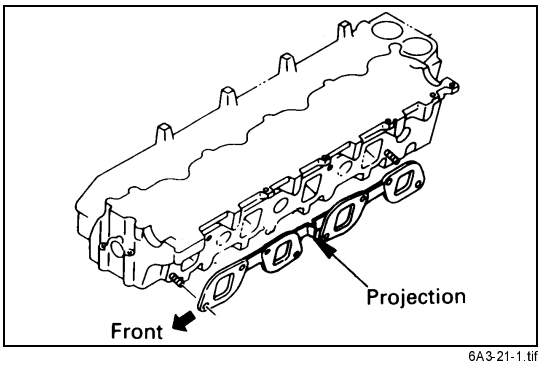

6A3-21-1.tif

INSTALLATION

6. **Exhaust Gasket**

Insert the gasket into the stud provided to the cylinder head (with the projection of the gasket on this side).

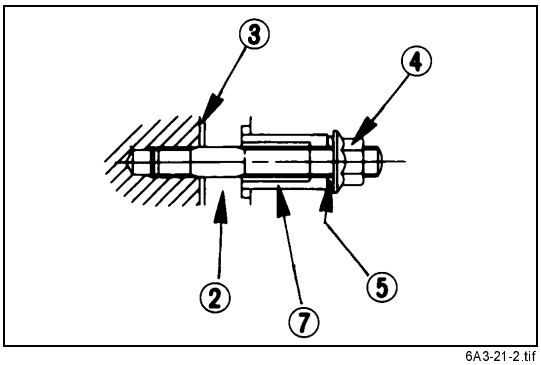

6A3-21-2.tif

5. **Exhaust Manifold**

1) Install exhaust manifold gaskets ③, exhaust manifold ②, distance pieces ⑦, dish washers ⑤ and nuts ④ to the stud bolts shown in the illustration.

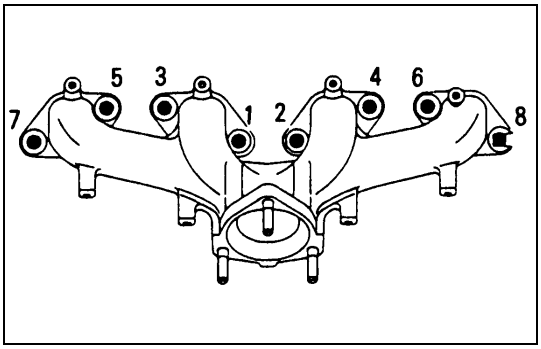

6A3-21-3.tif

2) Tighten the nuts to the specified torque in the numerical order shown in the illustration.

Exhaust Manifold Nut Torque	N•m(kg•m/lb•ft)
34(3.5/25)	

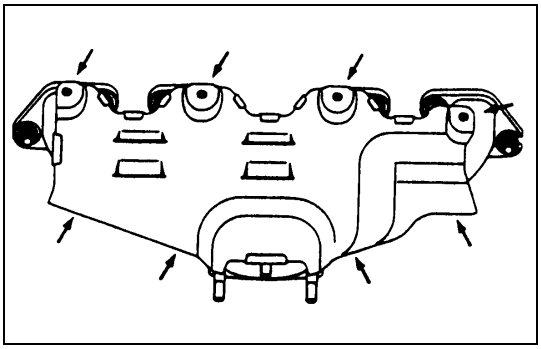
6A3-21-4.tif

4. **Heat Protector**

Heat Protector Bolt Torque	N•m (kg•m/lb•ft)
10 (1.0/7)	

3. **Front Exhaust Pipe**

Exhaust Manifold Side	N•m (kg•m/lb•ft)
67 (6.8/49)	

Exhaust Brake Side	N•m (kg•m/lb•ft)
17 (1.7/12)	

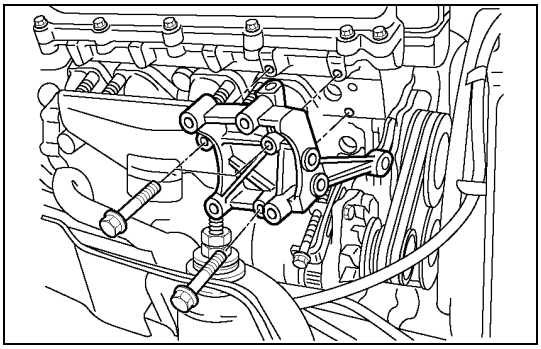

901LV057.tif

2. Air Conditioning (A/C) Compressor Bracket (If equipped with A/C)

Tighten fixing bolts to the specified torque.

A/C Compressor Bracket Bolt Torque	N•m (kg•m/lb•ft)
48 (4.9/35)	

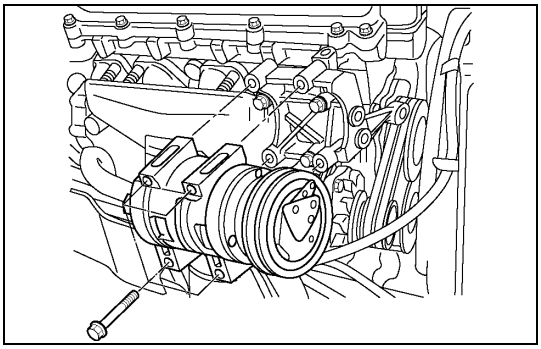

901LV058.tif

1. A/C Compressor (If equipped with A/C)

1) Tighten fixing bolts to the specified torque.

A/C Compressor Bolt Torque	N•m (kg•m/lb•ft)
48 (4.9/35)	

Note:

When tightening the compressor fixing bolts, tighten first the 2 bolts on the rear side, and then the remaining 2 on the front.

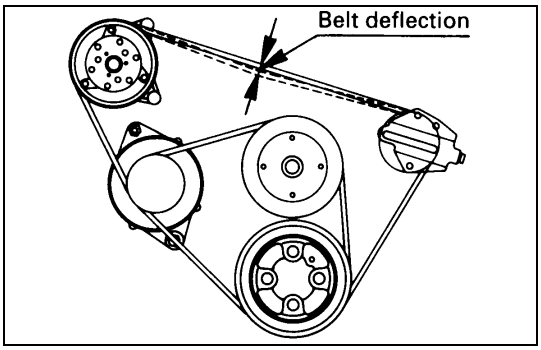

6A3-22-3.tif

2) Install drive belt adjust belt tension by adjusting bolt and tighten locking nut to the specified torque.
3) Depress the drive belt mid-portion with a 98N (10kg/22lb) force.

Drive Belt Deflection	mm (in)
16 - 20 (0.63 - 0.79) ... New belt 18 - 22 (0.71 - 0.87) .. Reuse belt	

Locking Nut Torque	N•m (kg•m/lb•ft)
27 (2.8/20)	

- Connect the negative battery cable.
- Lower the cab.
- Start engine and check for gas leakage carefully.

TIMING GEAR REPLACEMENT

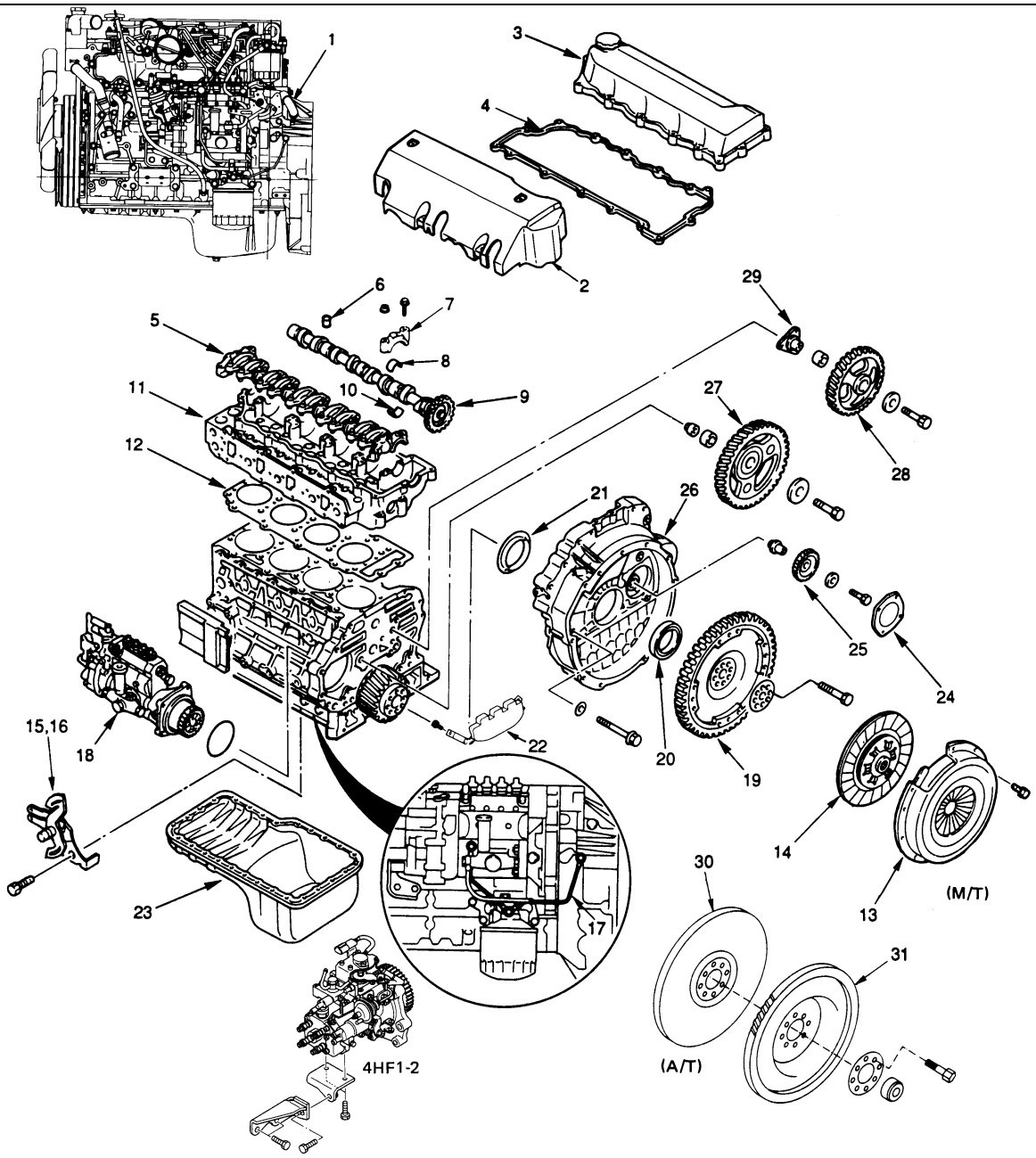

Removal steps

1. Engine assembly
2. Nozzle cover
3. Cylinder head cover
4. Head cover gasket
5. Rocker arm shaft assembly
6. Valve cap
7. Camshaft bearing cap
8. Camshaft bearing upper
9. Camshaft assembly
10. Camshaft bearing lower
11. Cylinder head assembly
12. Cylinder head gasket
13. Clutch pressure plate assembly
14. Driven plate
15. Engine control wire
16. Engine control lever assembly
17. Oil pipe
18. Injection pump assembly
19. Flywheel (M/T)
20. Rear oil seal
21. Slinger
22. Spacer rubber (NKR model only)
23. Oil pan
24. Power steering pump idle gear cover
25. Power steering pump idle gear
26. Flywheel housing
27. Idle gear A
28. Idle gear B
29. Idle gear B shaft
30. Flywheel (A/T)
31. Flexible plate (A/T)

Installation steps

To install, follow the removal steps in the reverse order.

6A3-23-1.tif

REMOVAL

Preparation

- Disconnect battery ground cable.
- Tilt the cab.
- Drain coolant and engine oil.

1. **Engine Assembly**

   Above works refer to “ENGINE ASSEMBLY” section in this manual.
2. **Nozzle Cover**
3. **Cylinder Head Cover**
4. **Head Cover Gasket**
5. **Rocker Arm Shaft Assembly**
   1) Loosen the rocker arm shaft bracket nuts and bolts in numerical order a little at a time and remove the rocker arm shaft assembly with the camshaft brackets.
   2) Leave the Ⓐ indicated bolt unremoved on this occasion, since it is the rocker arm fixing bolt.

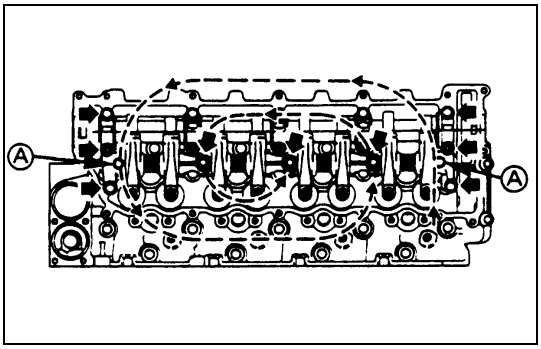

6A3-24-1.tif

CAUTION:

Failure to loosen the rocker arm shaft bracket nuts and bolts in numerical order a little at a time will adversely affect the rocker arm shaft.

6. **Valve Cap**

CAUTION:

Take sufficient care not to let valve caps fall into the gear case or oil return hole.

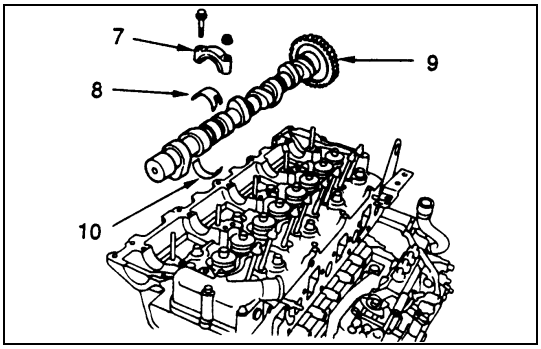

6A3-24-2.tif

7. **Camshaft Bearing Cap**
8. **Camshaft Bearing Upper**
9. **Camshaft Assembly**
10. **Camshaft Bearing Lower**

    If the camshaft bearings are to be reinstalled, mark their fitting positions by tagging each bearing with the cylinder number from which it was removed.
11. **Cylinder Head Assembly**

    Above works refer to “CYLINDER HEAD” section in this manual.

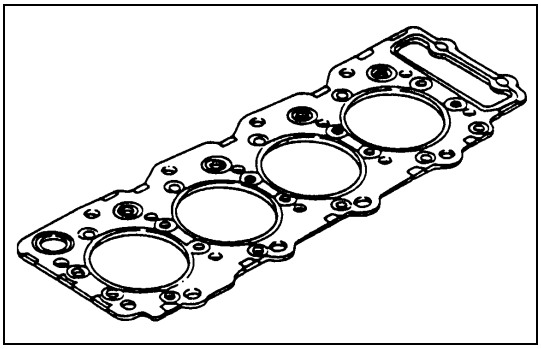

6A3-25-1.tif

12. Cylinder Head Gasket

CAUTION:

Do not reuse the cylinder head gasket.

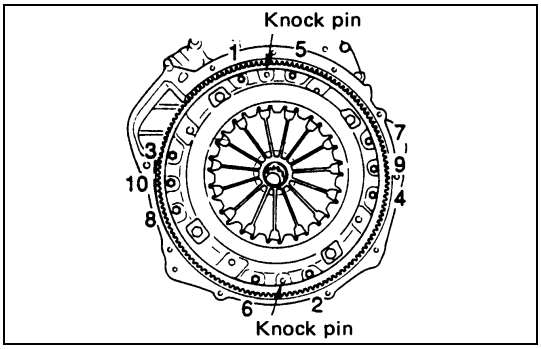

6A3-25-2.tif

13. Clutch Pressure Plate Assembly

1) Insert the clutch pilot aligner to the clutch assembly.
   Clutch Pilot Aligner: 5-8840-2240-0
2) Loosen the pressure plate bolts in numerical order a little at a time as shown in the illustration.
3) Remove the pressure plate assembly.

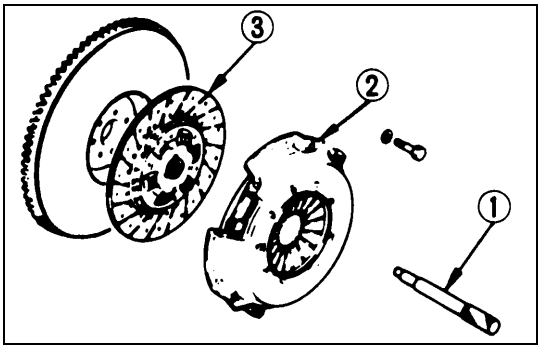

6A3-25-3.tif

14. Driven Plate

Remove the driven plate with the clutch pilot aligner.

① Clutch pilot aligner

② Clutch pressure plate assembly

③ Driven plate

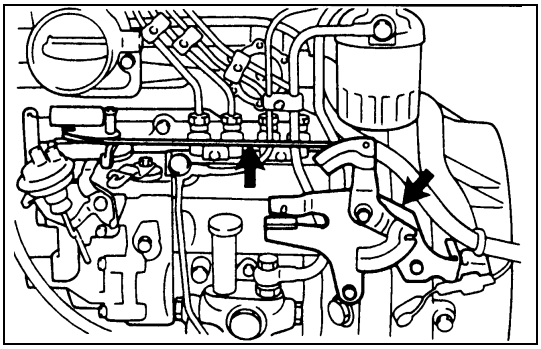

6A3-25-4.tif

15. Engine Control Wire

16. Engine Control Lever Assembly

17. Oil Pipe

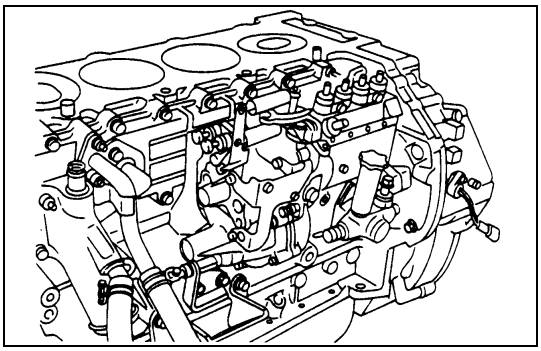

6A3-25-5.tif

18. Injection Pump Assembly

1) Remove the injection pump bracket bolts and the injection pump rear bracket bolts.
2) Then remove the injection pump assembly.

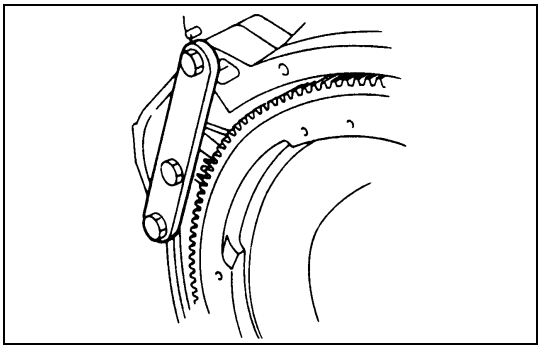

6A3-26-1.tif

19. Flywheel Assembly

1) Use the crankshaft stopper to prevent the crankshaft from turning.
   Crankshaft Stopper: 5-8840-2230-0
2) Loosen the flywheel bolts in numerical order a little at a time as shown in the illustration.
3) Remove the flywheel stopper and the flywheel assembly.

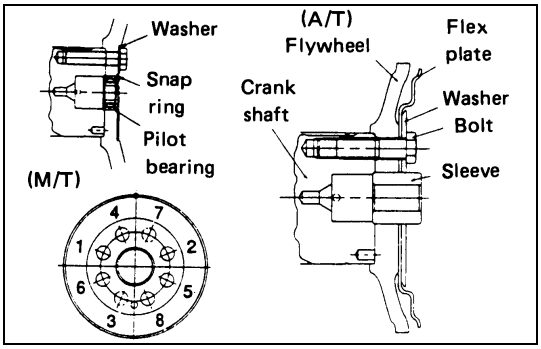

6A3-26-2.tif

For the A/T vehicle, after loosening the flywheel fixing bolt, remove the washer, the flexible plate, the flywheel and the sleeve in this order.

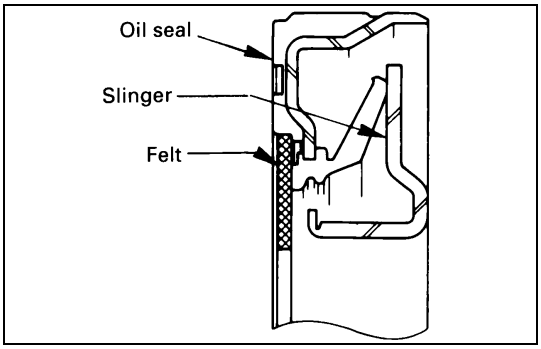

6A3-26-3.tif

20. Crankshaft Rear Oil Seal

CAUTION:

Be careful not to damage the crankshaft oil seal contact surface during the removal procedure.

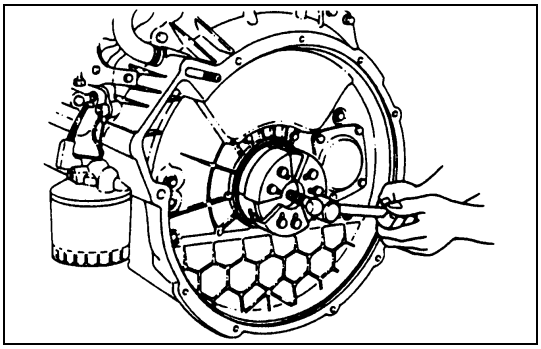

6A3-26-4.tif

21. Crankshaft Rear Slinger

Use the slinger puller to pull out the slinger.
Slinger Puller: 5-8840-2360-0

22. Spacer Rubber (NKR model only)

(For the 4WD model vehicle, remove the stiffener before removing the spacer rubber.)

23. Oil Pan

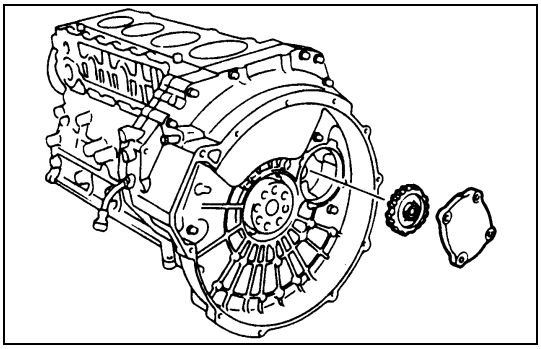

6A3-27-1.tif

24. Power Steering Pump Idle Gear Cover
25. Power Steering Pump Idle Gear

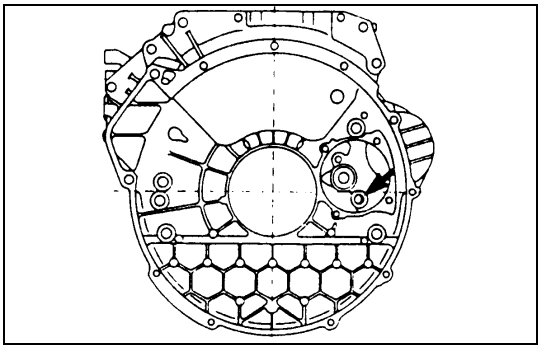

6A3-27-2.tif

26. Flywheel Housing

NOTE:

Be careful not to fail to remove the bolts shown in the illustration.

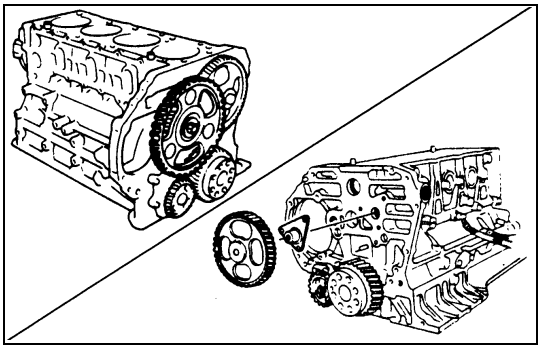

6A3-27-3.tif

27. Idle Gear A
28. Idle Gear B
29. Idle Gear B shaft

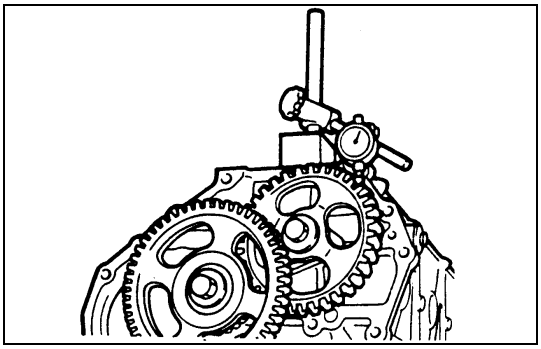

6A3-27-4.tif

INSPECTION

Idle Gear Backlash Measurement

1) Set a dial indicator to the timing gear to be measured. Hold both the gear to be checked and the adjoining gear stationary.
2) Move the gear to be checked right and left as far as possible. Take the dial indicator reading.

Timing Gear Backlash Gear to Gear mm (in)

Standard	Limit
0.10 ~ 0.17 (0.0039 ~ 0.0067)	0.30 (0.012)

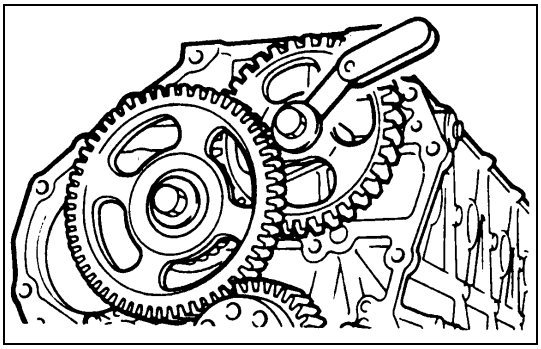

6A3-28-1.tif

Idler Gear End Play Measurement

Insert a feeler gauge between the idler gear and the thrust collar to measure the gap and determine the idler gear end play.

If the measured value exceeds the specified limit, the thrust collar must be replaced.

Idler Gear End Play — mm (in)

Standard	Limit
0.058 - 0.115 (0.002 - 0.005)	0.2 (0.008)

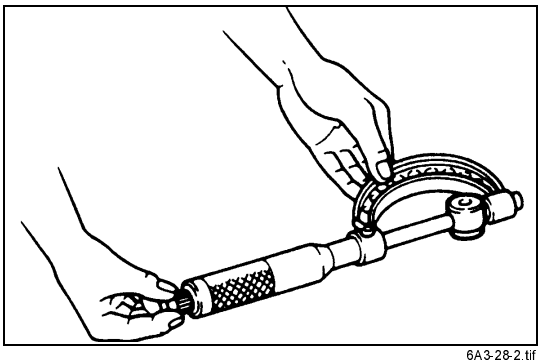

6A3-28-2.tif

Idler Gear Shaft Outside Diameter

Use a micrometer to measure the idler gear shaft outside diameter.

If the measured value is less than the specified limit, the idler gear must be replaced.

Idler Gear Shaft Outside Diameter — mm (in)

Standard	Limit
29.959 - 29.980 (1.1795 - 1.1803)	29.80 (1.1732)

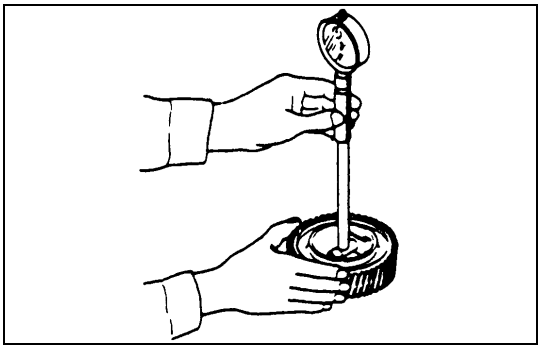

6A3-28-3.tif

Idler Gear Inside Diameter

Use an inside dial indicator or an inside micrometer to measure the idler gear inside diameter.

Idler Gear Inside diameter — mm (in)

Standard	Limit
30.000 - 30.021 (1.1811 - 1.1819)	30.100 (1.1850)

If the clearance between the idler gear shaft outside diameter and the idler gear inside diameter exceeds the limit, the idler gear must be replaced.

Idler Gear Shaft and Idler Gear clearance — mm (in)

Standard	Limit
0.020 - 0.062 (0.0008 - 0.0024)	0.200 (0.0079)

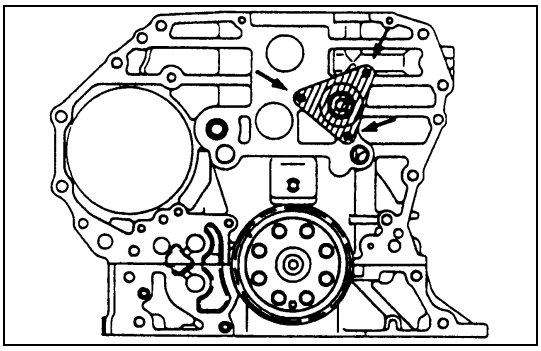

6A3-28-4.tif

INSTALLATION

29. Idler Gear B Shaft

Idle Gear B Shaft Bolt Torque — N•m (kg•m/lb•ft)

31 (3.2/23)

Apply the engine oil to the idle gear shaft after installation.

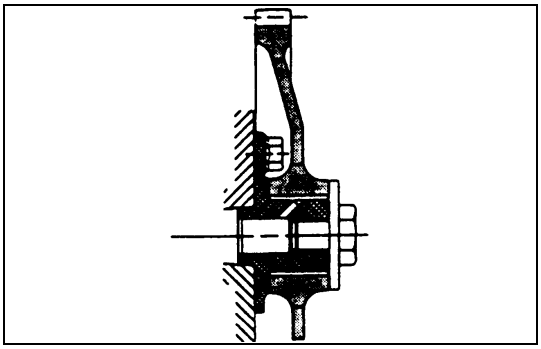

6A3-29-1.tif

28. Idle Gear B

The face of the idle gear B with longer boss should be positioned toward the rear side shown in the illustration.

Idle Gear B Bolt Torque	N•m (kg•m/lb•ft)
110 (11.2/81)	

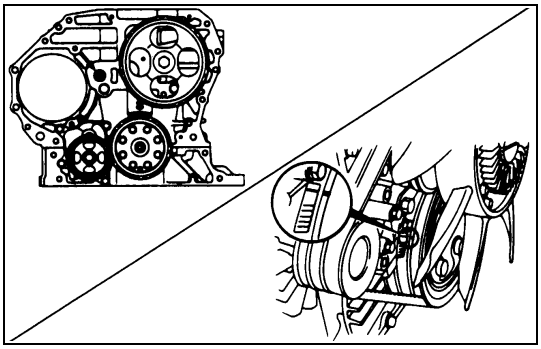

6A3-29-2.tif

27. Idle Gear A

1) Turn the crankshaft clockwise so that the engagement mark of the crankshaft gear faces to the shaft center of the idle gear A and the No.1 cylinder piston comes to the top dead center.
2) Align the crankshaft gear with the engagement mark of the idle gear and install the idle gear A.

Idle Gear A Bolt Torque	N•m (kg•m/lb•ft)
133 (13.6/98)	

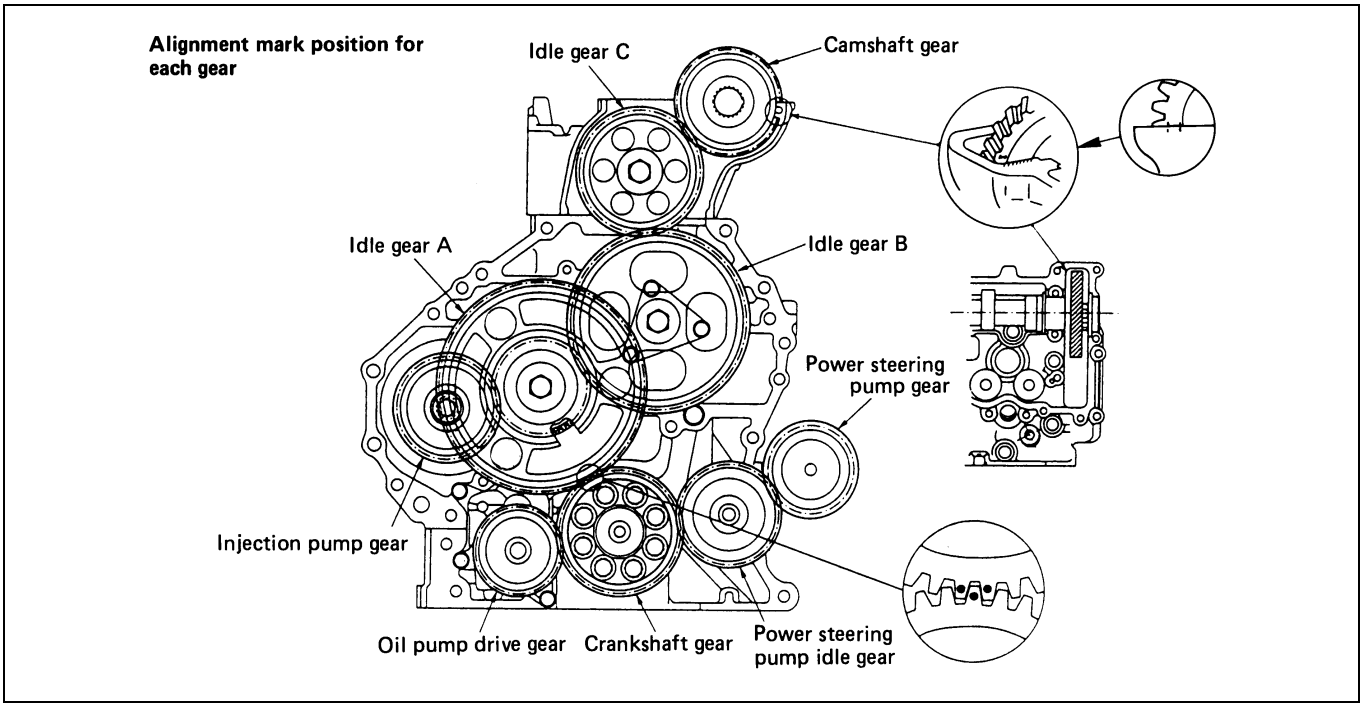

6A3-29-3.tif

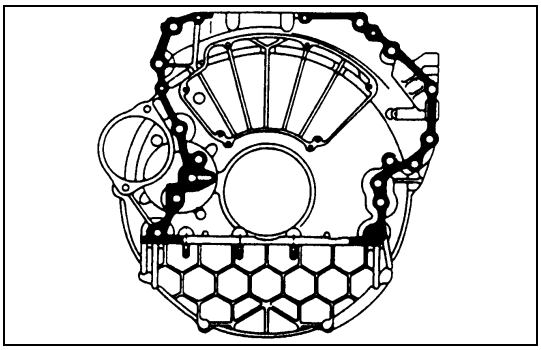

6A3-29-4.tif

26. Flywheel Housing

1) Carefully wipe any foreign material from the cylinder body rear face.
2) Apply the recommended liquid gasket (Three Bond 1207C) or its equivalent to the shaded areas shown in the illustration.

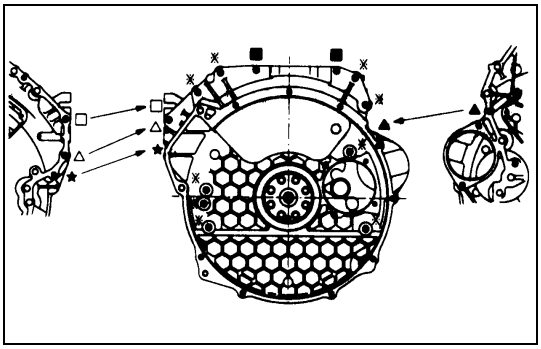

6A3-30-1.tif

3) Align the cylinder body knock pins with the flywheel housing knock pin holes.
4) Tighten the flywheel housing bolts to the specified torque shown in the illustration.

Flywheel Housing Bolt Torque	N•m (kg•m/lb•ft)
∗ :	96 (9.8/71)
★ :	48 (4.9/35)
□ :	94 (9.6/69)
■ :	25 (2.6/19)
△ :	76 (7.7/56)
▲ :	48 (4.9/35)

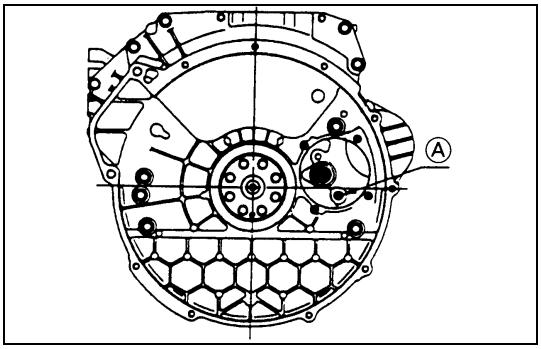

6A3-30-2.tif

- Tighten the bolts marked with "△" or "★" from the injection pump side, and those with "▲" from the cylinder body side.

Flywheel Housing Bolt Torque	N•m (kg•m/lb•ft)
Ⓐ :	96 (9.8/71)

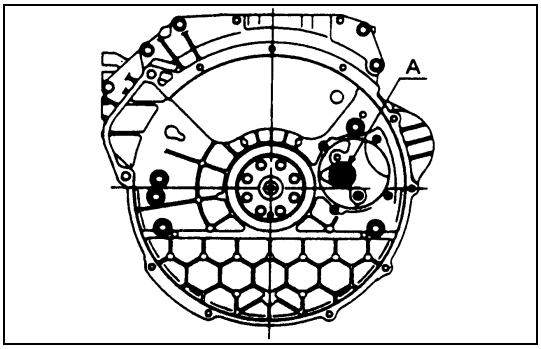

6A3-30-3.tif

25. Power Steering Pump Idle Gear

1) Apply the engine oil to the idle gear shaft.
2) Install the idle gear shaft ① with the idle gear ② to the cylinder body A portion as shown in the illustration.

Idle Gear Shaft Bolt Torque	N•m (kg•m/lb•ft)
135 (13.6/98)	

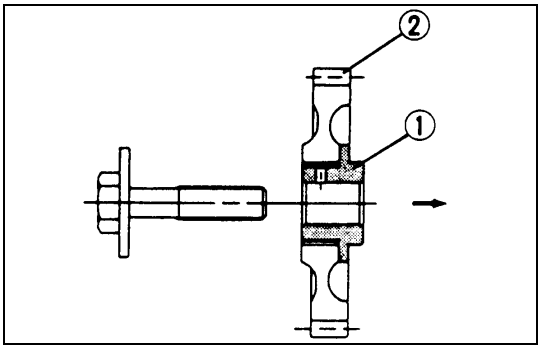

6A3-30-4.tif

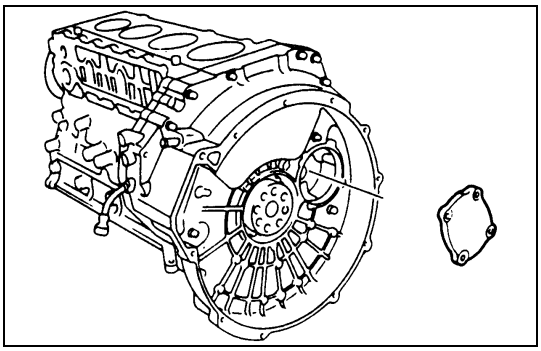

6A3-30-5.tif

24. Power steering Pump Idle Gear Cover

Install the gear cover with the O-ring.

Gear Cover Bolt Torque	N•m (kg•m/lb•ft)
19 (1.9/14)	

23. Oil Pan

22. Spacer Rubber (NKR model only)

Above works refer to “OIL PAN” section in this manual.

21. Crankshaft Rear Slinger

20. Crankshaft Rear Oil Seal

19. Flywheel Assembly

Above works refer to “CRANKSHAFT REAR OIL SEAL” section in this manual.

18. Injection Pump Assembly

Above works refer to “INJECTION PUMP ASSEMBLY” section in this manual.

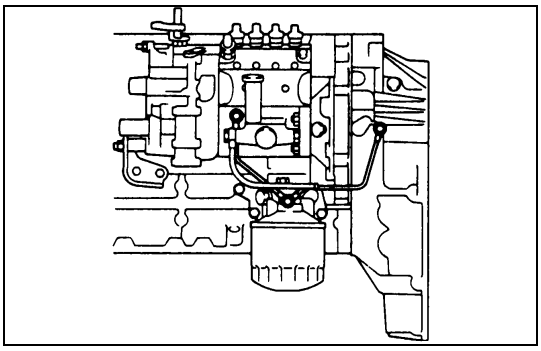

6A3-31-1.tif

17. Oil Pipe

Oil Pipe Joint Bolt Torque	N•m (kg•m/lb•ft)
17 (1.7/12)	

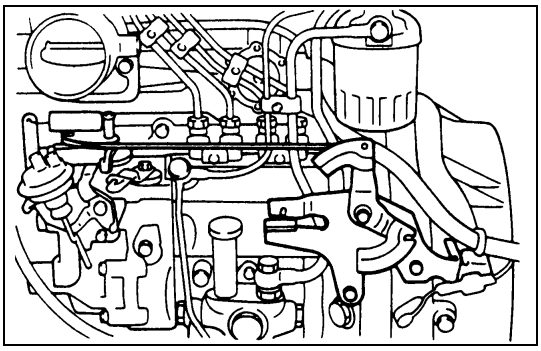

6A3-31-2.tif

16. Engine Control Lever Assembly

Engine Control Lever bolt Torque	N•m (kg•m/lb•ft)
24 (2.4/17)	

15. Engine Control Wire

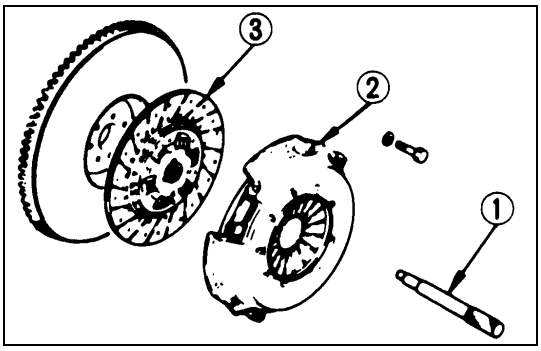

6A3-31-3.tif

14. Driven Plate

Use the clutch pilot aligner to install the driven plate.

Clutch Pilot Aligner: 5-8840-2240-0

① Clutch pilot aligner.

② Clutch pressure plate assembly.

③ Driven plate

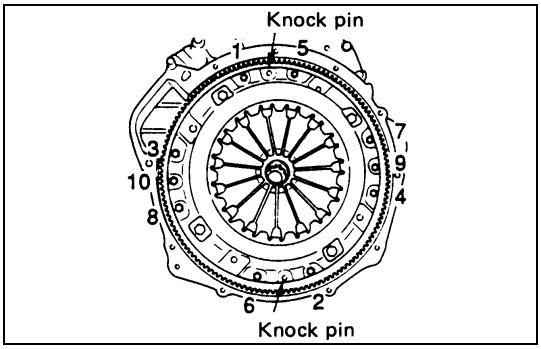

6A3-32-1.tif

13. Clutch Pressure Plate Assembly

1) Align the clutch pressure plate with the flywheel knock pin.
2) Tighten the pressure plate bolts to the specified torque in numerical order.

Clutch Pressure Plate Bolt Torque	N•m (kg•m/lb•ft)
40 (4.1/30)	

12. Cylinder Head Gasket

Above works refer to “CYLINDER HEAD GASKET” section in this manual.

11. Cylinder Head Assembly

Above works refer to “CYLINDER HEAD GASKET” section in this manual.

10. Camshaft Bearing Lower

9. Camshaft Assembly

8. Camshaft Bearing Upper

7. Camshaft Bearing Cap

6. Valve Cap

5. Rocker Arm Shaft Assembly

Above works refer to “CAMSHAFT ASSEMBLY” section in this manual.

4. Head Cover Gasket

3. Cylinder Head Cover

Above works refer to “CYLINDER HEAD COVER” section in this manual.

2. Nozzle Cover

1. Engine Assembly

Above works refer to “ENGINE ASSEMBLY” section in this manual.

VALVE GUIDE SEAL & VALVE SPRING

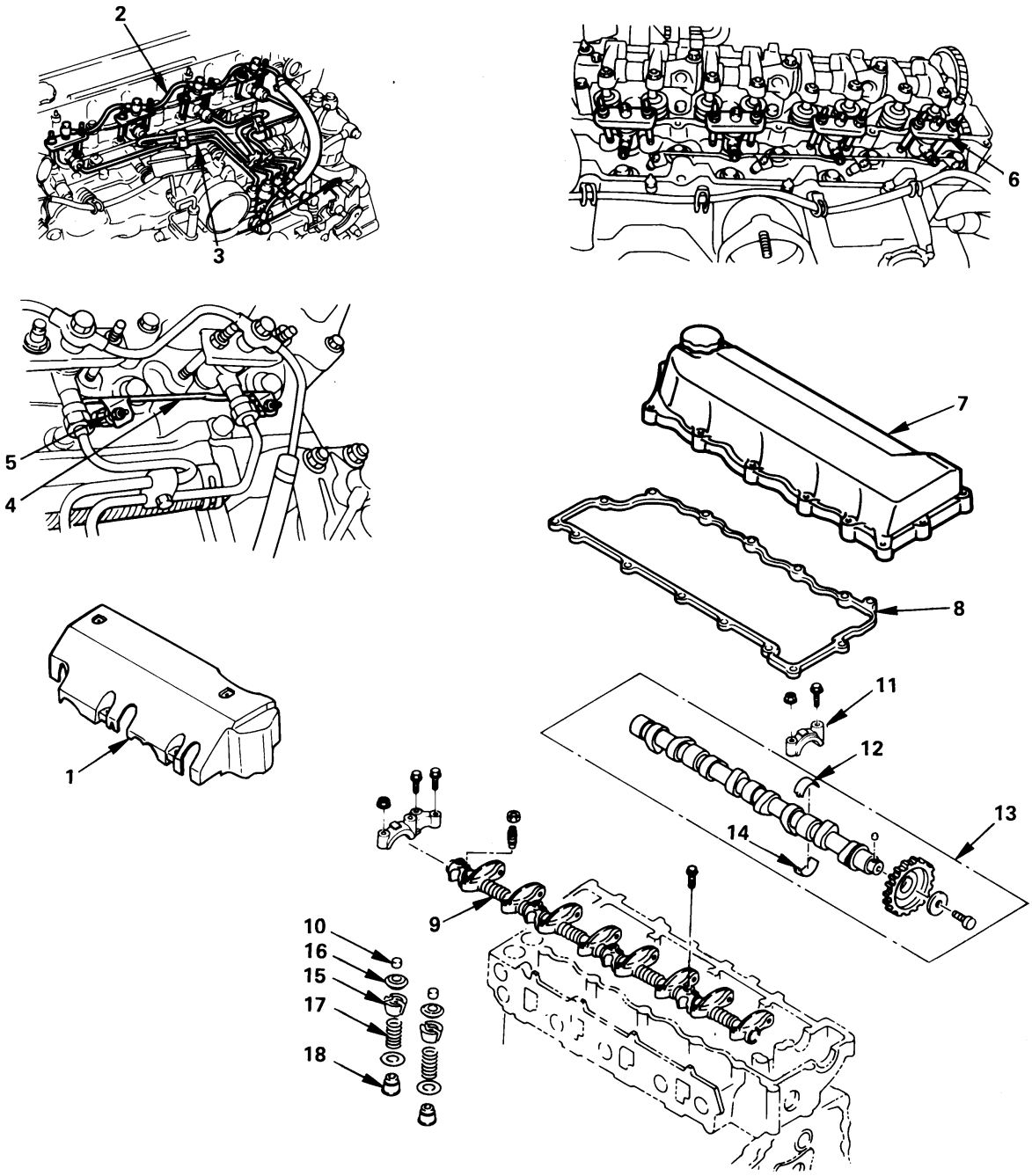

Removal steps

1. Nozzle cover
2. Leak off pipe
3. Injection pipe
4. Glow plug connector
5. Glow plug
6. Injection nozzle holder assembly
7. Cylinder head cover
8. Cylinder head cover gasket
9. Rocker arm shaft assembly
10. Valve cap
11. Camshaft bearing cap
12. Camshaft bearing upper
13. Camshaft assembly
14. Camshaft bearing lower
15. Cotter collar
16. Spring upper seat
17. Valve spring
18. Valve guide seal

Installation steps

To install, follow the removal steps in the reverse order.

6A3-33-1.tif

REMOVAL

Preparation

- Disconnect battery ground cable.
- Tilt the cab.

1. Nozzle Cover

2. Leak Off Pipe

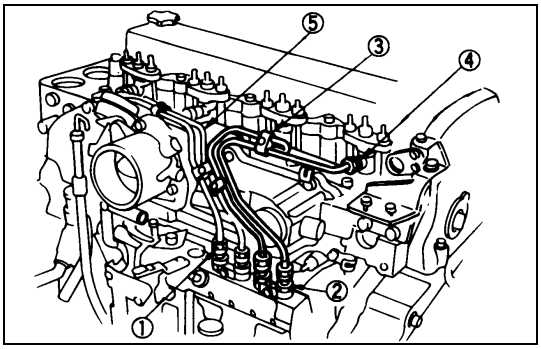

6A3-34-1.tif

3. Injection Pipe

- Loosen the injection pipe sleeve nuts ①.
  Do not apply excessive force to the injection pipes ⑤.
- Loosen the injection pipes clips ③.
  Remove the injection pipe assembly.
  Plug the delivery valve holder ② ports and nozzle holder ④ ports with caps to prevent the entry of foreign material.

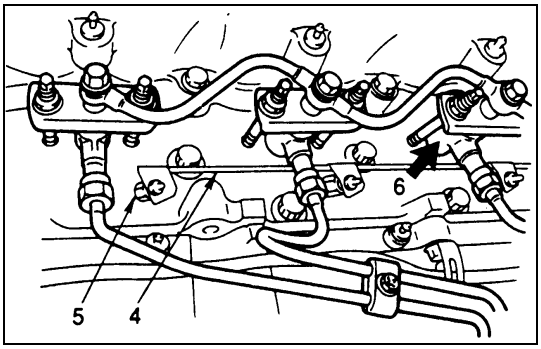

6A3-34-2.tif

4. Glow Plug Connector

5. Glow Plug

6. Injection Nozzle Holder Assembly

Mark the nozzle holder assemblies fitting positions by tagging each nozzle holder assembly with the cylinder number from which it was removed.

7. Cylinder Head Cover

8. Cylinder Head Cover Gasket

9. Rocker Arm Shaft Assembly

Above works refer to “ROCKER ARM SHAFT ASSEMBLY” section in this manual.

10. Valve Cap

11. Camshaft Bearing Cap

12. Camshaft Bearing Upper

13. Camshaft Assembly

14. Camshaft Bearing Lower

- If the camshaft bearings are to be reinstalled, mark their fitting positions by tagging each bearing with the cylinder number from which it was removed.

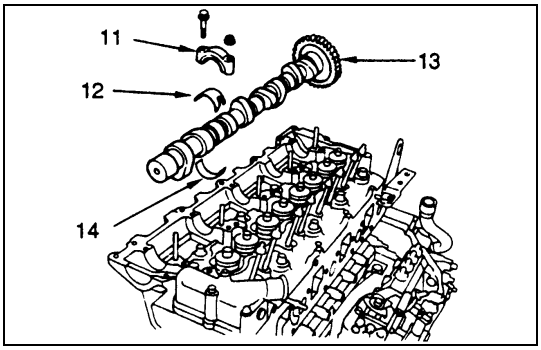

6A3-34-3.tif

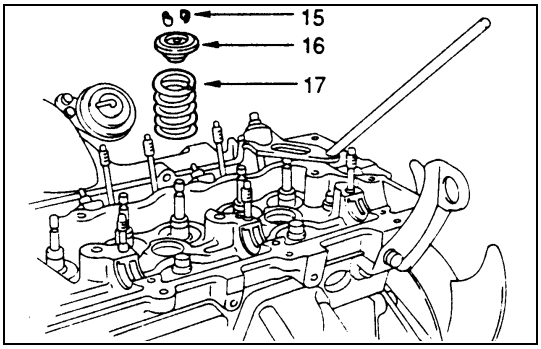

6A3-35-1.tif

15. Cotter Collar

16. Spring Upper Seat

17. Valve Spring

- Apply compressed air to cylinder from the glow plug hole to hold the valve in place.
- Using special tool, compress valve spring and remove cotter collar.

Valve Spring Compressor: 5-8840-2228-0

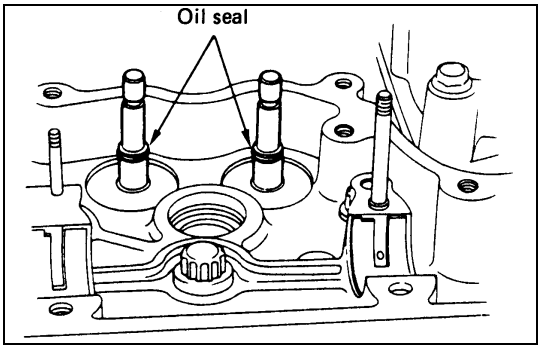

6A3-35-2.tif

18. Valve Guide Seal

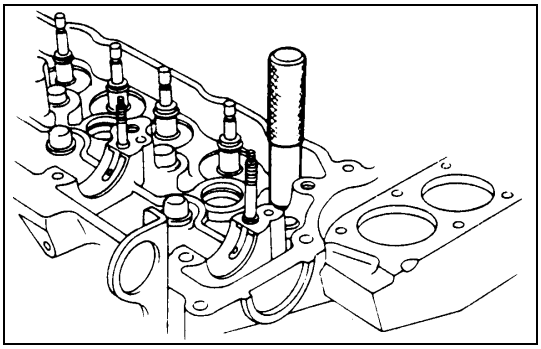
6A3-35-3.tif

INSTALLATION

18. Valve Guide Seal

- Apply a coat of engine oil to the valve guide seal inner face.
- Use a valve guide seal installer to install the valve guide seal to the valve guide

Valve Guide Seal Installer: 8-9439-6815-0

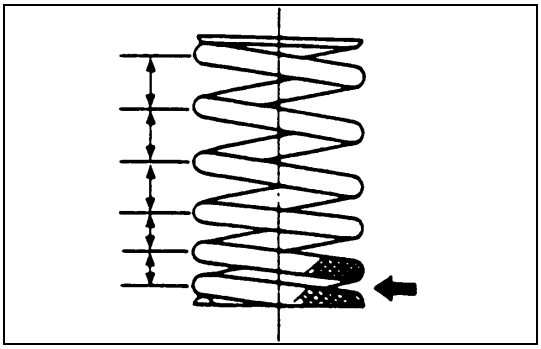
6A3-35-4.tif

17. Valve Spring

Install the valve spring with its fine pitched (or painted) end side down.

16. Spring Upper Seat

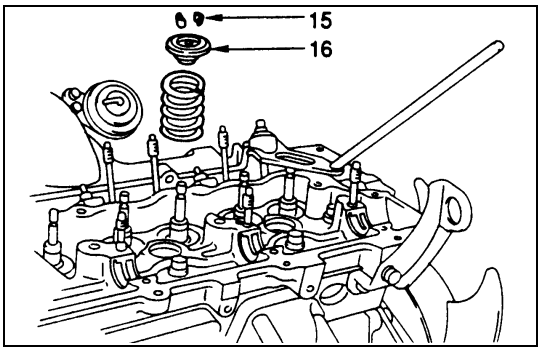

6A3-35-5.tif

15. Cotter Collar

1) Use the valve spring compressor to push the valve spring into position.
   Valve Spring Compressor: 5-8840-2228-0
2) Install the cotter collar to the valve stem.
3) Set the cotter collar by tapping around the head of the collar with a rubber hammer.

14. Camshaft Bearing Lower

13. **Camshaft Assembly**
12. **Camshaft Bearing Upper**
11. **Camshaft Bearing Cap**
10. **Valve Cap**

    Above works refer to “CAMSHAFT ASSEMBLY” section in this manual.
9. **Rocker Arm shaft Assembly**

    Above works refer to “ROCKER ARM SHAFT ASSEMBLY” section in this manual.
8. **Head Cover Gasket**
7. **Cylinder Head Cover**

    Above works refer to “CYLINDER HEAD COVER” section in this manual.

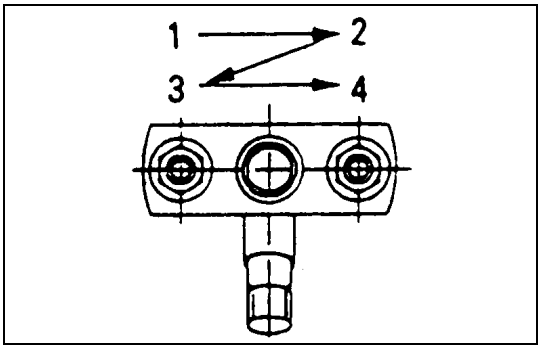

6A3-36-1.tif

6. **Injection Nozzle Holder Assembly**

    Tighten the nozzle holder flange nuts to the specified torque in the numerical order shown in the illustration.

Nozzle Holder Flange Nut Torque	N•m (kg•m/lb•ft)
19 (1.9/14)	

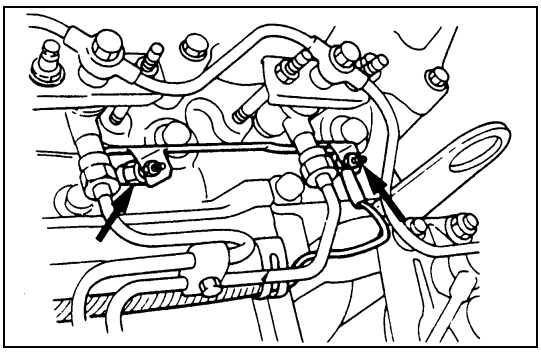
6A3-36-2.tif

5. **Glow Plug**

Glow Plug Torque	N•m (kg•m/lb•ft)
23 (2.3/17)	

4. **Glow Plug Connector**

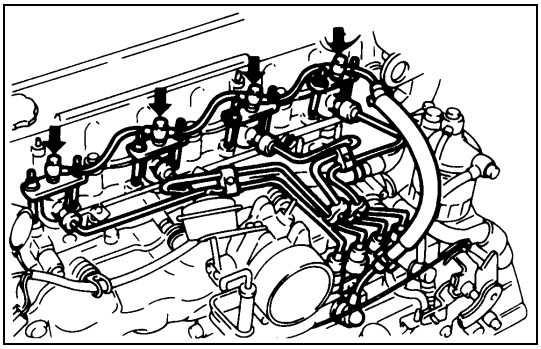
6A3-36-3.tif

3. **Injection Pipe**
2. **Leak Off Pipe**

    Above works refer to “INJECTION PUMP ASSEMBLY” section in this manual.
1. **Nozzle Cover**
    - Connect the negative battery cable
    - Lower the cab
    - Start engine and check for fuel leakage carefully.

ROCKER ARM SHAFT ASSEMBLY

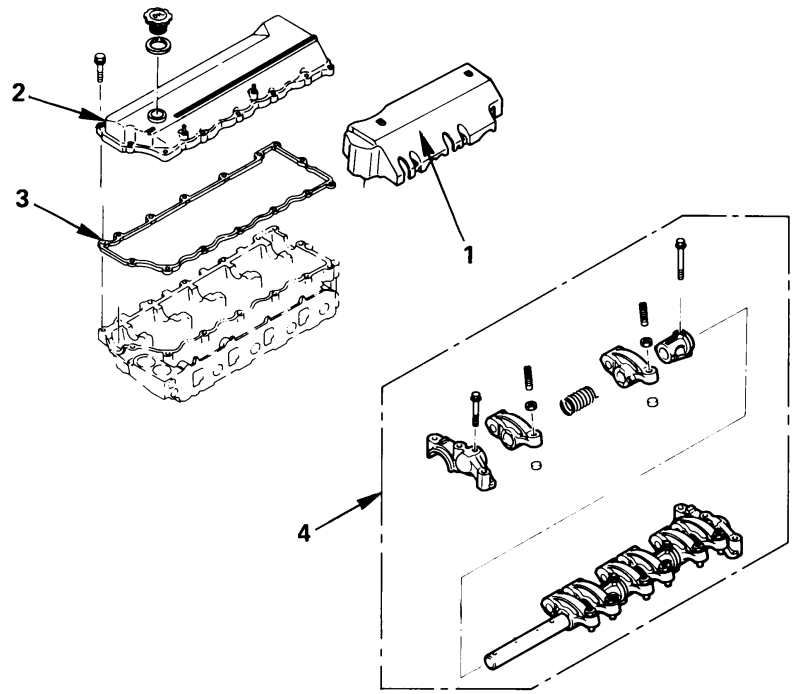

Removal steps
1. Nozzle cover
2. Cylinder head cover
3. Cylinder head cover gasket
4. Rocker arm shaft assembly

Installation steps
To install, follow the removal steps in the reverse order.

6A3-37-1.tif

REMOVAL

Preparation
- Disconnect battery ground cable.
- Tilt the cab.

1. Nozzle Cover

2. Cylinder Head Cover

3. Cylinder Head Cover Gasket

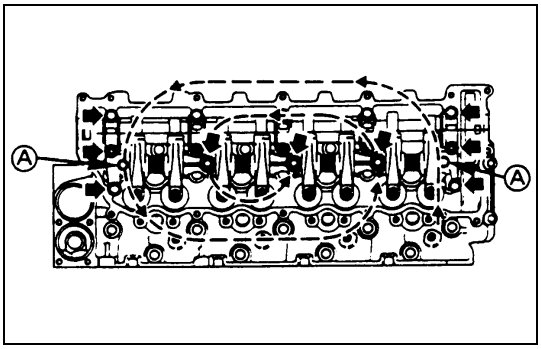

6A3-37-2.tif

4. Rocker Arm Shaft Assembly

1) Loosen the rocker arm shaft bracket nuts and bolts in numerical order a little at a time and remove the rocker arm shaft assembly with the camshaft brackets.
2) Leave the Ⓐ indicated bolt unremoved on this occasion, since it is the rocker arm fixing bolt.

CAUTION:

Failure to loosen the rocker arm shaft bracket nuts and bolts in numerical order a little at a time will adversely affect the rocker arm shaft.

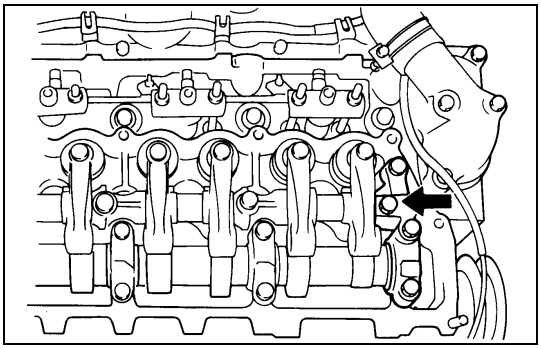

6A3-38-1.tif

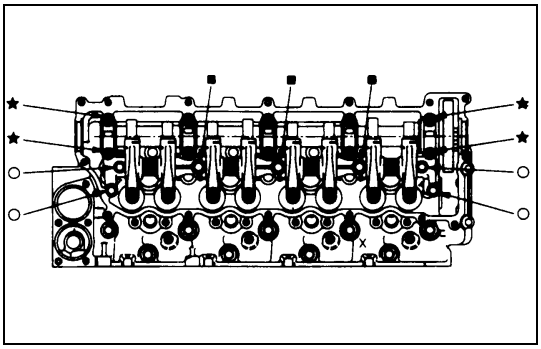

6A3-38-2.tif

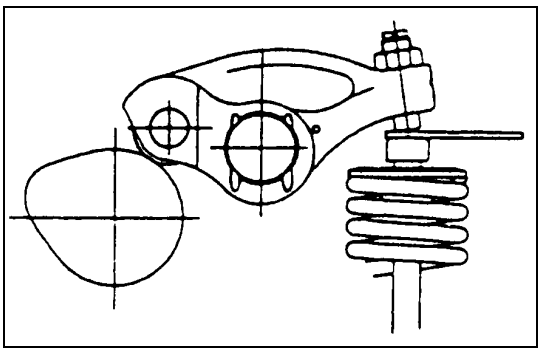

6A3-38-3.tif

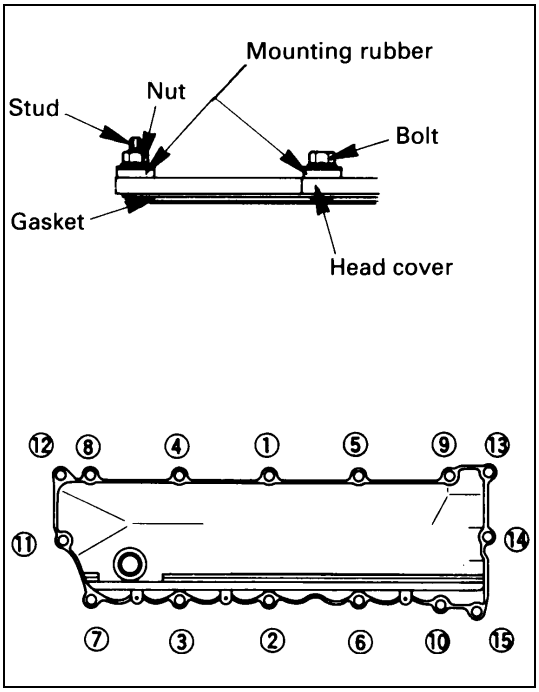

6A3-38-4.tif

INSTALLATION

4. Rocker Arm Shaft Assembly

1) Slightly loosen the bolts marked with the arrow in the illustration.
2) Loosen the rocker arm adjust screws and apply engine oil to the rocker arm roller portions.
3) Install the rocker arm assembly on the cylinder head.
4) Tighten the rocker arm shaft breaker nuts and bolts to the specified torque in numerical order a little at a time as shown in the illustration.

Rocker Arm Shaft Bracket Nut and Bolt Torque — N•m (kg•m/lb•ft)

★ Nut	27 (2.8/20)
■ Bolt	56 (5.7/41)
□ Bolt	27 (2.8/20)

5) Apply engine oil to the threaded portion of the nuts marked with "★" and the bolts with "■" shown in the illustration left, and then tighten them to the specified torque.

Adjust the valve clearance.

Valve Clearance — mm (in)

At cold	0.4 (0.016)

Above works refer to "SERVICING" VALVE CLEARANCE ADJUSTMENT" previously section in this manual.

3. Head Cover Gasket

Install the gasket to the cylinder head cover.

2. Cylinder Head Cover

1) Install the cylinder head cover.
2) Tighten the cylinder head cover nuts and bolts to the specified torque in the numerical order shown in the illustration.

Cylinder Head Cover Nut and Bolt Torque — N•m (kg•m/lb•ft)

18 (1.8/13)

1. Nozzle Cover

- Connect the battery ground cable.
- Lower the cab.
- Start the engine and check for the oil leakage carefully.

CAMSHAFT ASSEMBLY

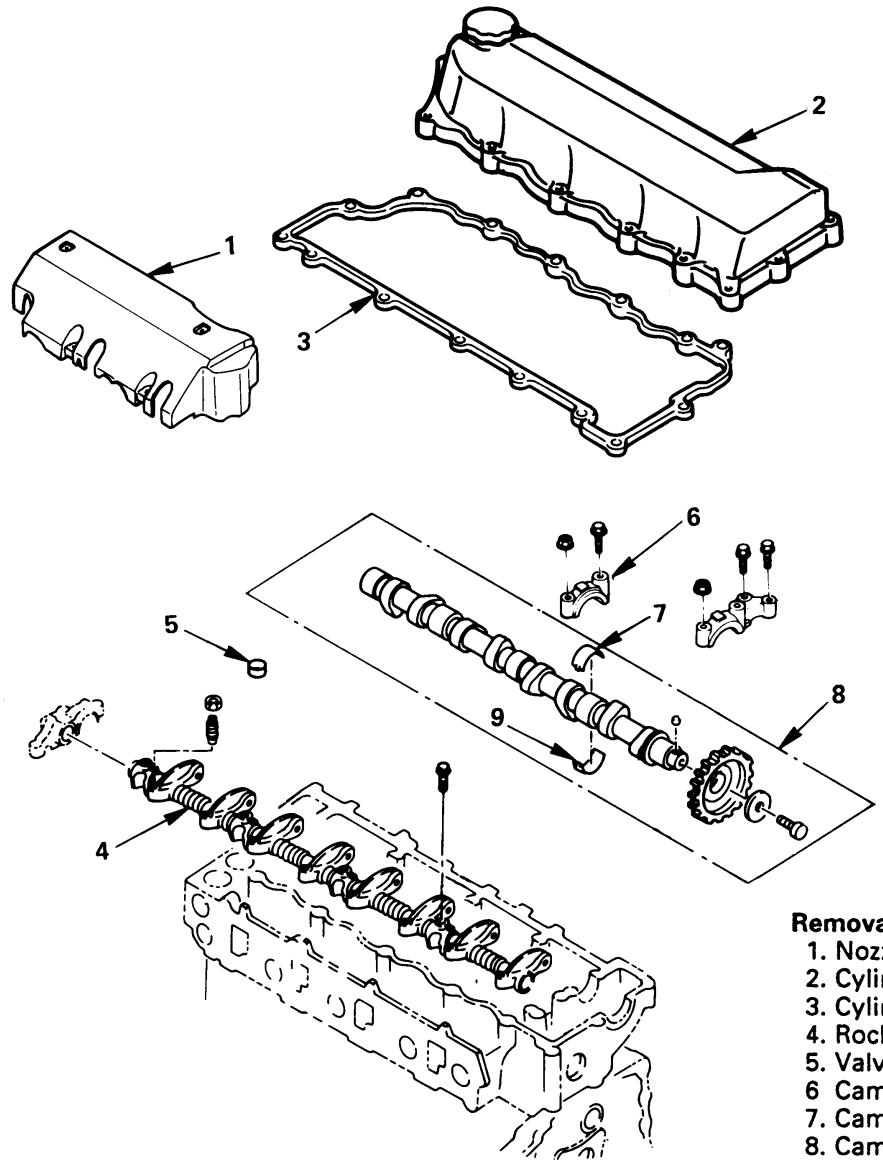

Removal steps

1. Nozzle cover
2. Cylinder head cover
3. Cylinder head cover gasket
4. Rocker arm shaft assembly
5. Valve cap
6 Camshaft bearing cap
7. Camshaft bearing upper
8. Camshaft assembly
9. Camshaft bearing lower

Installation steps

To install, follow the removal steps in the reverse order.

6A3-39-1.tif

REMOVAL

Preparation

- Disconnect battery ground cable.
- Tilt the cab.

1. **Nozzle Cover**
2. **Cylinder Head Cover**
3. **Cylinder Head Cover Gasket**

4. **Rocker Arm Shaft Assembly**
   Above works refer to “ROCKER ARM SHAFT ASSEMBLY” section in this manual.
5. **Valve Cap**
6. **Camshaft Bearing Cap**
7. **Camshaft Bearing Upper**
8. **Camshaft Assembly**
9. **Camshaft Bearing Lower**
   - If the camshaft bearings are to be reinstalled, mark their fitting positions by tagging each bearing with the cylinder number from which it was removed.

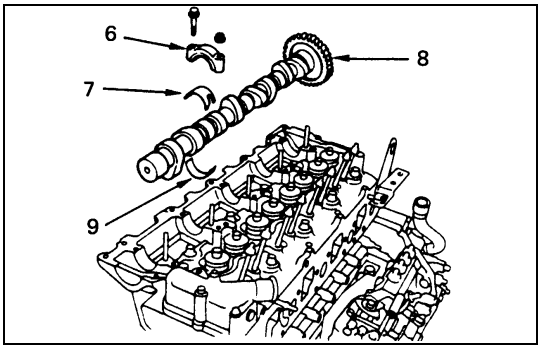

6A3-40-1.tif

INSTALLATION

9. **Camshaft Bearing Lower**
8. **Camshaft Assembly**
   1) Turn the crankshaft in the direction of normal rotation until the timing mark on the crankshaft damper pulley is aligned with the TDC notched line.
   2) Apply engine oil to the camshaft journal and the camshaft bearing surfaces before installation.
   3) Carefully align the camshaft gear “I” mark and the cylinder head upper face shown in the illustration.

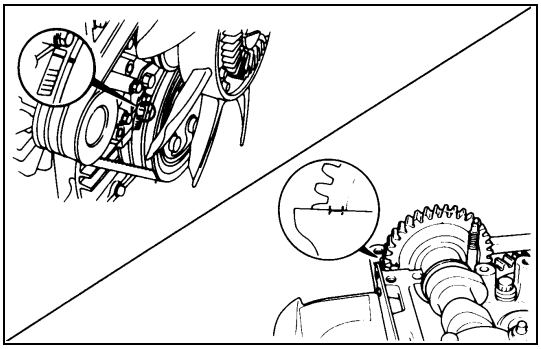
6A3-40-2.tif

7. **Camshaft Bearing Upper**
6. **Camshaft Bearing Cap**
   - Install the bearing caps with the bearing cap head mark (arrow) facing forward.
   - Apply a coat of engine oil to the bearing cap bolt and stud threads.

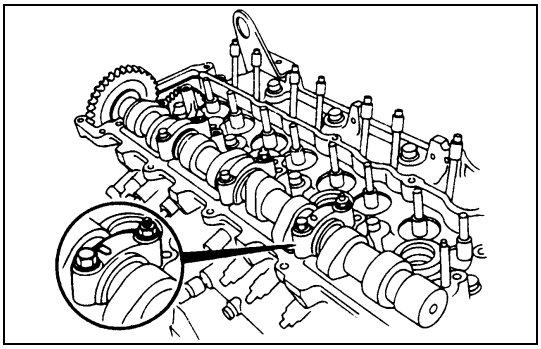
6A3-40-3.tif

- Tighten the bearing cap bolts and studs to the specified torque.

Camshaft Bearing Cap Nut and Bolt Torque	N•m (kg•m/lb•ft)
	27 (2.8/20)

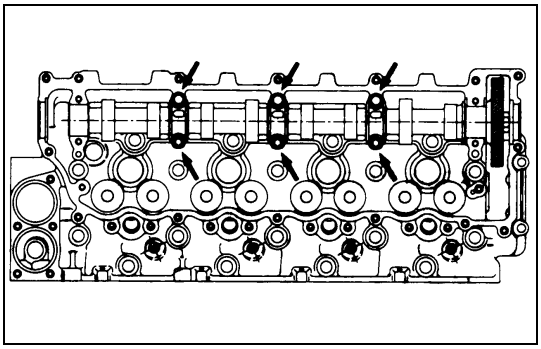
6A3-40-4.tif

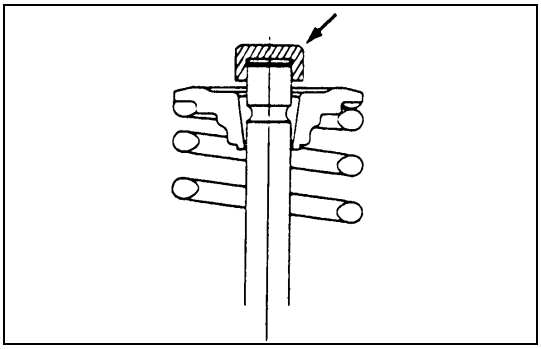

6A3-41-1.tif

5. **Valve Cap**
   1. Apply engine oil to the inside of the valve caps and install them to the valve stem end.

   CAUTION:
   Take sufficient care not to let valve caps fall into the gear.

4. **Rocker Arm Shaft Assembly**
   Above works refer to “ROCKER ARM SHAFT ASSEMBLY” section in this manual.
3. **Cylinder Head Cover Gasket**
2. **Cylinder Head Cover**
   Above works refer to “CYLINDER HEAD COVER” section in this manual.
1. **Nozzle Cover**
   - Connect the battery ground cable.
   - Lower the cab.
   - Start engine and check for oil leakage carefully.

CYLINDER HEAD
(Engine right side)

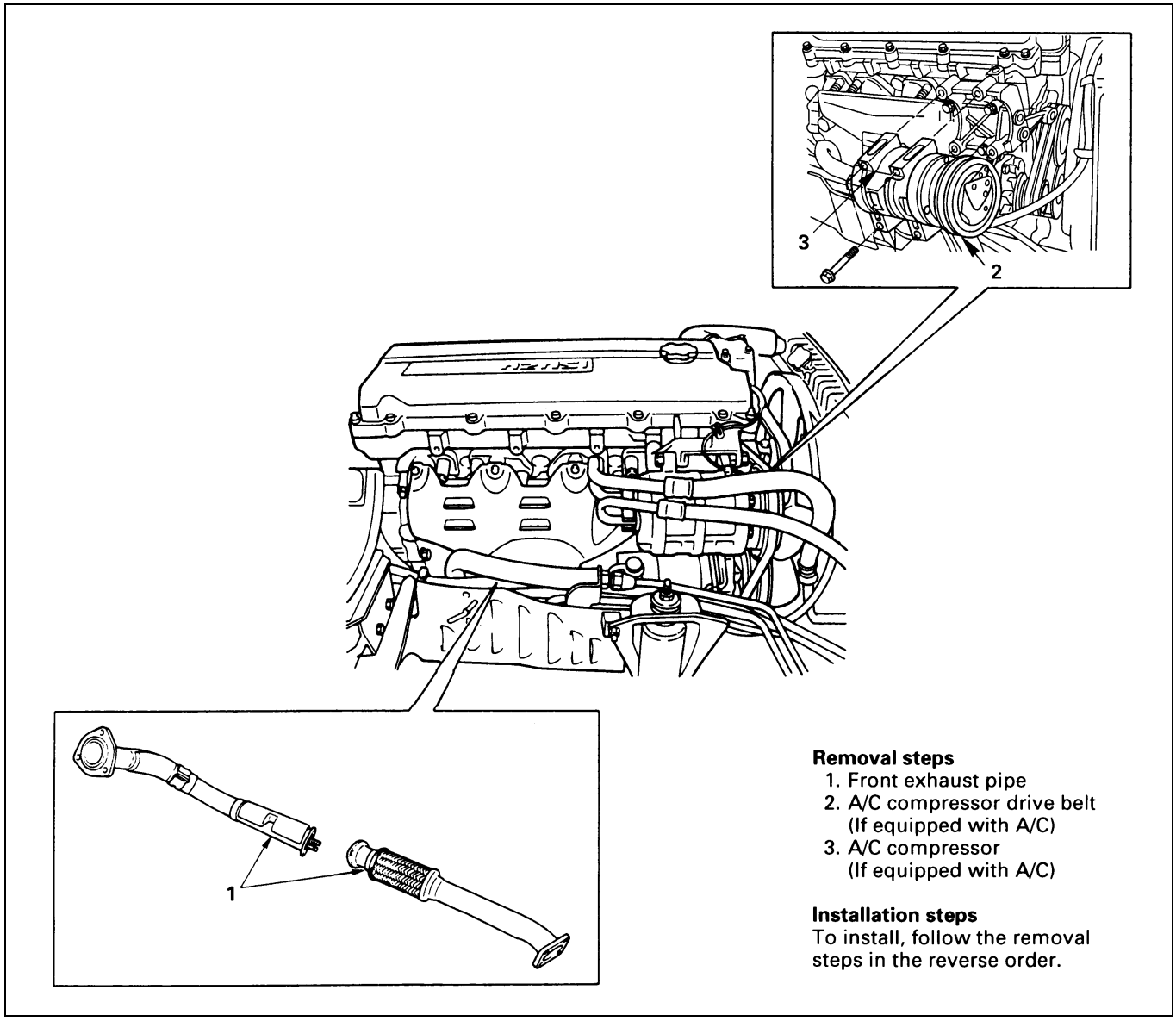

6A3-42-1.tif

REMOVAL

Preparation

- Disconnect battery ground cable
- Tilt the cab.
- Drain coolant

1. **Front Exhaust Pipe**
2. **Air Conditioning (A/C) Compressor Drive Belt (If equipped with A/C)**
3. **A/C Compressor (If equipped with A/C)**
   1) Disconnect magnetic clutch harness connector.
   2) Dismount the compressor together with the hoses from the A/C compressor bracket, and fasten it with a wire to the appropriate location.

(Engine left side)

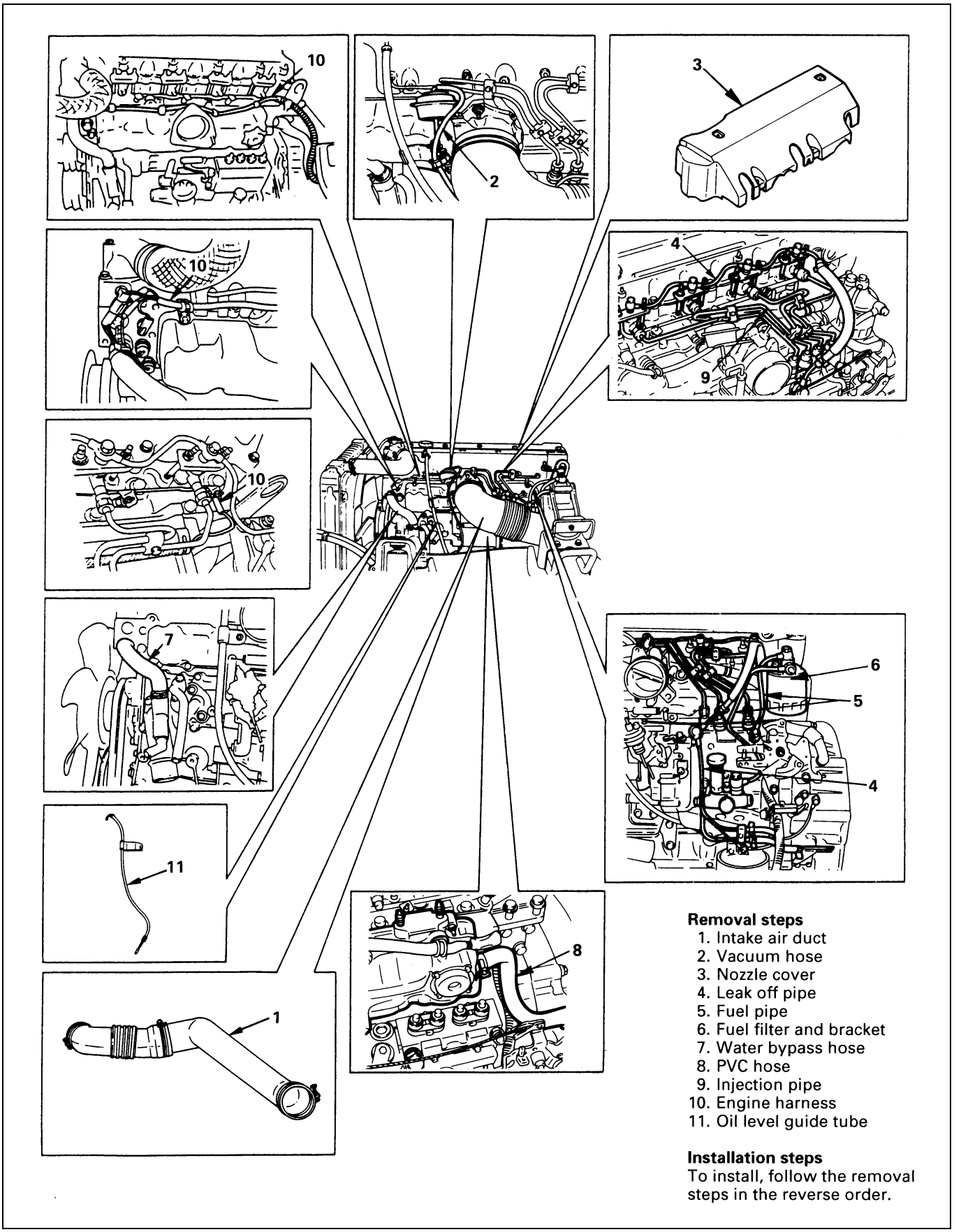

Removal steps

1. Intake air duct
2. Vacuum hose
3. Nozzle cover
4. Leak off pipe
5. Fuel pipe
6. Fuel filter and bracket
7. Water bypass hose
8. PVC hose
9. Injection pipe
10. Engine harness
11. Oil level guide tube

Installation steps

To install, follow the removal steps in the reverse order.

6A3-43-1.tif

REMOVAL

1. **Intake Air Duct**
   1) Remove the clips at the connections with the inlet cover and with the air cleaner.
   2) Remove the intake air duct with the connecting hoses attached.
2. **Vacuum Hose**
3. **Nozzle Cover**
4. **Leak Off Pipe**
5. **Fuel Pipe**
6. **Fuel filter & Bracket**
7. **Water Bypass Hose**
8. **Positive Crankcase Ventilation (PCV) Hose**

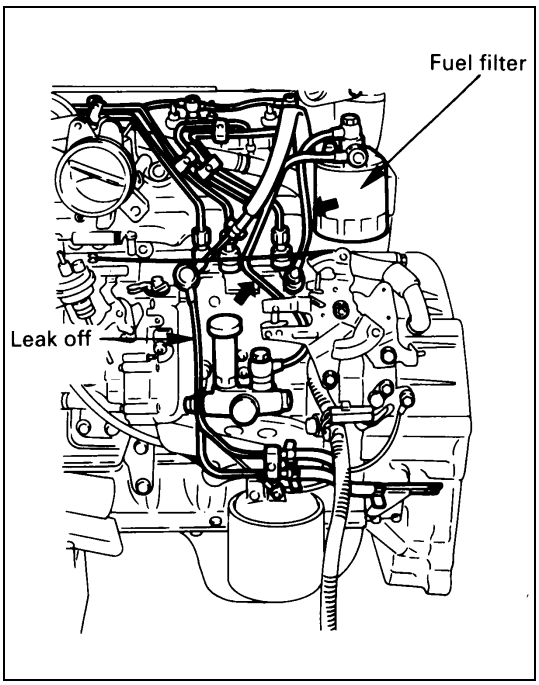

6A3-44-1.tif

9. **Injection Pipe**
   1) Loosen the injection pipe sleeve nuts ①.
      Do not apply excessive force to the injection pipes ⑤.
   2) Loosen the injection pipes clips ③.
   3) Remove the injection pipe assembly.
      Plug the delivery valve holder ② ports and nozzle holder ④ ports with caps to prevent the entry of foreign material.

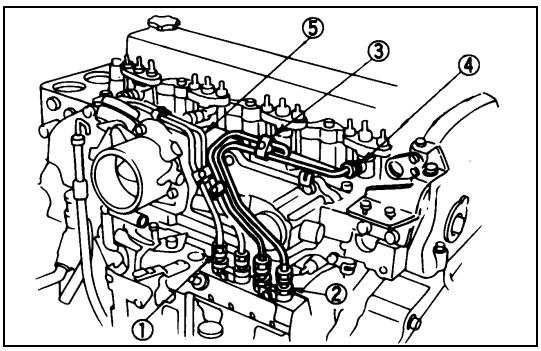

6A3-44-2.tif

10. **Engine Harness**
    Disconnect thermometer unit, thermo switch, tachometer sensor and glow plug harness connectors an separate harness from clips.

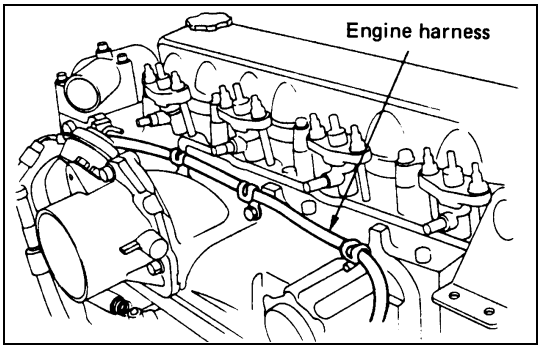

6A3-44-3.tif

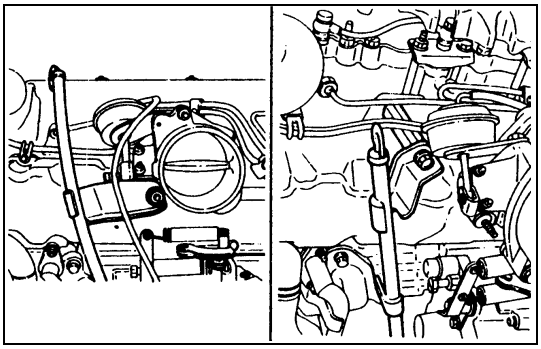

6A3-45-1.tif

11. Oil Level Gauge Guide Tube

Remove the guide tube fixing bolt and pull out the guide tube.

(Cylinder head side)

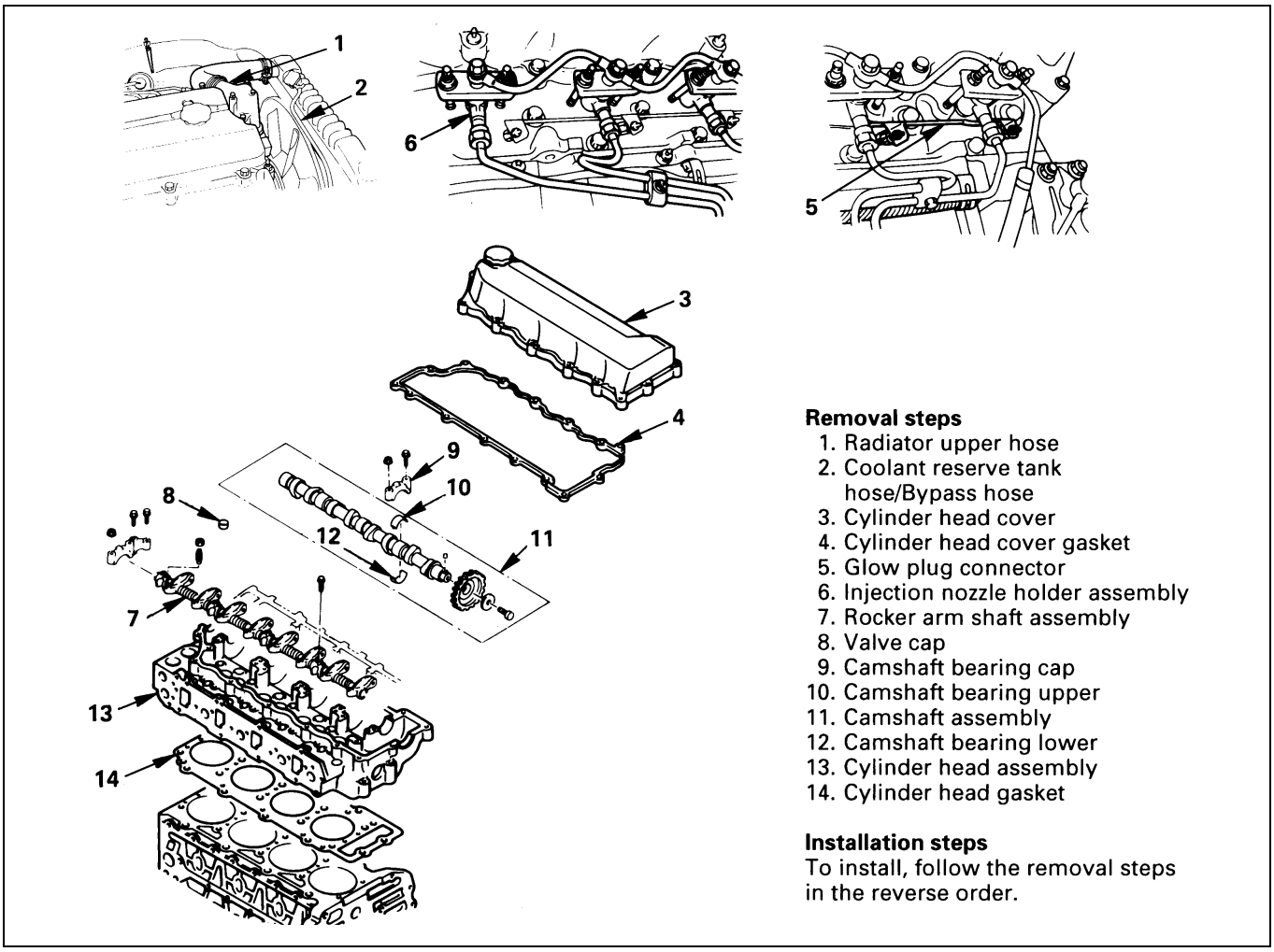

Removal steps

1. Radiator upper hose
2. Coolant reserve tank hose/Bypass hose
3. Cylinder head cover
4. Cylinder head cover gasket
5. Glow plug connector
6. Injection nozzle holder assembly
7. Rocker arm shaft assembly
8. Valve cap
9. Camshaft bearing cap
10. Camshaft bearing upper
11. Camshaft assembly
12. Camshaft bearing lower
13. Cylinder head assembly
14. Cylinder head gasket

Installation steps

To install, follow the removal steps in the reverse order.

6A3-45-2.tif

REMOVAL

1. **Radiator Upper Hose**
2. **Coolant Reserve Tank Hose/Bypass Hose**
3. **Cylinder Head Cover**
4. **Cylinder Head Cover Gasket**

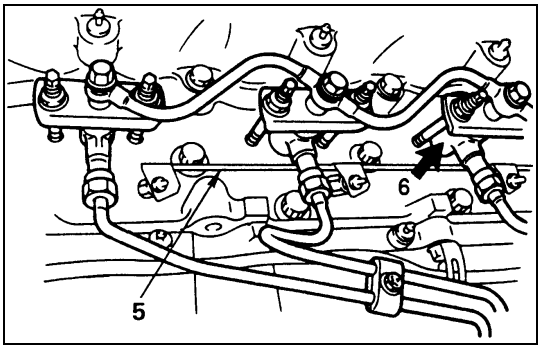

6A3-46-1.tif

5. **Glow Plug Connector**
6. **Injection Nozzle Holder Assembly**
   Mark the nozzle holder assemblies fitting positions by tagging each nozzle holder assembly with the cylinder number from which it was removed.

7. **Rocker Arm Shaft Assembly**
8. **Valve Cap**
9. **Camshaft Bearing Cap**
10. **Camshaft Bearing Upper**
11. **Camshaft Assembly**
12. **Camshaft Bearing Lower**
    Above works refer to “ROCKER ARM SHAFT ASSEMBLY AND CAMSHAFT ASSEMBLY” section in this manual.

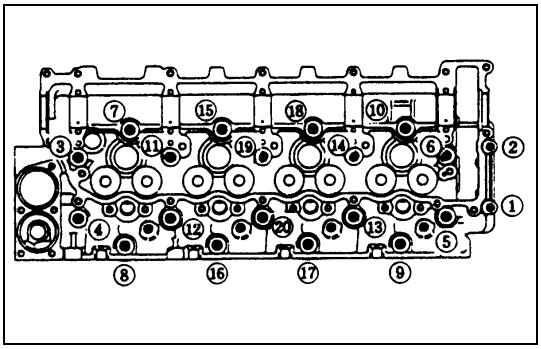

6A3-46-2.tif

13. **Cylinder Head Assembly**
    Loosen the cylinder head bolts in numerical order a little at a time.

    CAUTION:
    Failure to loosen the cylinder head bolts in numerical order a little at a time will adversely affect the cylinder head lower surface.
14. **Cylinder Head Gasket**

    CAUTION:
    Do not reuse the cylinder head gasket.

INSTALLATION

14. **Cylinder Head Gasket**
    1) When any of the cylinder block, crankshaft, crankshaft bearing, connecting rod, connecting rod bearing, and piston is replaced with a new one, cylinder head gasket thickness ahold be determined newly.
    2) When replacing the cylinder head gasket alone without replacing any of the parts mentioned in 1) above, the gasket to be used should be the same grade as the one used before.
    3) Correct cylinder head gasket thickness is important. Installing the wrong thickness gasket can result in greatly reduced engine performance.
    4) There are three cylinder head gaskets available.

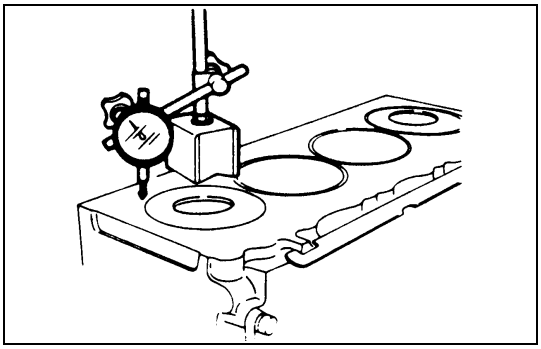

6A3-47-1.tif

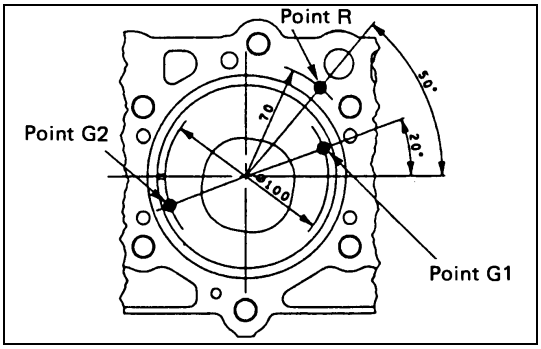

6A3-47-2.tif

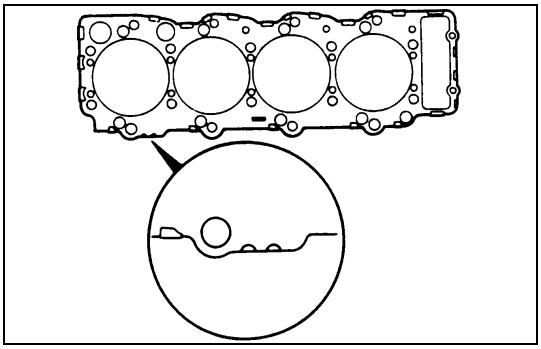

6A3-47-3.tif

Piston Head Projection Measurement

- Select a cylinder head gasket.
- Clean thoroughly the top faces of the piston head and the cylinder body.
- Use the dial gauge to measure the piston head projection. Take measurements at two location for each cylinder.
- The measurement points of the piston head and the reference point of the cylinder body are shown in the illustration left.

Measurement points : Points G1 and G2 of the piston head

Reference point : Point R on the top face of the cylinder body

NOTE:

Note that there are three types of a cylinder head gasket available as below, according to the piston projection.

- For each cylinder, calculate the average value (Ti) of the piston projection.
- Find the maximum value (Timax) of the average of each cylinder.
- Based on the Timax obtained, select a gasket of the appropriate grade.

4HF1/4HF1-2/4HG1-T

Cylinder Head Gasket Selection mm (in)

Gasket Grade	Ti max	Gasket Thickness (Reference)
A	0.579 - 0.659 (0.0228 - 0.0259)	1.70 (0.0669)
B	0.659 - 0.739 (0.0259 - 0.0291)	1.75 (0.0689)
C	0.739 - 0.819 (0.0291 - 0.0322)	1.80 (0.0708)

4HE1-T/4HE1-TC

Cylinder Head Gasket Selection mm (in)

Gasket Grade	Ti max	Gasket Thickness (Reference)
A	0.529 - 0.609 (0.0208 - 0.0240)	1.70 (0.0669)
B	0.609 - 0.679 (0.0240 - 0.0267)	1.75 (0.0689)
C	0.679 - 0.759 (0.0267 - 0.0300)	1.80 (0.0708)

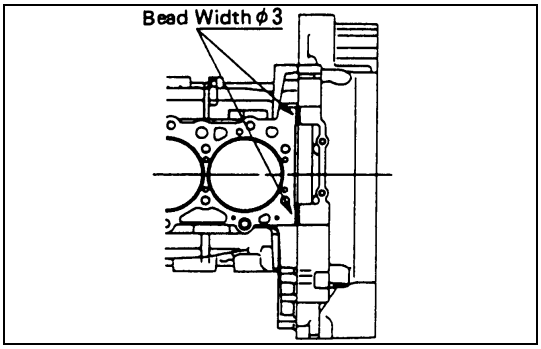

6A3-48-1.tif

5) Apply a 3mm (0.1 inch) bead or recommended liquid gasket (Three Bond 1207C) or its equivalent to the shaded areas shown in the illustration.

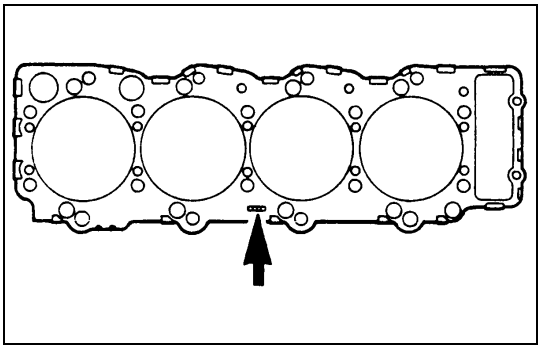

6A3-48-2.tif

6) Install the cylinder head gasket with its “PART NUMBER” mark facing up and toward the left of the engine.

CAUTION:

Do not reuse the cylinder head gasket.

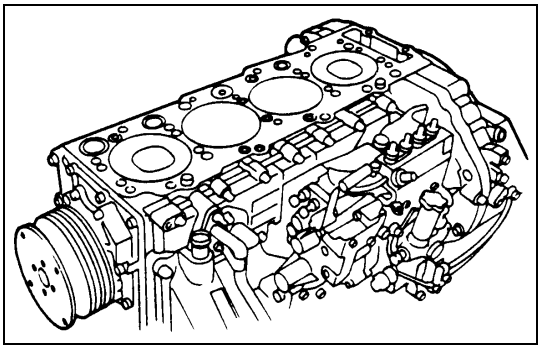

6A3-48-3.tif

13. Cylinder Head Assembly

1) Align the cylinder body dowels and the cylinder head dowel holes.
2) Carefully place the cylinder head on the cylinder head gasket.
3) Apply a coat of molybdenum disulfide grease to the M14 cylinder head bolt threads and setting faces and apply a coat of engine oil to the M10 cylinder head bolt threads and setting faces.
4) Use the angular tightening method to tighten the bolts (M14) to the specified torque in three steps following the numerical order shown in the illustration.

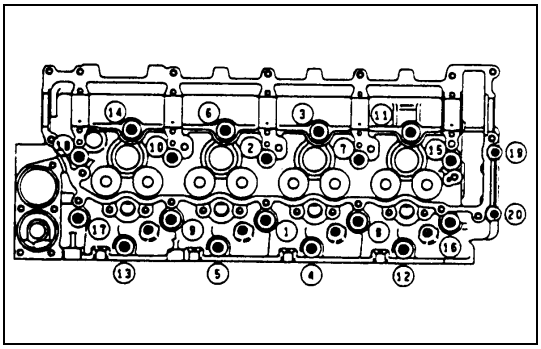

6A3-48-4.tif

Cylinder Head Bolt Torque

(M14) (① ~ ⑱) N•m (kg•m/lb•ft)

1st Step	2nd Step	3rd Step
98 (10/72)	147 (15/108)	30° - 60°

5) Tighten the cylinder head to the flywheel housing bolts (M10) to the specified torque.

Cylinder Head Bolt Torque

(M10) (19 ~ 20) N•m (kg•m/lb•ft)

38 (3.9/28)

12. **Camshaft Bearing Lower**
11. **Camshaft Assembly**
10. **Camshaft Bearing Upper**
9. **Camshaft Bearing Cap**
8. **Valve Cap**

   Above works refer to “CAMSHAFT ASSEMBLY” section in this manual.
7. **Rocker Arm Shaft Assembly**

   Above works refer to “ROCKER ARM SHAFT ASSEMBLY” section in this manual.

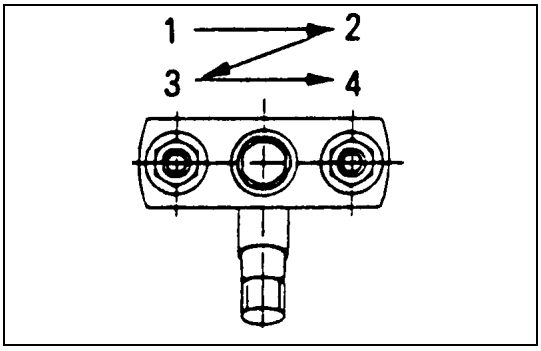

6A3-49-1.tif

6. **Injection Nozzle Holder Assembly**

   Tighten the nozzle holder flange nuts to the specified torque in the numerical order shown in the illustration.

Nozzle Holder Flange Nut Torque	N•m (kg•m/lb•ft)
19 (1.9/14)	

5. **Glow Plug Connector**
4. **Head Cover Gasket**

   Install the gasket to the cylinder head cover.
3. **Cylinder Head Cover**

   Above works refer to “CYLINDER HEAD COVER” section in this manual.
2. **Coolant Reserve Tank Hose/Bypass Hose**
1. **Radiator Upper Hose**

INSTALLATION (Engine left side)

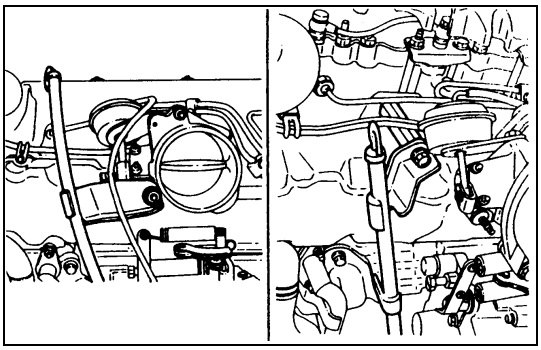
6A3-49-2.tif

11. **Oil Level Gauge Guide Tube**
    1) Install the O-rings to the guide tube lower portion and insert the guide tube completely to the cylinder body.
    2) Tighten the guide tube bolt to the specified torque.

Guide Tube Bolt Torque	N•m (kg•m/lb•in)
13 (1.3/113)	

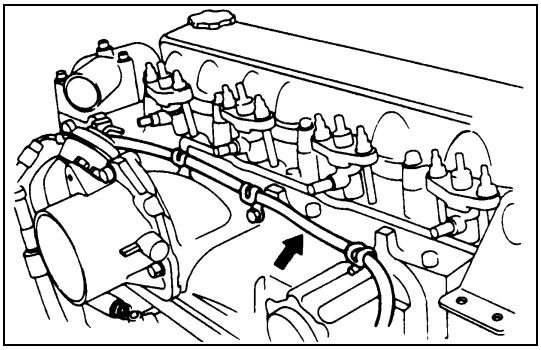
6A3-49-3.tif

10. **Engine Harness**

    Connect thermometer unit, thermo switch, tachometer sensor and glow plug harness connector and fasten the engine harness with clips.

9. **Fuel Injection Pipe Assembly**
   Above works refer to “INJECTION PUMP ASSEMBLY” section in this manual.
8. **Positive Crankcase Ventilation (PCV) Hose**
7. **Water Bypass Hose**
6. **Fuel Filter & Bracket**

Fuel Filter Bracket Torque	N•m (kg•m/lb•ft)
34 (3.5/25)	

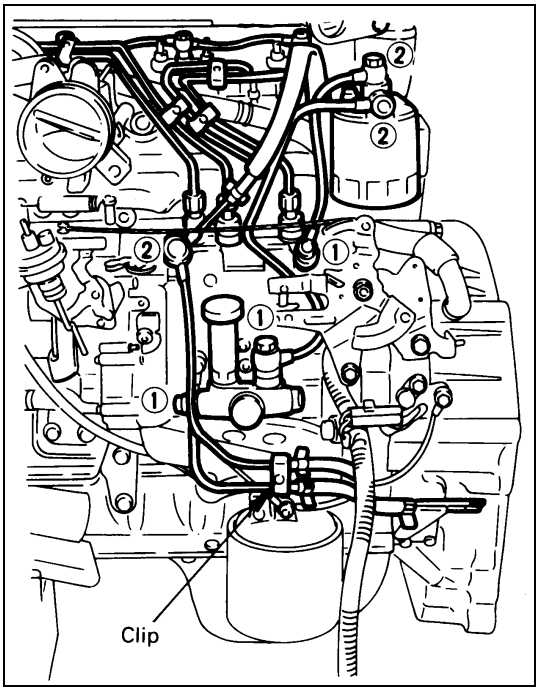

6A3-50-1.tif

5. **Fuel Pipe**
   Do not apply excessive force to the fuel pipe.

Fuel Pipe Joint Bolt ① Torque	N•m (kg•m/lb•ft)
41 (4.2/30)	

Fuel Pipe Joint Bolt ② Torque	N•m (kg•m/lb•ft)
23 (2.3/17)	

Clip Screw Torque	N•m (kg•m/lb•in)
4 (0.4/35)	

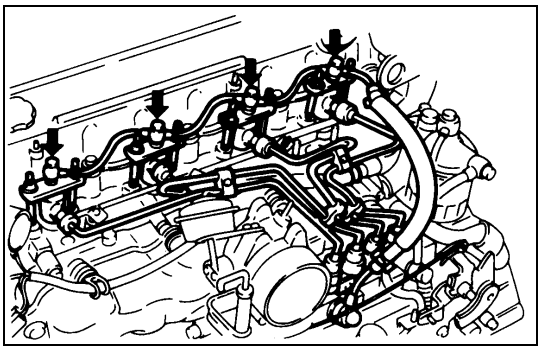
6A3-50-2.tif

4. **Leak Off Pipe**

Leak-off Pipe Joint Bolt Torque	N•m (Kg•m/lb•in)
13 (1.3/113)	

3. **Nozzle Cover**
2. **Vacuum Hose**
1. **Intake Air Duct**

INSTALLATION (Engine right side)

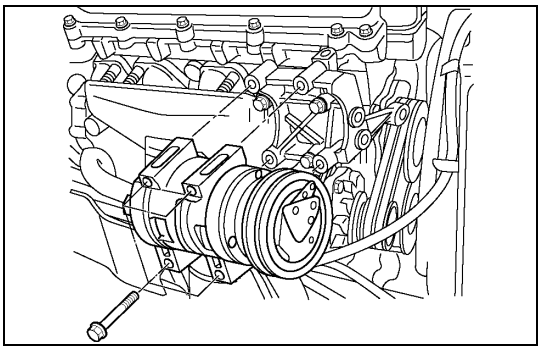

901LV058.tif

3. Air Conditioning (A/C) Compressor (If equipped with A/C)

Tighten fixing bolts to the specified torque.

A/C Compressor Bolt Torque	N•m (kg•m/lb•ft)
48 (4.9/35)	

Note:

When tightening the compressor fixing bolts, tighten first the 2 bolts on the rear side, and then the remaining 2 on the front side.

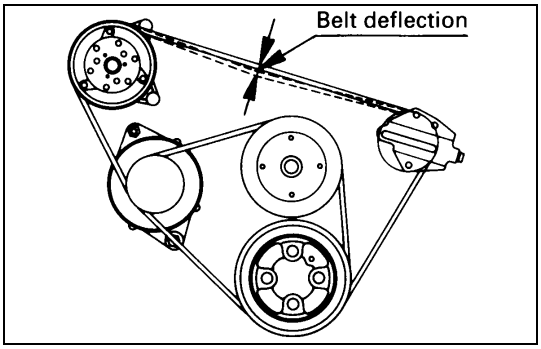

6A3-51-2.tif

2. A/C Compressor Drive Belt (If equipped with A/C)

1) Install drive belt adjust belt tension by adjusting bolt and tighten locking nut to the specified torque.
2) Depress the drive belt mid-portion with a 10kg (22lb/98N) force.

Drive Belt Deflection	mm (in)
16 - 20 (0.63 - 0.79)…New belt 18 - 22 (0.71 - 0.87)…Reuse belt	

Locking Nut Torque	N•m (kg•m/lb•ft)
27 (2.8/20)	

1. Front Exhaust Pipe

Exhaust Manifold Side Torque	N•m (kg•m/lb•ft)
67 (6.8/49)	

Exhaust Brake Side	N•m (kg•m/lb•ft)
17 (1.7/12)	

- Connect the negative battery cable.
- Lower the cab.
- Start engine and check for oil, fuel and water leakage care fully.

CIRCUMFERENCE PARTS OF CYLINDER HEAD

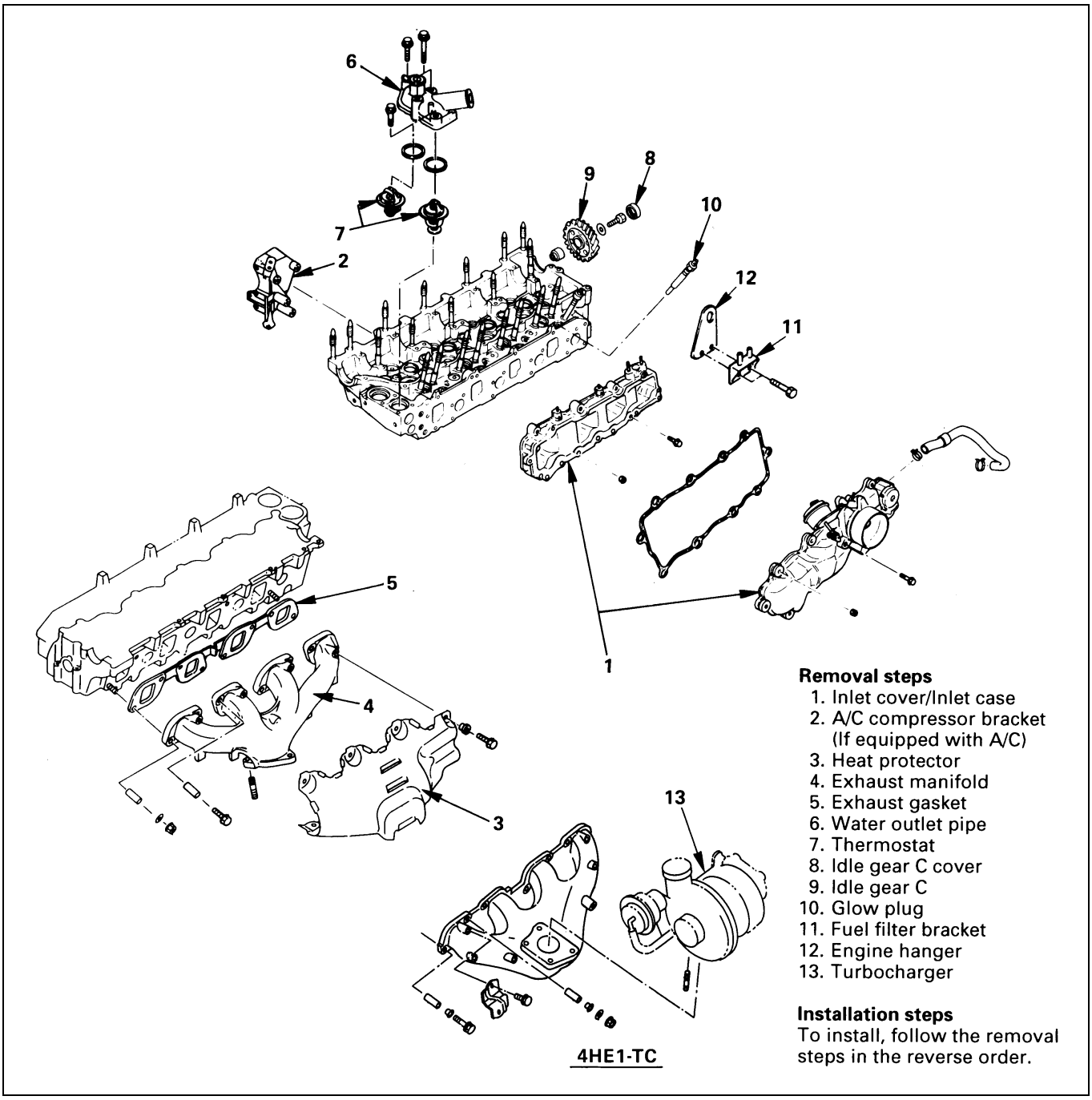

Removal steps

1. Inlet cover/Inlet case
2. A/C compressor bracket (If equipped with A/C)
3. Heat protector
4. Exhaust manifold
5. Exhaust gasket
6. Water outlet pipe
7. Thermostat
8. Idle gear C cover
9. Idle gear C
10. Glow plug
11. Fuel filter bracket
12. Engine hanger
13. Turbocharger

Installation steps

To install, follow the removal steps in the reverse order.

6A3-52-1.tif

REMOVAL

Preparation

- Disconnect battery ground cable
- Tilt the cab
- Drain coolant
- Remove each part from the cylinder head assembly. For details, refer to the “CYLINDER HEAD” in this section.

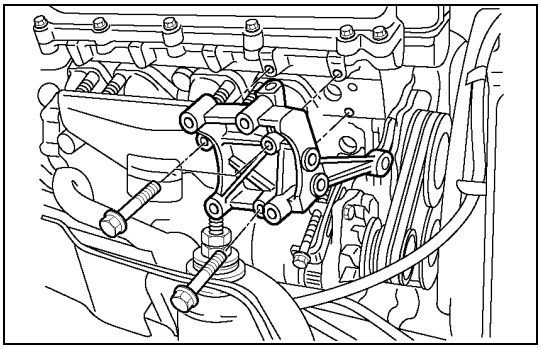

901LV057.tif

1. Inlet Cover/Inlet Case
2. Air Conditioning (A/C) Compressor Bracket (If equipped with A/C)
3. Heat Protector
4. Exhaust Manifold
5. Exhaust Gasket
6. Water Outlet Pipe
7. Thermostat

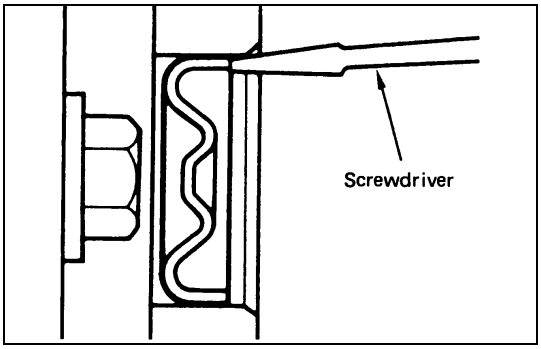

6A3-53-2.tif

8. Idle Gear C Cover
   Tap the outside of the sealing cup with a screwdriver to deform one end of it and draw it out with pliers.
9. Idle Gear C
10. Glow Plug

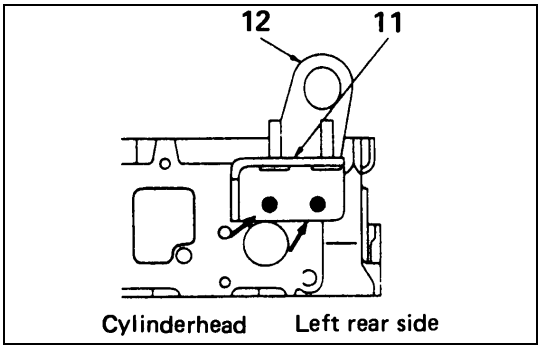

6A3-53-3.tif

11. Fuel Filter Bracket
12. Engine Hanger

INSTALLATION

12. Engine Hanger
11. Fuel Filter Bracket

Fuel Filter Bracket Bolt Torque	N•m (kg•m/lb•ft)
104 (10.6/77)	

10. Glow Plug

Glow Plug Torque	N•m (kg•m/lb•ft)
23 (2.3/17)	

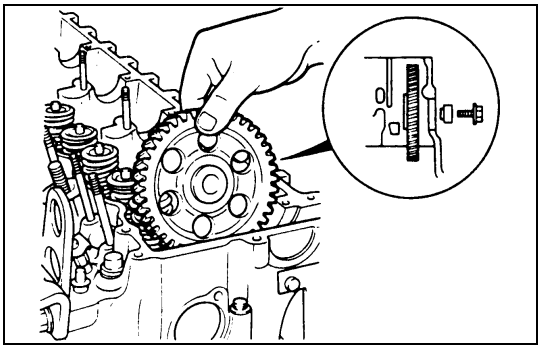

6A3-54-1.tif

9. Idle Gear C

1) Apply engine oil to the idle gear shaft, bushing and idle gear before installation.
2) Install the idle gear with the boss side facing to the camshaft as shown in the illustration.

Idle Gear C Bolt Torque	N•m (kg•m/lb•ft)
95 (9.7/70)	

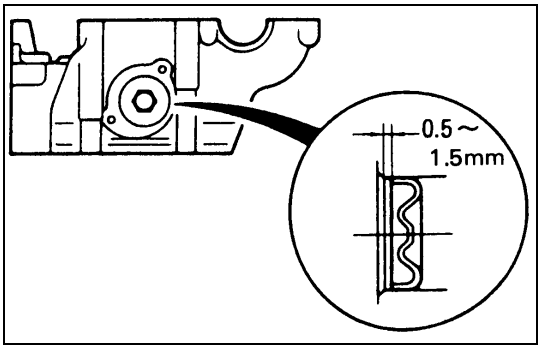

6A3-54-2.tif

8. Idle Gear C Cover

1) Apply the recommended liquid gasket (LOCTITE 262) or its equivalent to the outside of the sealing cup and install it to the cylinder head.
2) Use the sealing cup installer and a hammer to drive the sealing cup into position from the cylinder head side as shown in the illustration.
   Sealing Cup Installer: 5-8840-2222-0

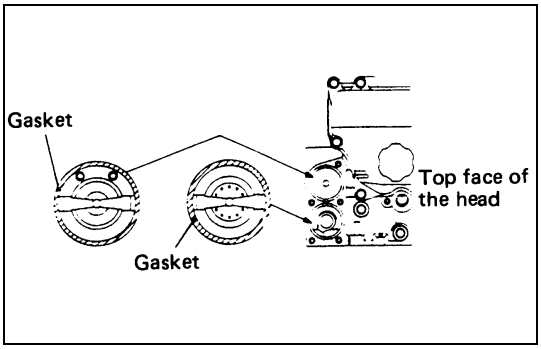

6A3-54-3.tif

7. Thermostat

Install the gaskets to the thermostat and install them to the cylinder head as shown in the illustration.

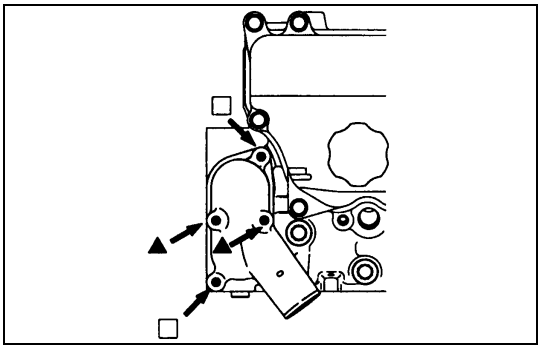

6A3-54-4.tif

6. Water Outlet Pipe

Water Outlet Pipe Bolt Torque	N•m (kg•m/lb•ft)
24 (2.4/17)	

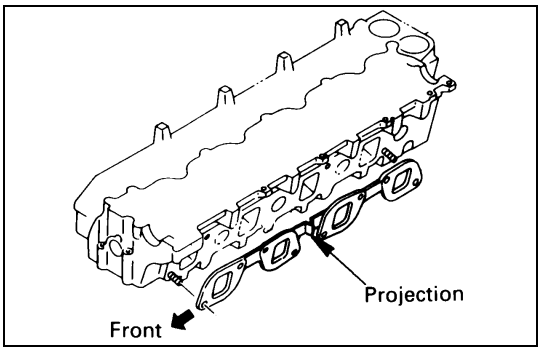

6A3-54-5.tif

5. Exhaust Gasket

Insert the gasket into the stud provided to the cylinder head (with the projection of the gasket on this side).

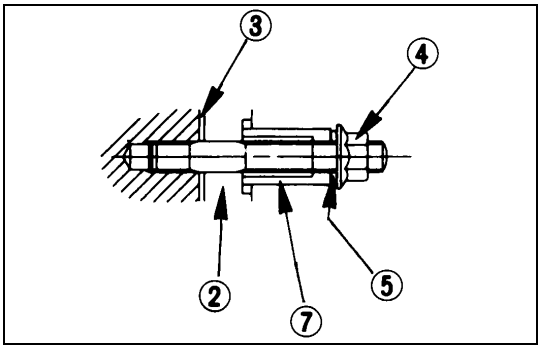

6A3-55-1.tif

4. Exhaust Manifold

1. Install exhaust manifold gaskets ③, exhaust manifold ②, distance pieces ⑦, dish washers ⑤ and nuts ④ to the stud bolts shown in the illustration.

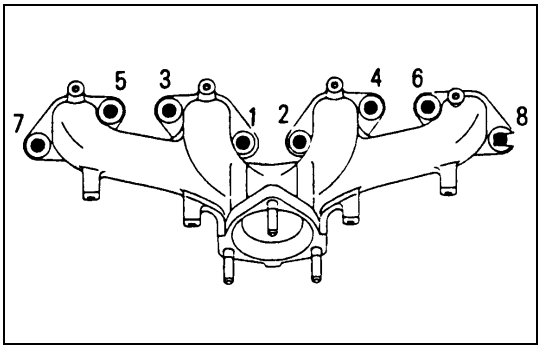

6A3-55-2.tif

2. Tighten the nuts to the specified torque in the numerical order shown in the illustration.

Exhaust Manifold Nut Torque	N•m (kg•m/lb•ft)
34 (3.5/25)	

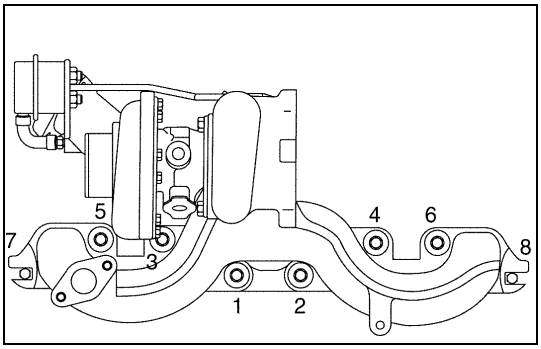

036LX005.tif

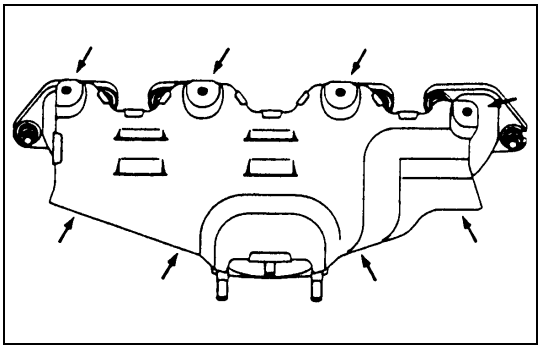
6A3-55-3.tif

3. Heat Protector

Heat Protector Bolt Torque	N•m (kg•m/lb•in)
10 (1.0/87)	

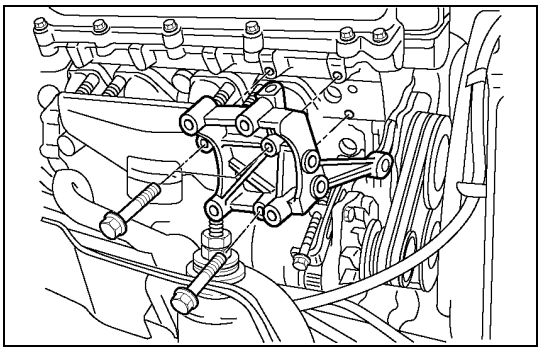
901LV057.tif

2. Air Conditioning (A/C) Compressor Bracket (If equipped with A/C)

Tighten fixing bolts to the specified torque.

A/C Compressor Bracket

Bolt Torque	N•m (kg•m/lb•ft)
48 (4.9/35)	

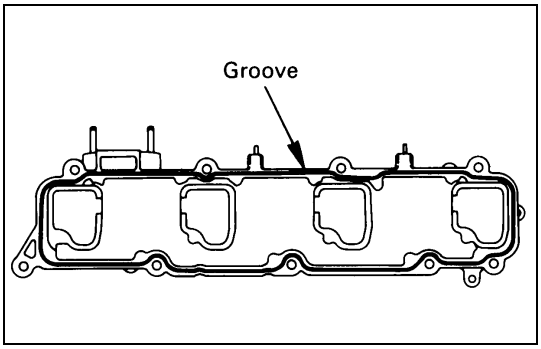

6A3-55-5.tif

1. Inlet Cover/Inlet Case

1) Apply 2mm-3mm (0.16-0.20 in) bead of the recommended liquid gasket (Three Bond 1207C)or its equivalent on the groove of the inlet case fitting surfaces shown in the illustration.
- Clean the inlet case fitting surface of the cylinder head.

2) Install the inlet case to the cylinder head.
- Install the inlet case within 7 minutes after application of liquid gasket.

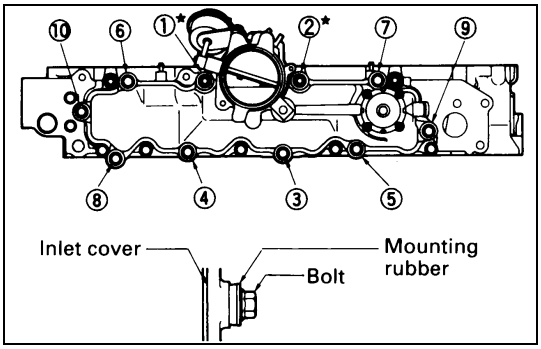

6A3-56-1.tif

- Attach harness clips (①, ⑥ and ⑦) and tighten the inlet cover bolts and nuts to the specified torque in the numerical order shown in the illustration.
- ★ marks are located on nut positions.

Inlet Cover Bolt and Nut Torque	N•m (kg•m/lb•ft)
13 (1.3/9)	

Referring to “CYLINDER HEAD” in this section, install the remaining parts.

OIL FILTER ASSEMBLY

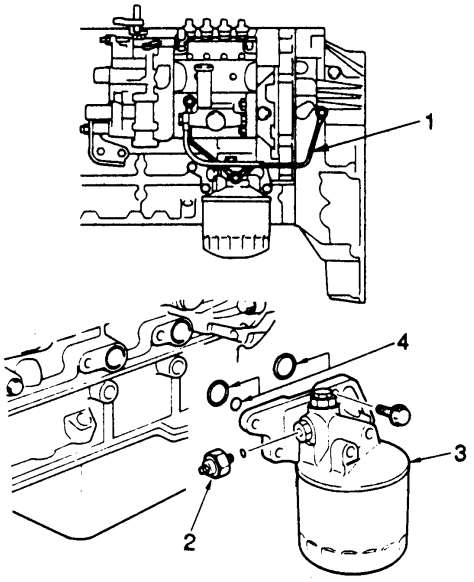

Removal steps
1. Oil pipe
2. Oil pressure switch
3. Oil filter
4. O-ring

Installation steps
To install, follow the removal teps in the reverse order.

6A3-57-1.tif

REMOVAL

Preparation
- Disconnect battery ground cable.
- Place a receptacle beneath the oil filter to contain the drained oil.

1. **Oil Pipe**
2. **Oil Pressure Switch**
3. **Oil Filter Body**
4. **O-ring**

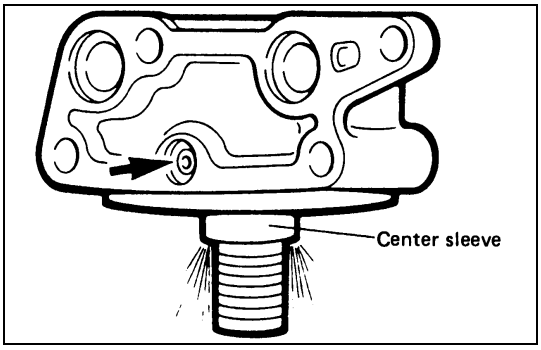

6A3-57-2.tif

INSPECTION

Oil Filter Cover
1. Check the partial filter orifice for any clogging.
2. Send air into the arrow-marked hole in the illustration, and check to see if the air blows out from the small holes in the center sleeve.

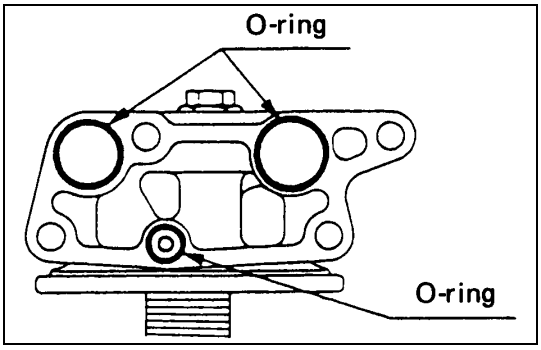

6A3-57-3.tif

INSTALLATION

4. O-Ring

Apply a coat of engine oil to the O-rings and install them to the cylinder body.

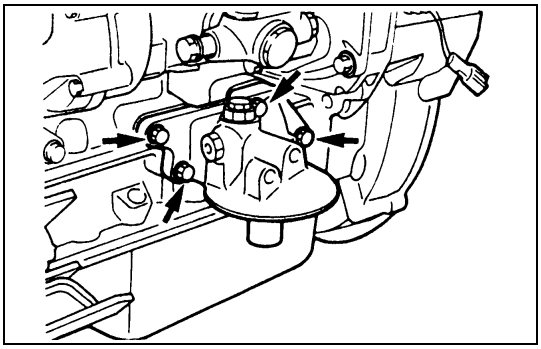

6A3-58-1.tif

3. Oil Filter Body

Oil Filter Cover Bolt Torque	N•m (kg•m/lb•ft)
48 (4.9/35)	

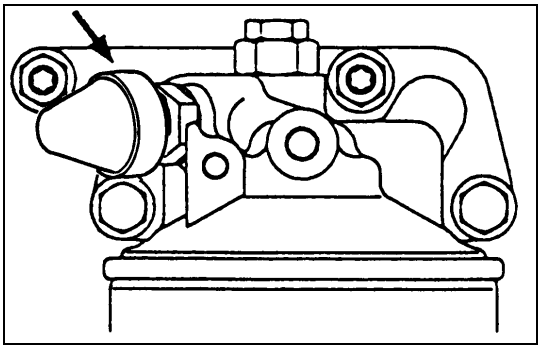

6A3-58-2.tif

2. Oil Pressure Switch

1) Apply the recommended liquid gasket (LOCTITE 262) or its equivalent to at least 2-3 of the oil pressure switch threaded areas.
2) Install the oil pressure switch to the oil filter cover.

Oil Pressure Switch Torque	N•m (kg•m/lb•in)
13 (1.3/113)	

1. Oil Pipe

Oil Pipe Joint Bolt Torque	N•m (kg•m/lb•ft)
17 (1.7/12)	

- Connect battery ground cable.
- Start engine and check for oil leakage carefully.

OIL FILTER CARTRIDGE

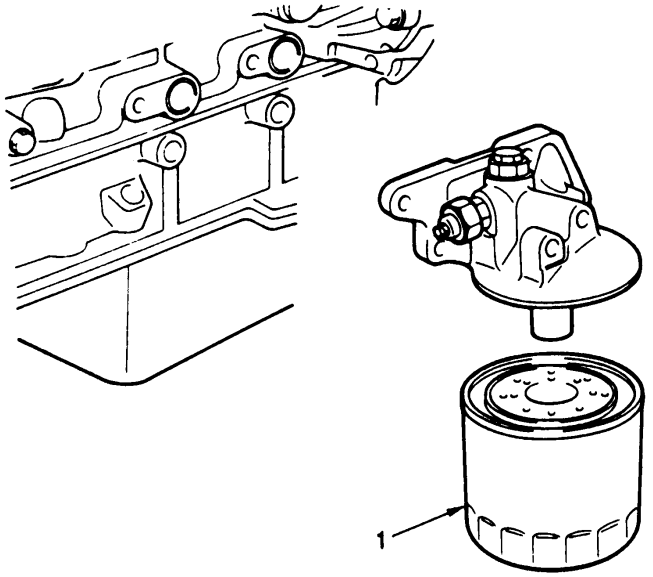

Removal steps
1. Oil filter cartridge

Installation steps
To install, follow the removal steps in the reverse order.

6A3-59-1.tif

REMOVAL

Preparation
- Disconnect battery ground cable.
- Place a receptacle beneath the oil filter to contain the drained oil.

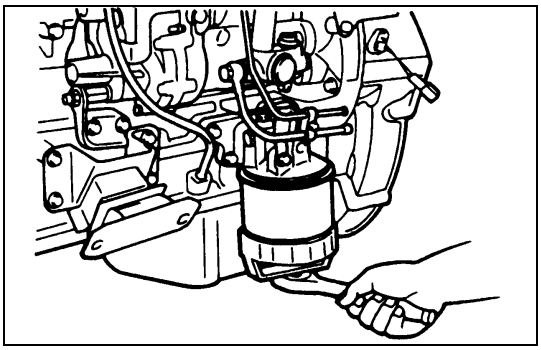

6A3-59-2.tif

1. Oil Filter Cartridge

Use an oil filter wrench to remove the oil filter cartridge.

Oil Filter Wrench: 1-8522-1097-0
5-8840-2094-0 (4WD model)

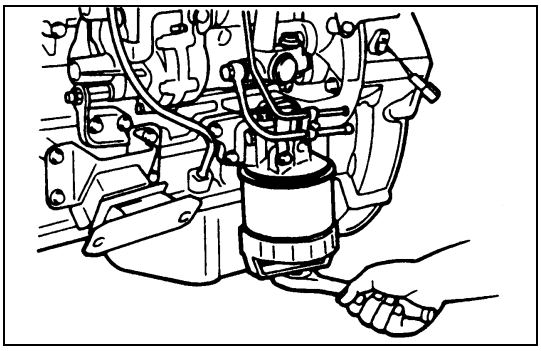

6A3-59-3.tif

INSTALLATION

1. Oil Filter Cartridge

1) Clean the oil filter fitting face.
2) Apply a light coat of engine oil to the O-ring.
3) Turn in the new oil filter until the filter O-ring is fitted against the sealing face.
4) Use an oil filter wrench to install the new oil filter cartridge.

Oil Filter Wrench: 1-8522-1097-0
5-8840-2094-0 (4WD model)

N•m (kg•m/lb•ft)
64 (6.5/47)

OIL COOLER

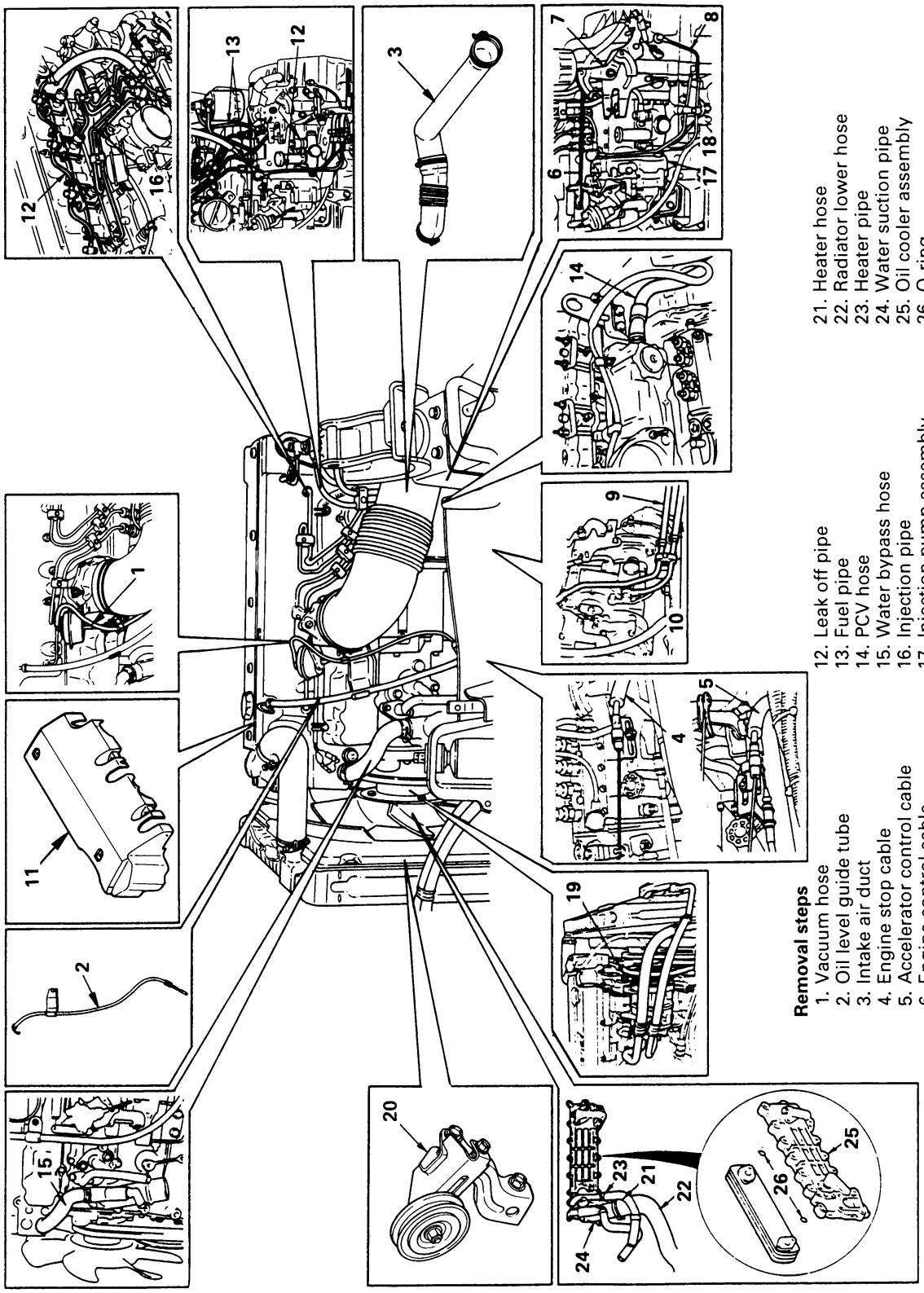

Removal steps
1. Vacuum hose
2. Oil level guide tube
3. Intake air duct
4. Engine stop cable
5. Accelerator control cable
6. Engine control cable
7. Engine control lever assembly
8. Oil pipe
9. Fuel return hose
10. Fuel feed hose
11. Nozzle cover
12. Leak off pipe
13. Fuel pipe
14. PCV hose
15. Water bypass hose
16. Injection pipe
17. Injection pump assembly
18. Injection pump rubber space
19. A/C drive belt (If equipped with A/C)
20. Idle pulley bracket (If equipped with A/C)
21. Heater hose
22. Radiator lower hose
23. Heater pipe
24. Water suction pipe
25. Oil cooler assembly
26. O-ring

Installation steps
To install, follow the removal steps in the reverse order.

6A3-60-1.tif

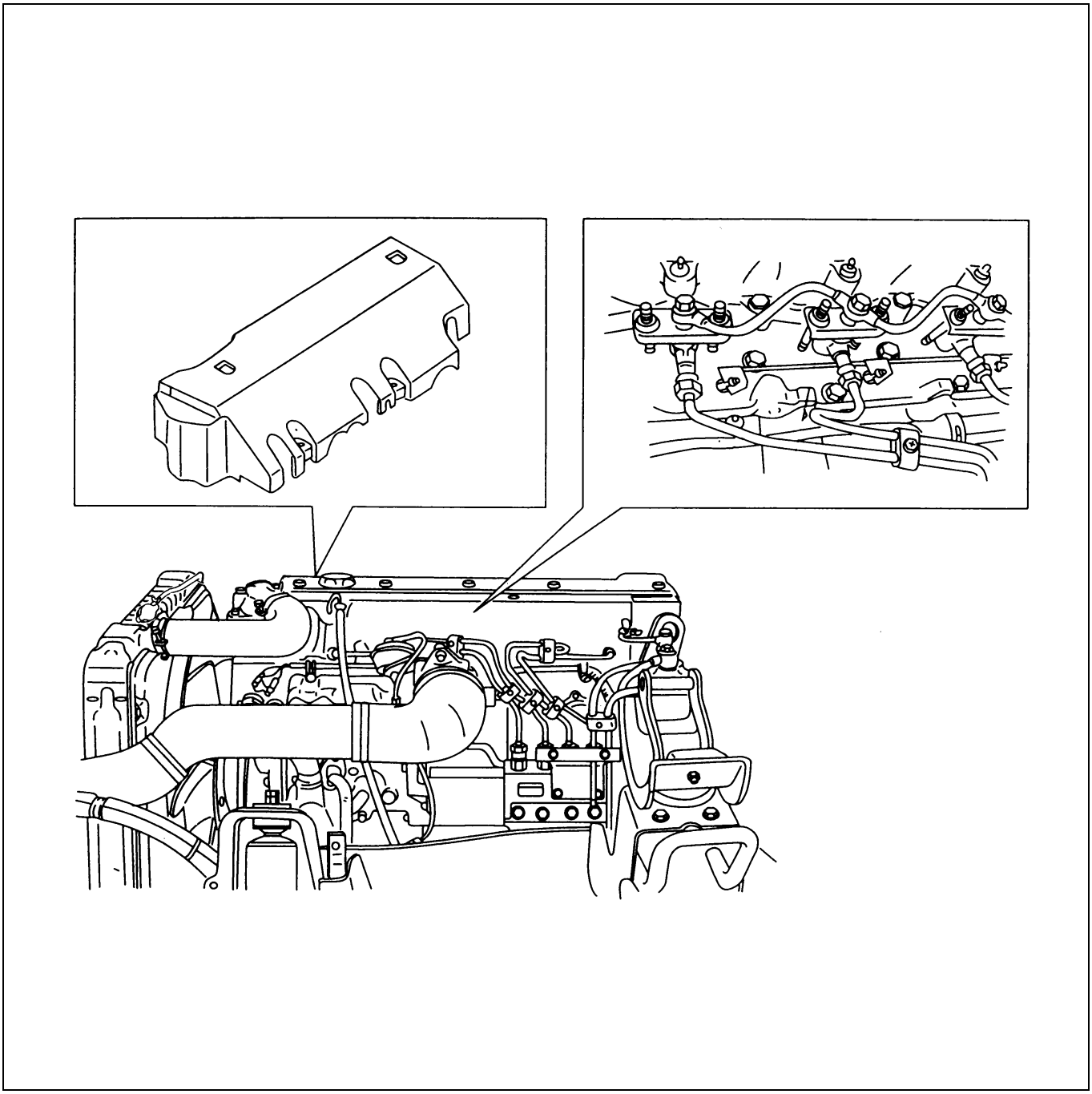

6A3-62-1.tif

REMOVAL

Preparation

- Disconnect the battery ground cable
- Drain coolant

1. **Vacuum Hose**
2. **Oil Level Guide Tube**

   Remove the guide tube fixing bolt and pull out the guide tube.
3. **Intake Air Duct**
4. **Engine Stop Cable**

   Loosen the locking nut at the bracket and disconnect engine stop cable from injection pump stop lever.

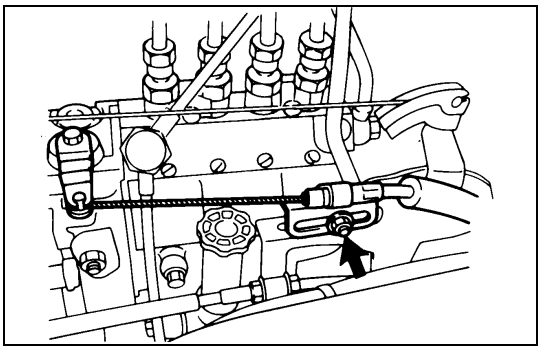

6A3-62-1.tif

5. **Accelerator Control Cable**

   Loosen the locking nut at the bracket and disconnect accelerator control cable from injection pump control lever.

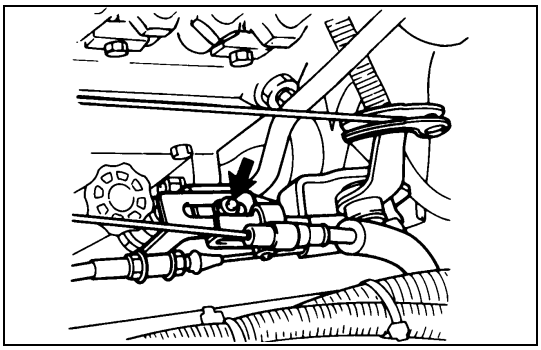

6A3-62-2.tif

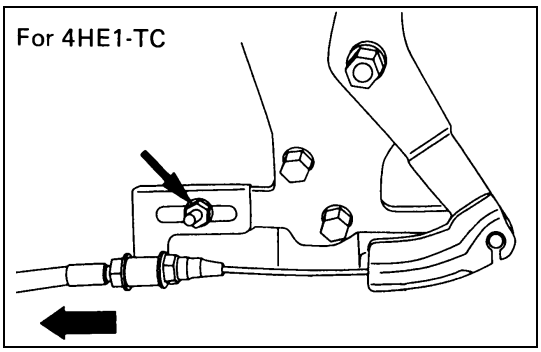

6A3-62-3.tif

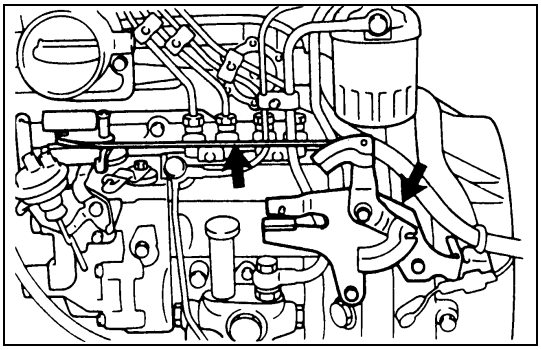

6A3-62-4.tif

6. **Engine Control Cable**
7. **Engine Control Lever**
8. **Oil Pipe**
9. **Fuel Return Hose**
10. **Fuel Feed Hose**

    Disconnect fuel hose from injection pump side and take care not to spill and enter dust.
11. **Nozzle Cover**

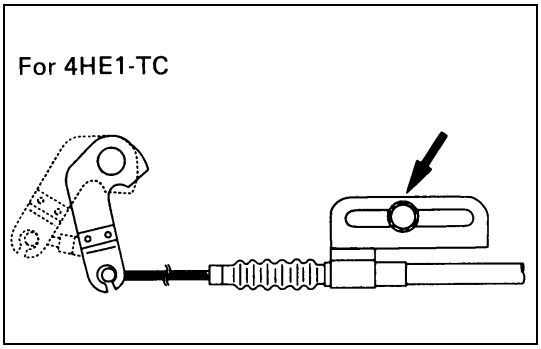

6A3-63-1.tif

12. **Leak Off Pipe**
13. **Fuel Pipe**
14. **Positive Crankcase Ventilation (PCV) Hose**
15. **Water Bypass Hose**
16. **Injection Pipe**
17. **Injection Pump Assembly**
    Above works refer to “INJECTION PUMP ASSEMBLY” section in this manual.
18. **Injection Pump Rubber Spacer (for 4HF1/4HG1T/4HE1-T)**
19. **Air Conditioning (A/C) Drive Belt (If equipped with A/C)**
20. **Idle Pulley Bracket (If equipped with A/C)**
    After removal of the A/C drive belt, remove the 3 bracket fixing bolts. Then, remove the bracket with the tensioner and the idler attached.
21. **Heater Hose**
22. **Radiator Lower Hose**

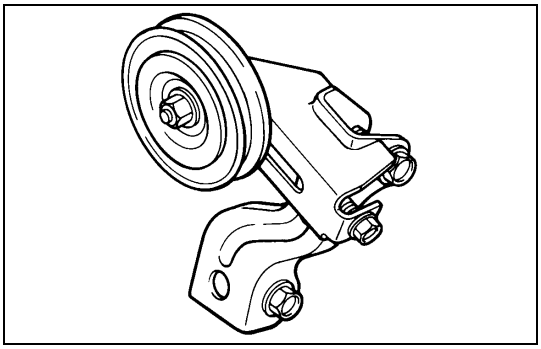

6A3-63-2.tif

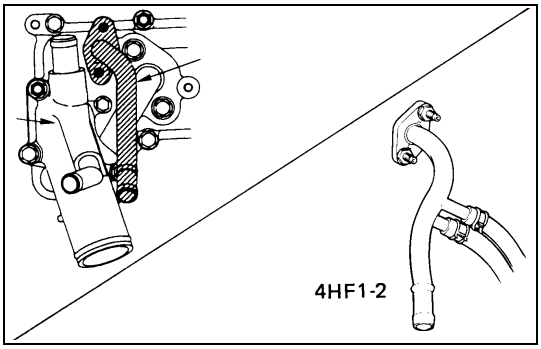

6A3-63-3.tif

23. **Heater Pipe**
24. **Water Suction Pipe**

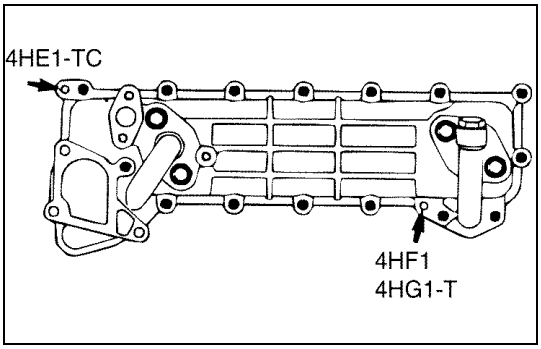

050LX031.tif

25. **Oil Cooler Assembly**
    1) Remove the oil cooler bolts.
    2) Install a oil cooler fixing bolt to the oil cooler replace hole as shown in the illustration, and tighten the bolt alternately a little at a time.
26. **O-Ring**

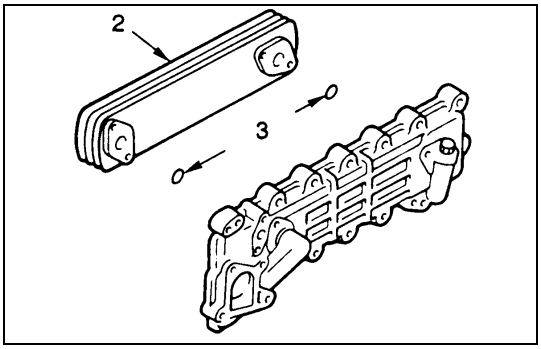

6A3-64-1.tif

DISASSEMBLY

(Oil Cooler Assembly)

1. **Element fixing bolts**
2. **Element**
3. **O-Ring**

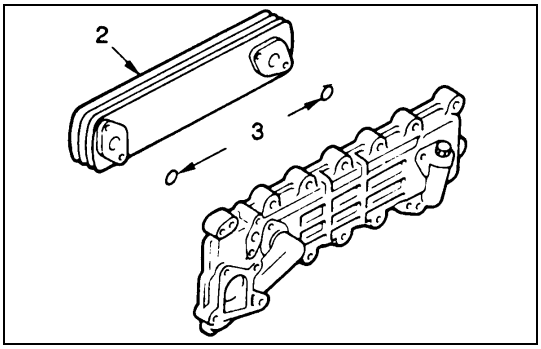

6A3-64-2.tif

REASSEMBLY

3. **O-Ring**

Apply a coat of engine oil to the O-rings and install the O-rings the oil cooler.

2. **Element**
1. **Element fixing bolts**

N•m (kg•m/lb•ft)
20 (2.0/14)

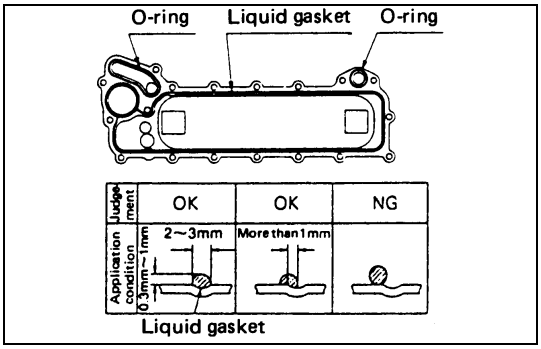

6A3-64-3.tif

INSTALLATION

26. **O-Ring**
25. **Oil Cooler Assembly**
    1) Apply 2mm-3mm (0.08-0.1 in) bead of the recommended liquid gasket (Three Bond 1207C) or its equivalent on the oil cooler fitting surface.
    2) Apply a coat of engine oil to the O-rings (2 pieces) and install the O-rings to the oil cooler.

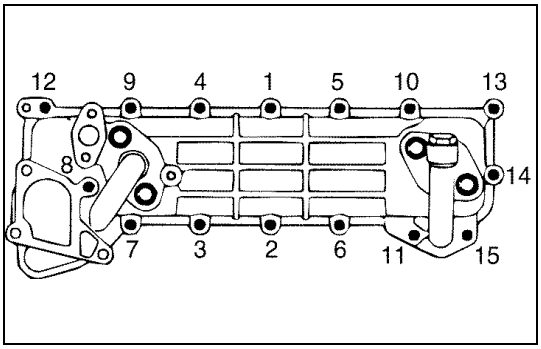

050LX032.tif

NOTE:

Take care that the O-ring is not smeared with liquid gasket.

- Install the oil cooler within 7 minutes after application of liquid gasket.
- For the dislocation of liquid gasket, refer to the illustration.

3) Tighten the oil cooler bolts and nut to the specified torque a little at a time in the sequence shown in the illustration.

Oil Cooler Bolt and Nut Torque	N•m (kg•m/lb•ft)
24 (2.4/17)	

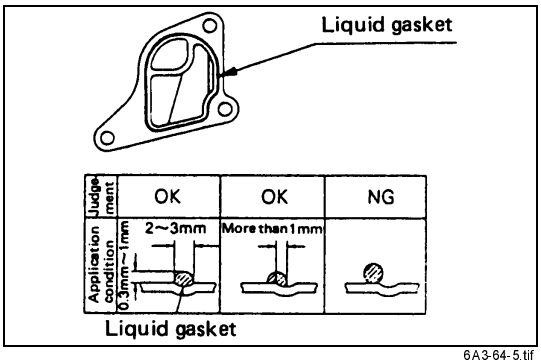

6A3-64-5.tif

24. **Water Suction Pipe**
    1) Apply 2mm-3mm bead of the recommended liquid gasket (Three Bond 1207C) or its equivalent on the groove of the water suction pipe fitting surface.
    2) Install the water suction pipe to the oil cooler.
    - For the dislocation of liquid gasket, refer to the illustration.

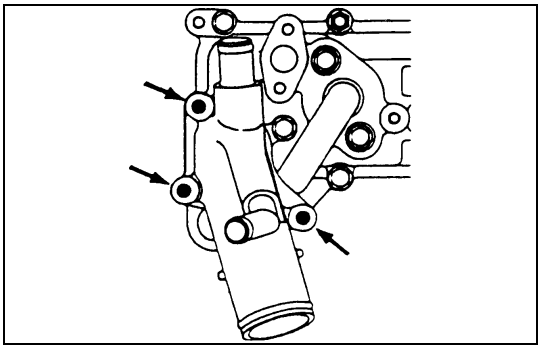

6A3-65-1.tif

Water Suction Pipe Bolt Torque	N•m (kg•m/lb•ft)
24 (2.4/17)	

NOTE:
Install the water suction pipe immediately after the installation of the oil cooler.

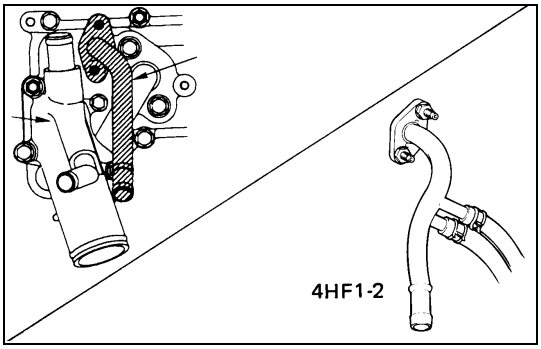

6A3-65-2.tif

23. Heater Pipe

1) Install the O-ring to the heater pipe.
2) Install the heater pipe to the oil cooler.

Heater Pipe Bolt Torque	N•m (kg•m/lb•ft)
24 (2.4/17)	

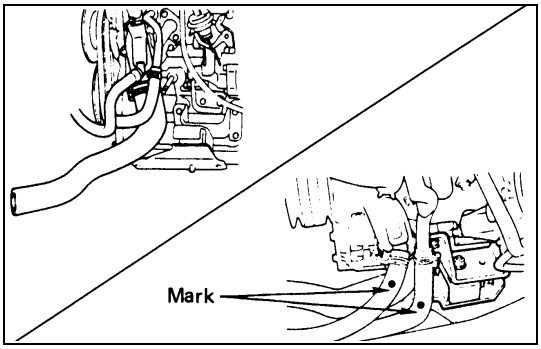

6A3-65-3.tif

22. Radiator Lower Hose

21. Heater Hose

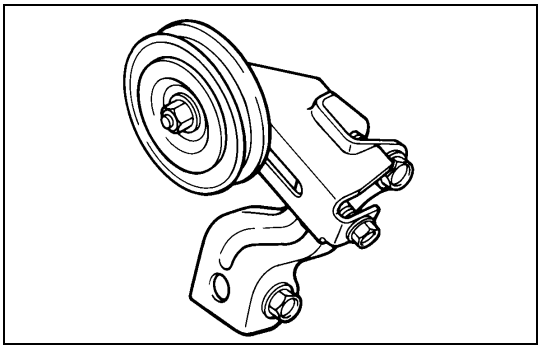

6A3-65-4.tif

20. Idle Pulley Bracket (If equipped with A/C)

Idle Pulley Bracket Bolt Torque	N•m (kg•m/lb•ft)
48 (4.9/35)	

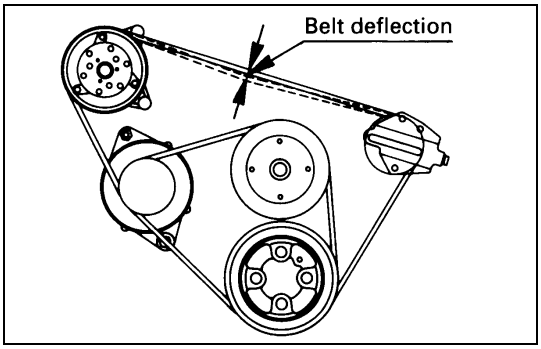

6A3-66-1.tif

19. Air Conditioning (A/C) Drive Belt (If equipped with A/C)

- Install drive belt adjust belt tension by adjusting bolt and tighten locking nut to the specified torque.
- Depress the drive belt mid-portion with a 10kg (22lb/98N) force.

Drive Bolt Deflection	mm (in)
16 - 20 (0.63 - 0.79) .... New belt	
18 - 22 (0.71 - 0.87) .... Reuse belt	

Locking Nut Torque	N•m (kg•m/lb•ft)
27 (2.8/20)	

18. Injection Pump Rubber Spacer (4HF1/4HG1T/4HE1-T)
17. Injection Pump Assembly
16. Injection Pipe
15. Water Bypass Hose
14. Positive Crankcase Ventilation (PCV) Hose
13. Fuel Pipe
12. Leak Off Pipe
11. Nozzle Cover
10. Fuel Feed Hose
9. Fuel Return Hose

Air Bleeding

Above works refer to “INJECTION PUMP ASSEMBLY” section in this manual.

8. Oil Pipe

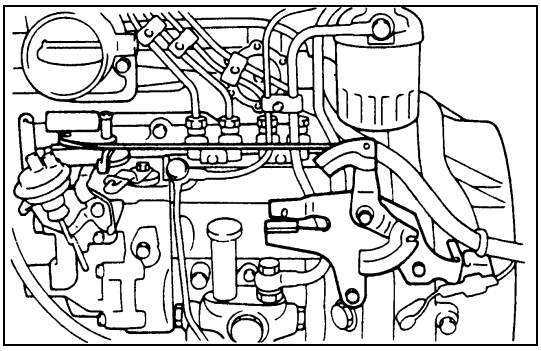

6A3-66-2.tif

7. Engine Control Lever Assembly

Engine Control Lever Bolt Torque	N•m (kg•m/lb•ft)
24 (2.4/17)	

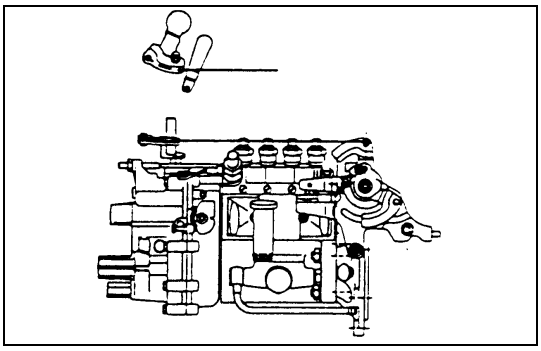

6A3-66-3.tif

6. Engine Control Cable

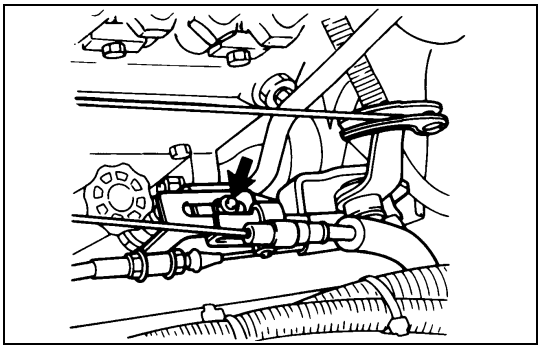

6A3-67-1.tif

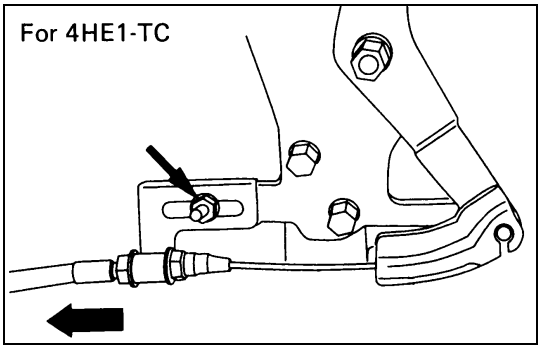

6A3-67-2.tif

5. Accelerator Control Cable

1) Check to see if the idling control knob is turned to the utmost limit to the left.
2) Install the end tip of the cable to the engine control lever.
3) With the outer cable pulled toward the front of the vehicle, provide the engine control wire and the inner cable with the appropriate play. Then, fasten the clamp with a nut.
4) Check to see if the control lever of the injection pump is set at the idling position (with the lever attached to the stopper bolt).

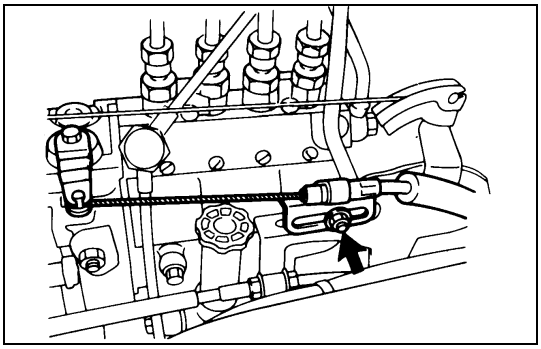

6A3-67-3.tif

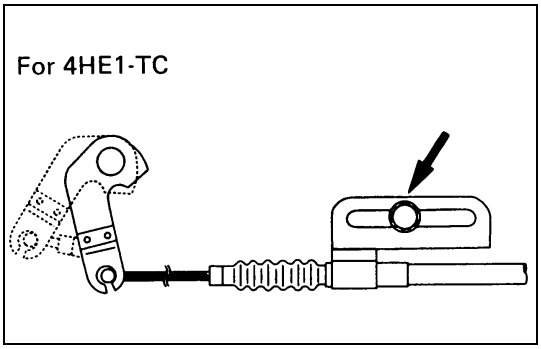

6A3-67-4.tif

4. Engine Stop Cable

1) Install the end tip of the cable to the engine stop lever.
2) Pull the cable toward the rear of the vehicle, and fasten the clamp with a nut at the position where the lever stops.

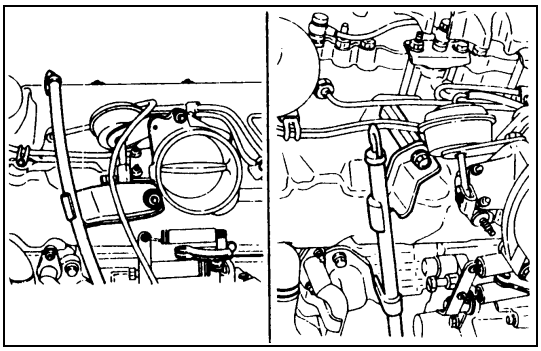

6A3-67-5.tif

3. Intake Air Duct

2. Oil Level Gauge Guide Tube

1) Install the O-rings to the guide tube lower portion and insert the guide tube completely to the cylinder body.
2) Tighten the guide tube bolt to the specified torque.

Guide Tube Bolt Torque	N•m (kg•m/lb•in)
	13 (1.3/113)

1. **Vacuum Hose**
   - Pour coolant into radiator.
   - Connect battery ground cable.
   - Start engine and check for oil and water leakage carefully.

OIL PAN

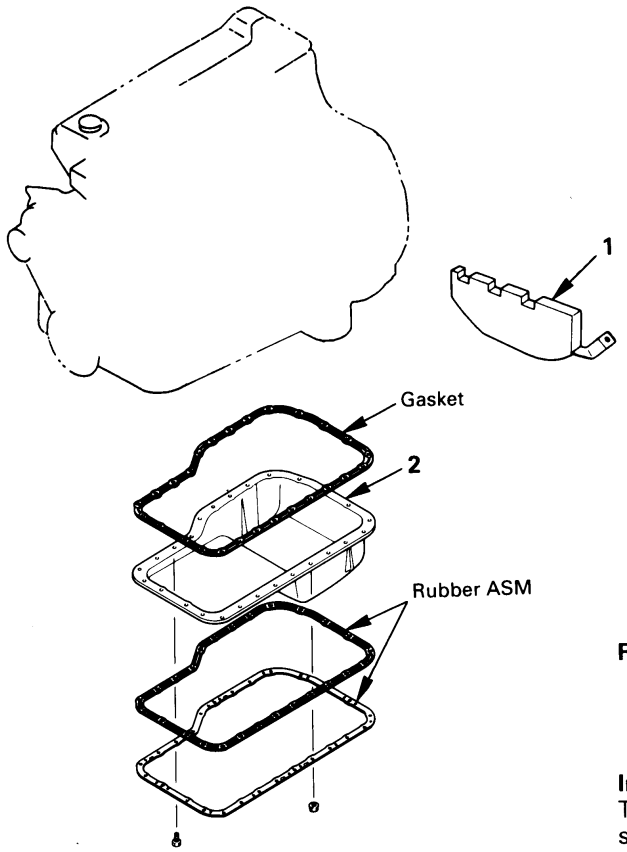

Removal steps
1. Spacer rubber (NKR model only)
2. Oil pan

Installation steps
To install, follow the removal steps in the reverse order.

6A3-69-1.tif

REMOVAL

Preparation

- Disconnect battery ground cable
- Lift up car
- Drain engine oil

1. Spacer Rubber (NKR model only)

- For the 4WD model vehicle, remove the stiffener before removing the spacer rubber.

2. Oil Pan

INSTALLATION

2. Oil Pan

1) Apply a 3mm (0.1 inch) bead of recommended liquid gasket (Three Bond 1207C) or its equivalent to the shaded areas shown in the illustration.

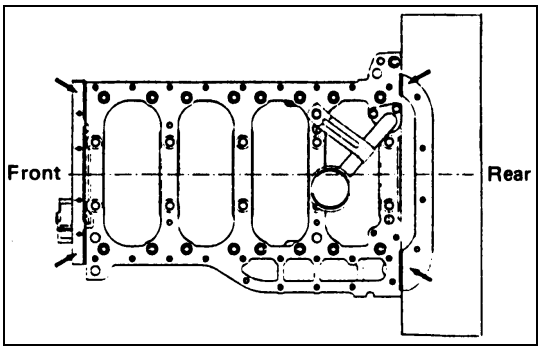

6A3-69-2.tif

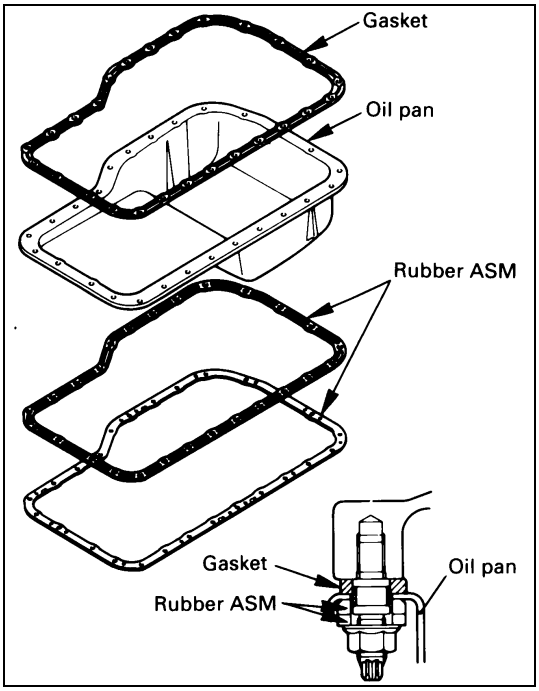

6A3-70-1.tif

Except 4HE1-T, 4HE1-TC

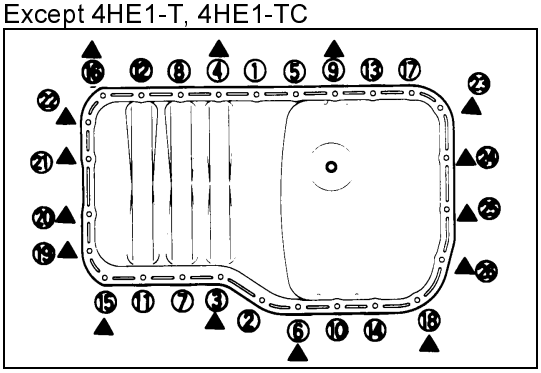

6A3-70-2.tif

For 4HE1-T, 4HE1-TC

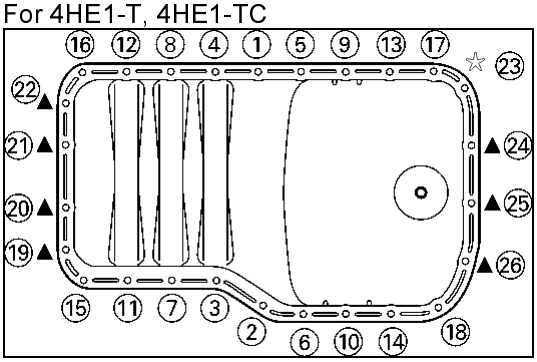

013LX00001.tif

3) Tighten the oil pan nuts and bolts to the specified torque in the numerical order as shown in the illustration.

▲ marks are located on nut positions.

Oil Pan Nuts and Bolts Torque	N•m (kg•m/lb•ft)
Others	11 (1.1/8)
4HE1-T 4HE1-TC	24 (2.4/17) 18 (1.8/13) for star mark

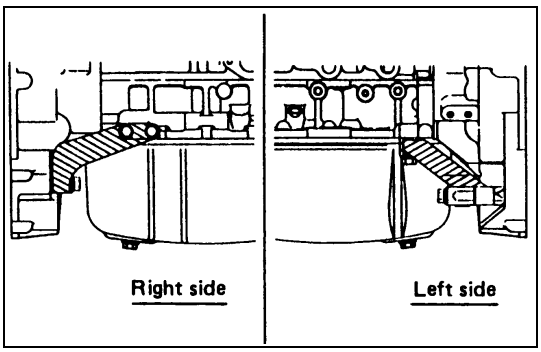

6A3-70-3.tif

1. **Spacer Rubber (NKR model only)**

Spacer Rubber Bolts Torque	N•m (kg•m/lb•ft)
76 (7.7/56)	

- For the 4WD model vehicle, tighten the spacer rubber together with the stiffener.

Cylinder Body RH Side	N•m (kg•m/lb•ft)
48 (4.9/35)	

Cylinder Body LH Side	N•m (kg•m/lb•ft)
128 (12.9/93)	

Flywheel Housing Side	N•m (kg•m/lb•ft)
76 (7.7/56)	

- Pour engine oil into engine
- Connect battery ground cable
- Start engine and check for oil leakage from oil pan.

OIL PUMP ASSEMBLY

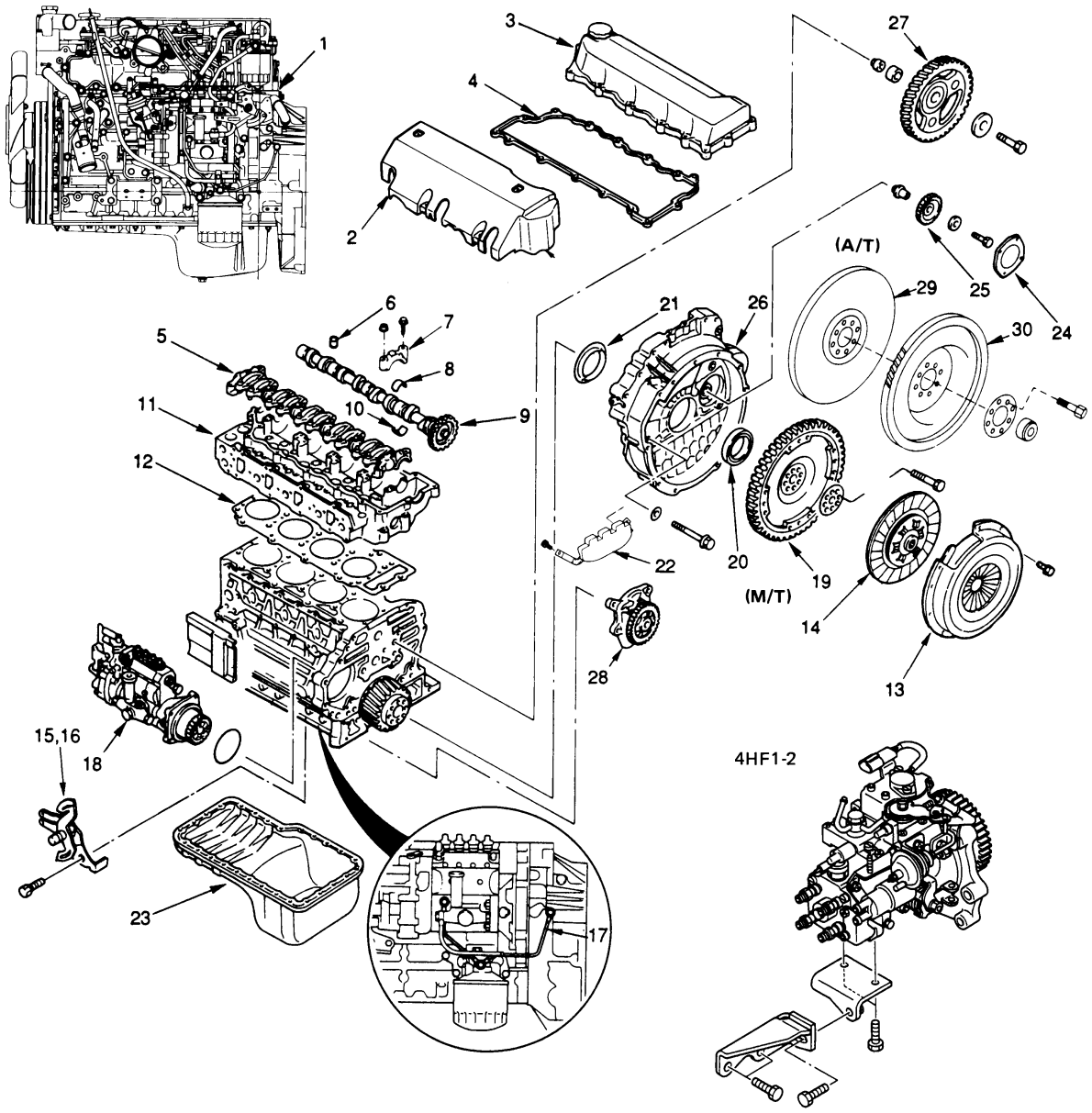

Removal steps

1. Engine assembly
2. Nozzle cover
3. Cylinder head cover
4. Head cover gasket
5. Rocker arm shaft assembly
6. Valve cap
7. Camshaft bearing cap
8. Camshaft bearing upper
9. Camshaft assembly
10. Camshaft bearing lower
11. Cylinder head assembly
12. Cylinder head gasket
13. Clutch pressure plate assembly
14. Driven plate
15. Engine control wire
16. Engine control lever assembly
17. Oil pipe
18. Injection pump assembly
19. **Flywheel** (M/T)
20. **Rear oil seal**
21. **Slinger**
22. Spacer rubber (NKR model only)
23. Oil pan
24. Power steering pump idle gear cover
25. Power steering pump idle gear
26. Flywheel housing
27. Idle gear A
28. Oil pump assembly
29. Flywheel (A/T)
30. Flexible plate (A/T)

Installation steps

To install, follow the removal steps in the reverse order.

6A3-71-1.tif

REMOVAL

Preparation

- Disconnect battery ground cable.
- Tilt the cab.
- Drain coolant and engine oil

1. **Engine Assembly**

   Above works refer to "ENGINE ASSEMBLY" section in this manual.
2. **Nozzle Cover**
3. **Cylinder Head Cover**
4. **Head Cover Gasket**
5. **Rocker Arm Shaft Assembly**
6. **Valve Cap**
7. **Camshaft Bearing Cap**
8. **Camshaft Bearing Upper**
9. **Camshaft Assembly**
10. **Camshaft Bearing Lower**

    Above works refer to "ROCKER ARM SHAFT ASSEMBLY AND CAMSHAFT ASSEMBLY" section in this manual.
11. **Cylinder Head Assembly**

    Above works refer to "CYLINDER HEAD" section in this manual.

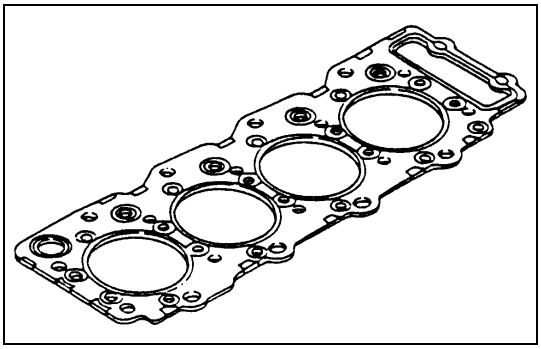

6A3-72-1.tif

12. **Cylinder Head Gasket**

    CAUTION:

    Do not reuse the cylinder head gasket.

13. **Clutch Pressure Plate Assembly**
14. **Driven Plate**

    Above works refer to "TIMING GEAR REPLACEMENT" section in this manual.
15. **Engine Control Wire**
16. **Engine Control Lever Assembly**
17. **Oil Pipe**

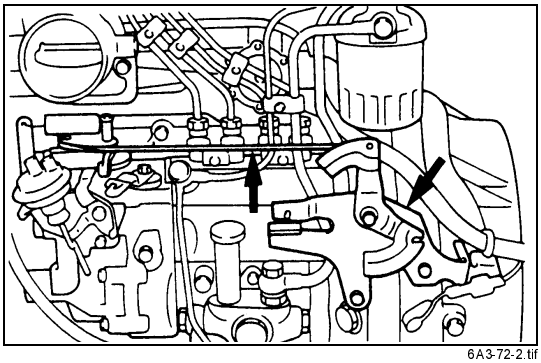

6A3-72-2.tif

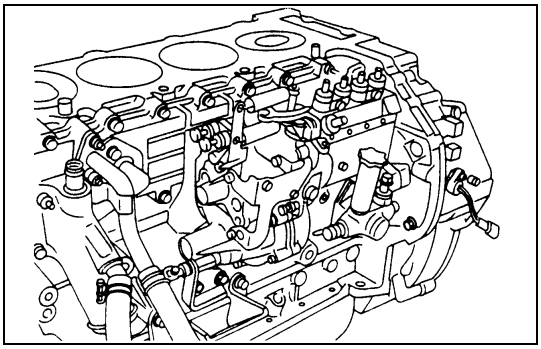

6A3-73-1.tif

18. Injection Pump Assembly

1) Remove the injection pump bracket bolts and the injection pump rear bracket bolts.
2) Then remove the injection pump assembly.

19. Flywheel Assembly

20. Crankshaft Rear Oil Seal

21. Crankshaft Rear Slinger

Above works refer to “CRANKSHAFT REAR OIL SEAL” section in this manual.

22. Spacer Rubber (NKR model only)

For the 4WD model vehicle, remove the stiffener before removing the spacer rubber.

23. Oil Pan

24. Power Steering Pump Idle Gear Cover

25. Power Steering Pump Idle Gear

26. Flywheel Housing

NOTE:

Be careful not to fail to remove the bolts shown in the illustration.

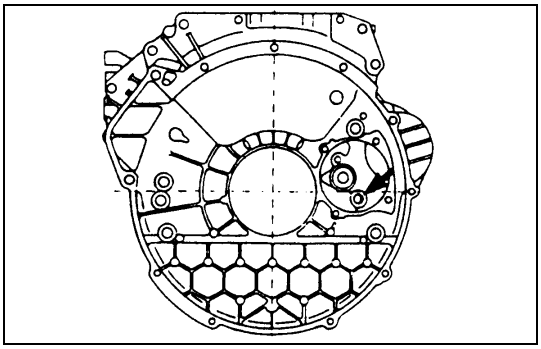

6A3-73-2.tif

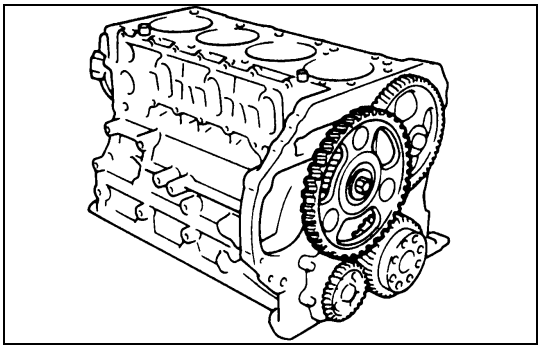

6A3-73-3.tif

27. Idle Gear A

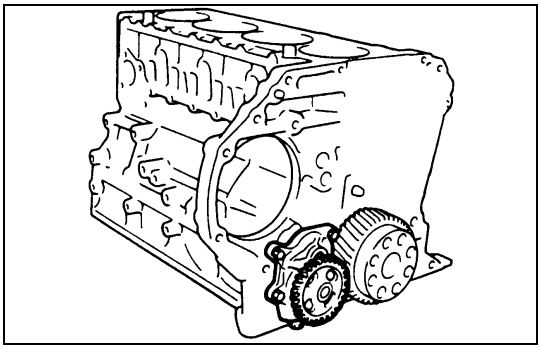

6A3-74-1.tif

28. Oil Pump Assembly

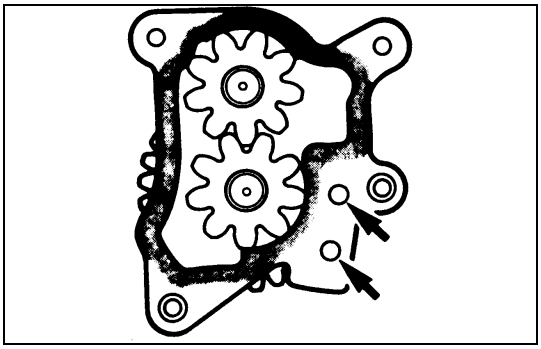

6A3-74-2.tif

INSTALLATION

28. Oil Pump Assembly

1) Carefully wipe any foreign material from the cylinder body rear surface.
2) Apply the recommended liquid gasket (Three Bond 1141E) or its equivalent to the shaded areas shown in the illustration.

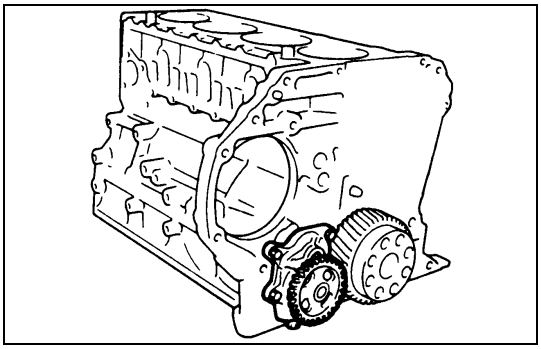

6A3-74-3.tif

CAUTION:

Be careful that no liquid gasket gets into the holes in the arrow-marked portion in the illustration and the inside of the oil pump cover.

3) Install the oil pump to the cylinder body.
4) Tighten the oil pump to the specified torque.

Oil Pump Bolt Torque	N•m (kg•m/lb•ft)
31 (3.2/23)	

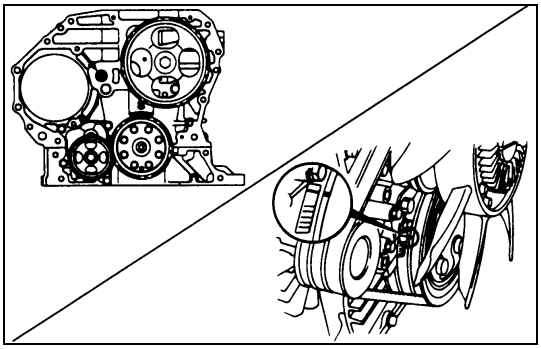

6A3-74-4.tif

27. Idle Gear A

1) Turn the crankshaft clockwise so that the engagement mark of the crankshaft gear faces to the shaft center of the idle gear A and the No.1 cylinder piston comes to the top dead center.
2) Align the crankshaft gear with the engagement mark of the idle gear and install the idle gear A.

Idle Gear A Bolt Torque	N•m (kg•m/lb•ft)
133 (13.6/98)	

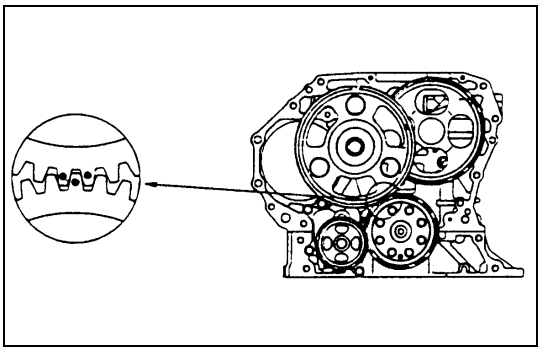

6A3-74-5.tif

26. **Flywheel Housing**
25. **Power Steering Pump Idle Gear**
24. **Power Steering Pump Idle Gear Cover**
    Above works refer to “TIMING GEAR REPLACEMENT” section in this manual.
23. **Oil Pan**
22. **Spacer Rubber(NKR mode)**
    Above works refer to “OIL PAN” section in this manual.
21. **Crankshaft Rear Slinger**
20. **Crankshaft Rear Oil Seal**
19. **Flywheel Assembly**
    Above works refer to “CRANKSHAFT REAR OIL SEAL” section in this manual.
18. **Injection Pump Assembly**
    Above works refer to “INJECTION PUMP ASSEMBLY” section in this manual.
17. **Oil Pipe**
16. **Engine Control Lever Assembly**
15. **Engine Control Wire**
    Above works refer to “INJECTION PUMP ASSEMBLY” section in this manual.
14. **Driven Plate**
13. **Clutch Pressure Plate Assembly (M/T) or Flexible Plate (A/T)**
    Above works refer to “TIMING GEAR REPLACEMENT” section in this manual.
12. **Cylinder Head Gasket**
    Above works refer to “CYLINDER HEAD” section in this manual.
11. **Cylinder Head Assembly**
    Above works refer to “CYLINDER HEAD” section in this manual.
10. **Camshaft Bearing Lower**
9. **Camshaft Assembly**
8. **Camshaft Bearing Upper**
7. **Camshaft Bearing Cap**
6. **Valve Cap**
    Above works refer to “CAMSHAFT ASSEMBLY” section in this manual.
5. **Rocker Arm Shaft Assembly**
    Above works refer to “ROCKER ARM SHAFT ASSEMBLY” section in this manual.
4. **Head Cover Gasket**
3. **Cylinder Head Cover**
    Above works refer to “CYLINDER HEAD COVER” section in this manual.
2. **Nozzle Cover**
1. **Engine Assembly**
    Above works refer to “ENGINE ASSEMBLY” section in this manual.

OIL RELIEF VALVE

REMOVAL

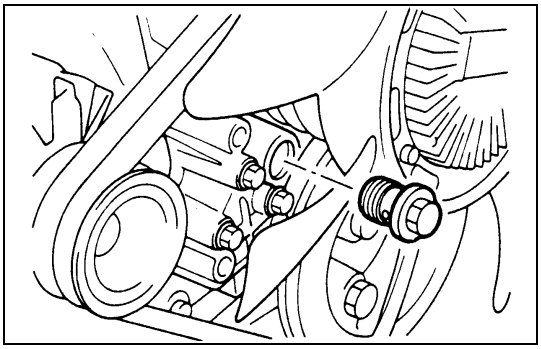

6A3-76-1.tif

1. **Oil Relief Valve**

INSPECTION AND REPAIR

Make the necessary adjustments, repairs, and part replacements if excessive wear or damage is discovered during inspection.

Valve

Push the valve with a screwdriver to check it for binding.

When the valve is binding, replace the relief valve with a new one.

Spring

Blow the valve and check it for air leak. When there is any air leak in the valve, replace it with a new one.

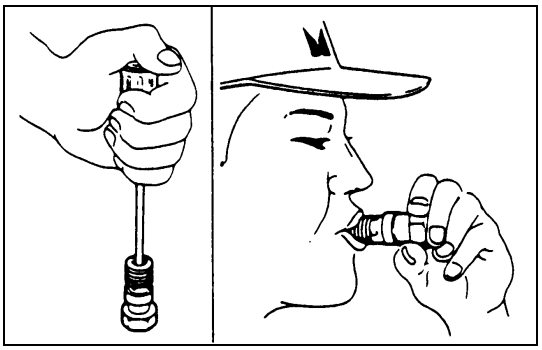

6A3-76-2.tif

INSTALLATION

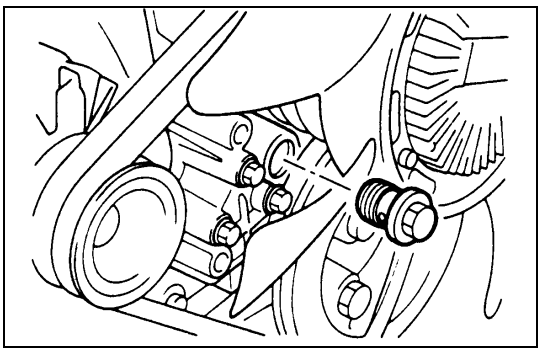

6A3-76-3.tif

1. **Oil Relief Valve**

Oil Relief Valve Torque	N•m (kg•m/lb•ft)
39 (4.0/29)	

PISTON, PISTON RING, PISTON PIN AND CONNECTING ROD

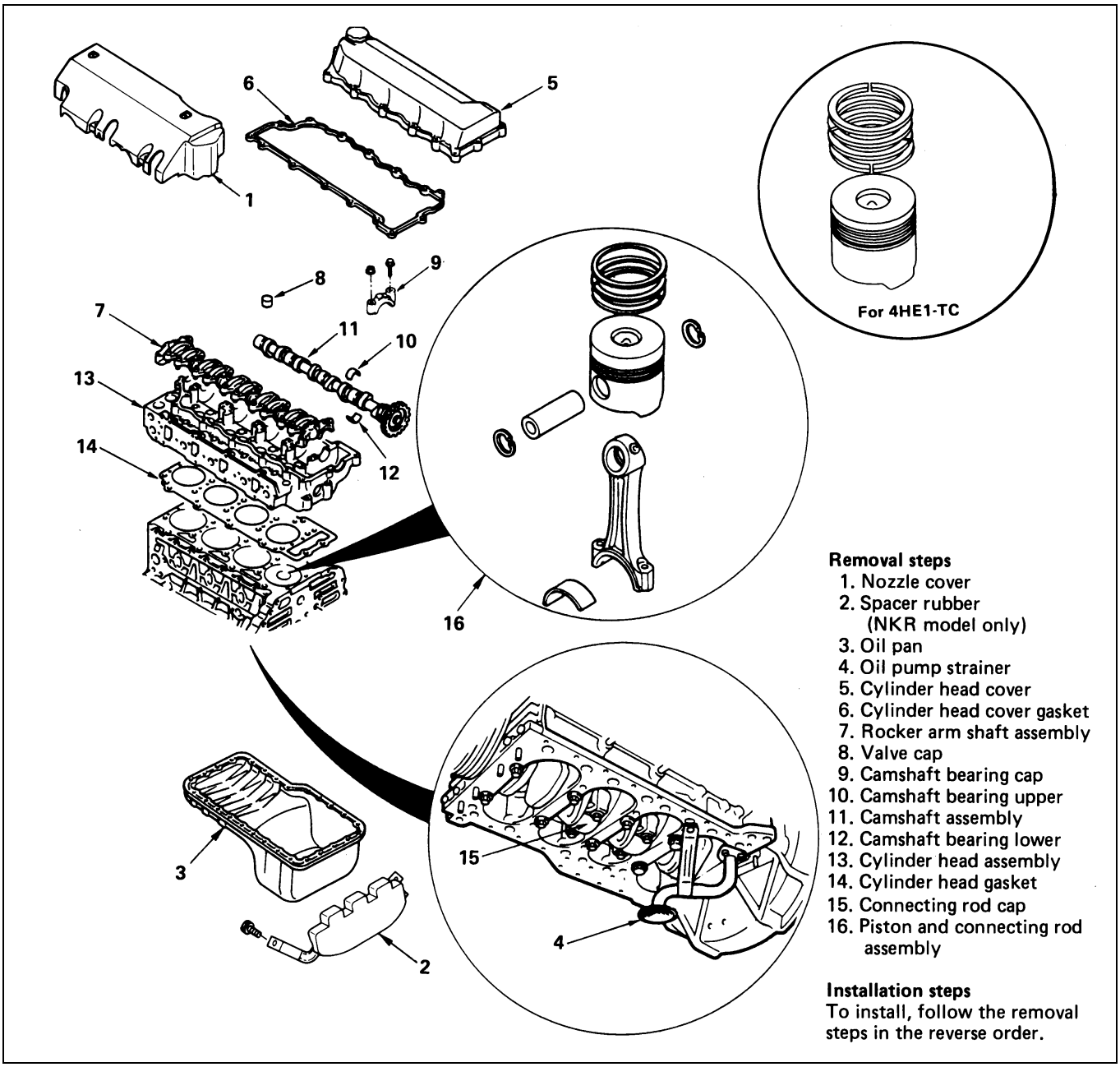

6A3-77-1.tif

REMOVAL

Preparation

- Disconnect battery ground cable.
- Tilt the cab.
- Drain coolant and engine oil.

1. Nozzle Cover

2. Spacer Rubber (NKR model only)

For the 4WD model vehicle, remove the stiffener before removing the spacer rubber.

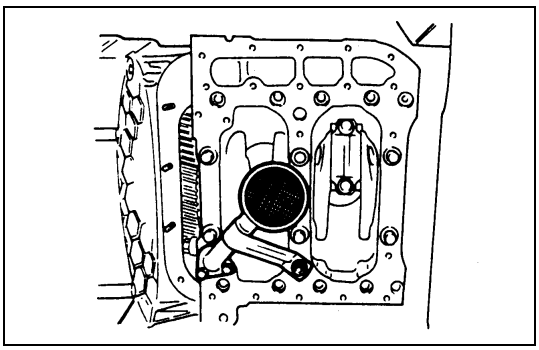

6A3-78-1.tif

3. **Oil Pan**
4. **Oil Pump Strainer**
5. **Cylinder Head Cover**
6. **Cylinder Head Cover Gasket**

7. **Rocker Arm Shaft Assembly**
   Above works refer to “ROCKER ARM SHAFT ASSEMBLY” section in this manual.
8. **Valve Cap**

   CAUTION:
   Take sufficient care not to let valve caps fall into the gear case or oil return hole.
9. **Camshaft Bearing Cap**
10. **Camshaft Bearing Upper**
11. **Camshaft Assembly**
12. **Camshaft Bearing Lower**
    Above works refer to “CAMSHAFT ASSEMBLY” section in this manual.
13. **Cylinder Head Assembly**
    Above works refer to “CYLINDER HEAD” section in this manual.

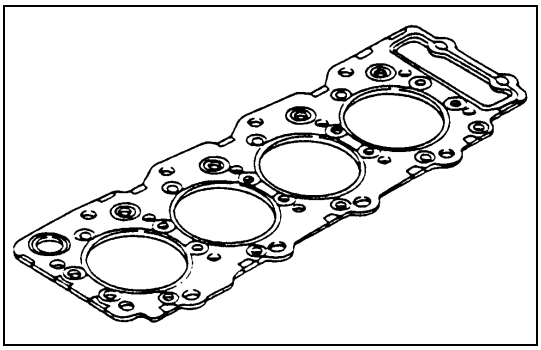

6A3-78-2.tif

14. **Cylinder Head Gasket**

    CAUTION:
    Do not reuse the cylinder head gasket.

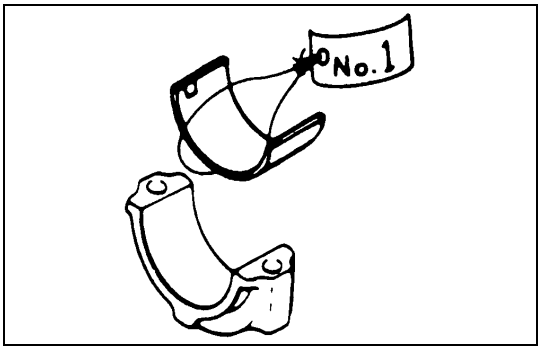

6A3-78-3.tif

15. **Connecting Rod Cap**
    1) Take out the connecting rod bearing cap bolts and remove the bearing cap with the lower bearing.
    2) If the connecting rod lower bearings are to be reinstalled, mark their fitting positions by tagging each bearing with the cylinder number from which it was removed.

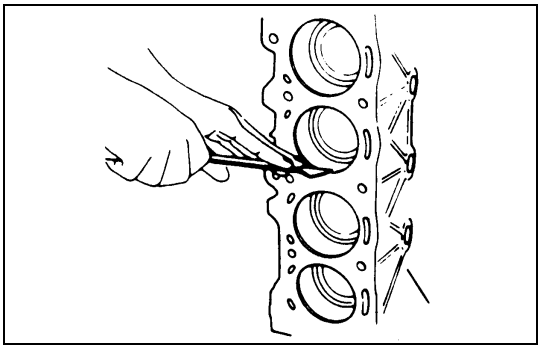

6A3-79-1.tif

16. Piston and Connecting Rod Assembly

1) To facilitate smooth removal of piston, remove carbon from the upper part of the cylinder wall using a scraper or equivalent.
2) Remove the piston and connecting rod assembly upward by pushing on the edge of the connecting rod with a hammer handle or equivalent.
3) If the connecting rod bearing are to be reinstalled, mark their fitting positions by tagging each bearing with the cylinder number from which it was removed.

CAUTION:

Do not bend or damage the oiling jet.

NOTE:

When removing the piston and connecting rod assembly, pull the connecting rod in parallel with the cylinder bore.

INSTALLATION

16. Piston and Connecting Rod Assembly

NOTE:

When installing new connecting rod and/or connecting rod bearings, refer to the selection table. Above works refer to "CRANKSHAFT" section 6A in this manual.

1) Apply a coat of engine oil to the circumference of each piston ring and piston.
2) Position the piston ring gaps as shown in the illustration.

① 1st compression ring
② 2nd compression ring
③ 3rd compression ring (4HE1-TC only)
④ Oil ring
⑤ Coil expander

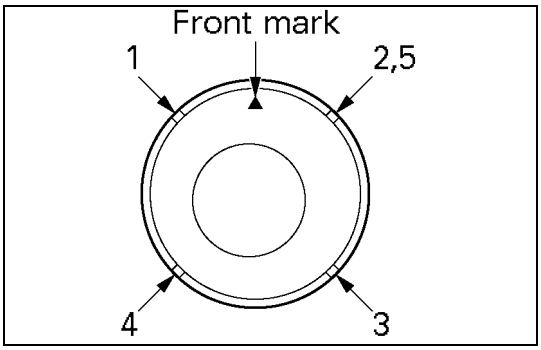

012HW002.tif

3) Apply a coat of molybdenum disulfide grease to the two piston skirts.
   This will facilitate smooth break-in when the engine is first started after reassembly.
4) Apply a coat of engine oil to the upper bearing surfaces.
5) Apply a coat of engine oil to the cylinder wall.
6) Position the piston head front mark so that it is facing the front of the engine.

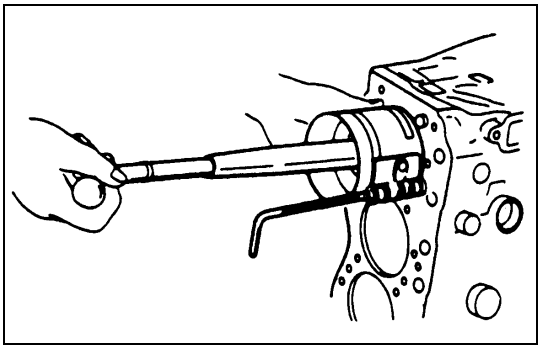

6A3-80-1.tif

7) Use the piston ring compressor to compress the piston rings.

   Piston Ring Compressor: 5-8840-9018-0

8) Use a hammer grip to push the piston in until the connecting rod makes contact with the crankpin.

   At the same time, rotate the crankshaft until the crankpin is at bottom dead center.

CAUTION:

Do not bend or damage the oiling jet.

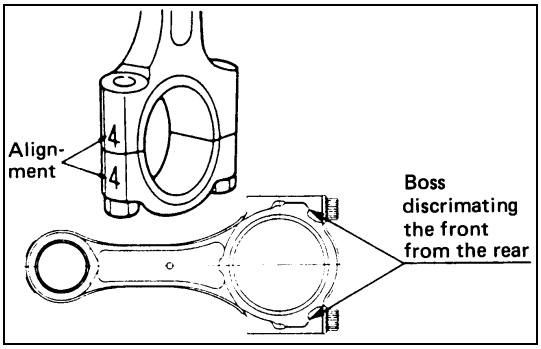

6A3-80-2.tif

15. Connecting Rod Cap

1) Install the connecting rod bearing caps.
2) Align the bearing cap cylinder number marks and the connecting rod cylinder number marks.
3) Apply a coat of molybdenum disulfide grease to the threads and setting faces of each connecting rod cap bolts.

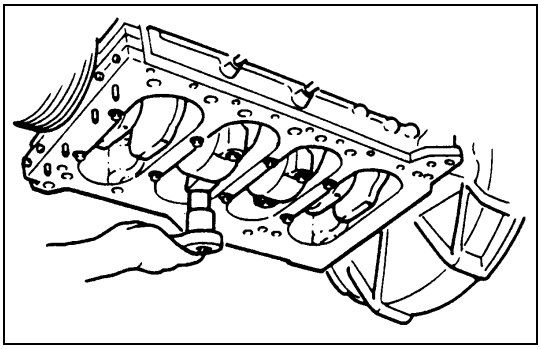

6A3-80-3.tif

4) Tighten the connecting rod caps to the specified torque.

Connecting Rod Bearing Cap

Bolt Torque N•m (kg•m/lb•ft)

1st step	2nd step	3rd step
39 (4.0/29)	60°	30°

Angle gauge : 5-8840-0266-0

14. Cylinder Head Gasket

Above works refer to “CYLINDER HEAD” section in this manual.

13. Cylinder Head Assembly

Above works refer to “CYLINDER HEAD” section in this manual.

12. Camshaft Bearing Lower

11. Camshaft Assembly

10. Camshaft Bearing Upper

9. Camshaft Bearing Cap

8. Valve Cap

Above works refer to “CAMSHAFT ASSEMBLY” section in this manual.

7. Rocker Arm Shaft Assembly

Above works refer to “ROCKER ARM SHAFT ASSEMBLY” section in this manual.

6. Cylinder Head Gasket

Above works refer to “CYLINDER HEAD” section in this manual.

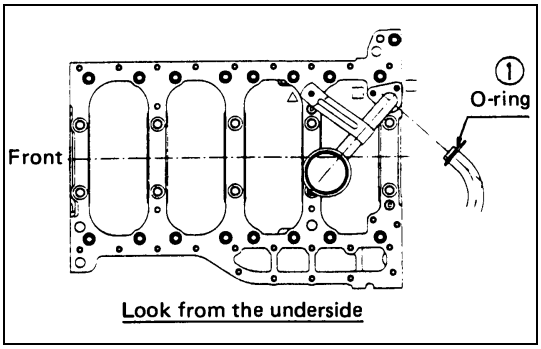

6A3-81-1.tif

5. **Cylinder Head Cover**
   Above works refer to “CYLINDER HEAD COVER” section in this manual.

4. **Oil Pump Strainer**
   Install the O-ring ① to the oil pump strainer pipe and install the oil pump strainer to the cylinder body shown in the illustration.

Oil Pump Strainer Bolt Torque	N•m (kg•.m/lb•ft)
24 (2.4/17)	

3. **Oil Pan**
2. **Spacer Rubber (NKR model only)**
   Above works refer to “OIL PAN” section in this manual.
1. **Nozzle Cover**
   - Pour engine oil and coolant into engine
   - Connect battery ground cable
   - Start engine and check for coolant and oil leakage

FLYWHEEL AND PILOT BEARING

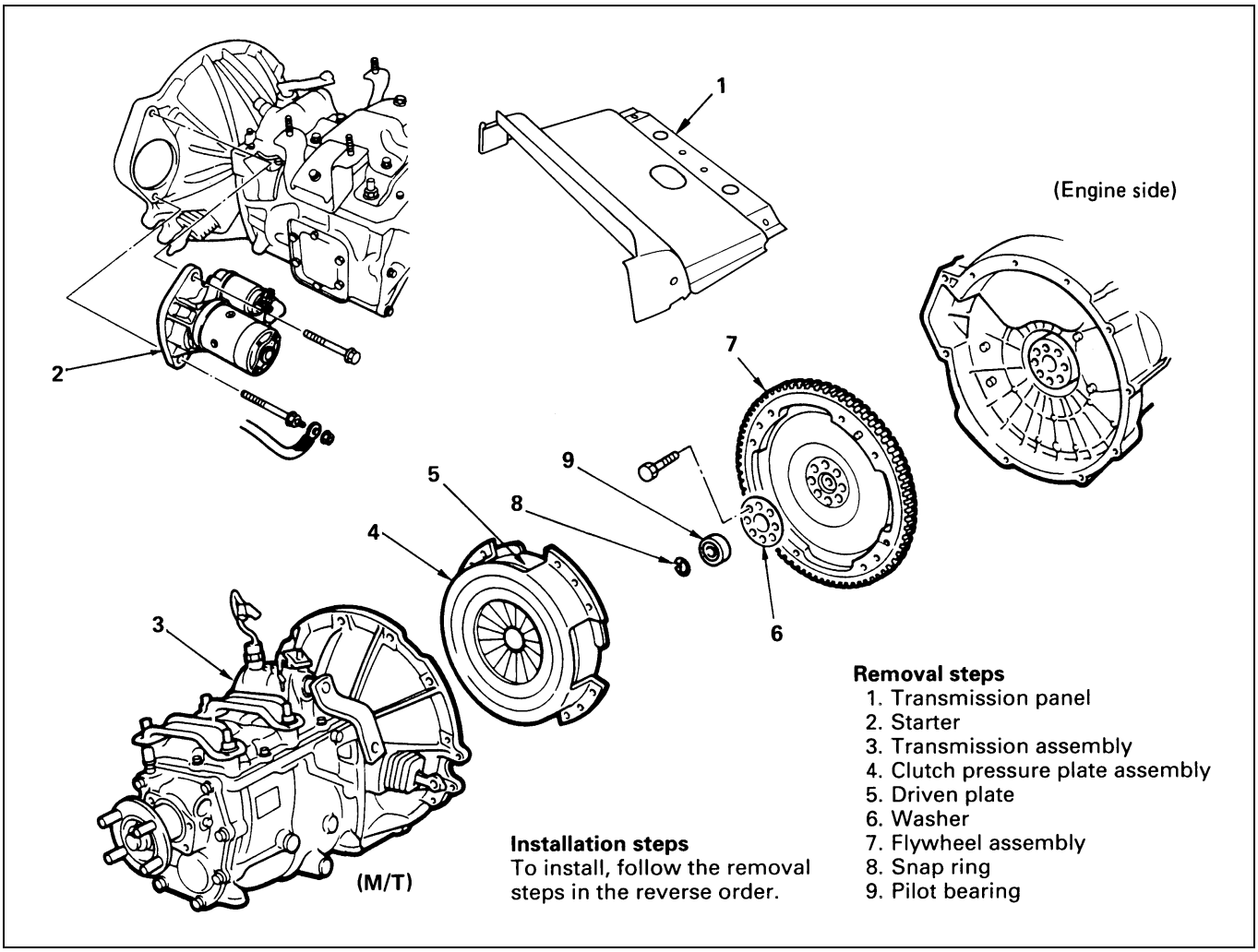

6A3-82-1.tif

REMOVAL

Preparation

- Disconnect battery ground cable.

1. Transmission Panel (M/T model only)

2. Starter

1) Disconnect the battery cable at the starter motor.
2) Remove the starter assembly from flywheel housing.

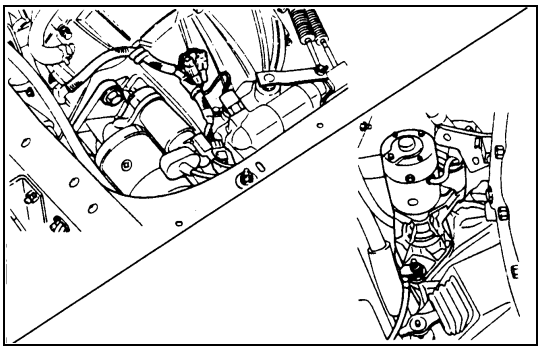

6A3-82-2.tif

3. Transmission Assembly

Above works refer to “ENGINE ASSEMBLY” section in this manual.

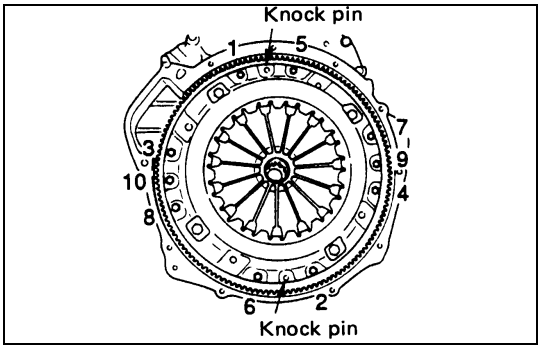

6A3-83-1.tif

4. Clutch Pressure Plate Assembly

1) Insert the clutch pilot aligner to the clutch assembly.
   Clutch Pilot Aligner: 5-8840-2240-0
2) Loosen the pressure plate bolts in numerical order a little at a time as shown in the illustration.
3) Remove the pressure plate assembly.

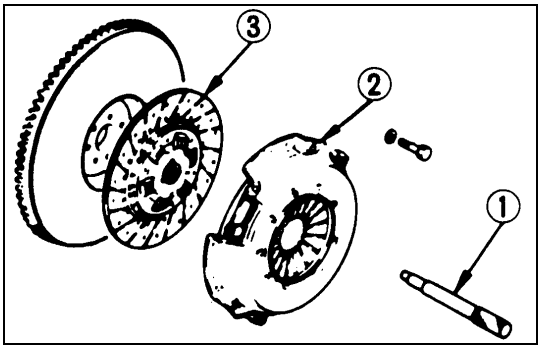

6A3-83-2.tif

5. Driven Plate

Remove the driven plate with the clutch pilot aligner.

① Clutch pilot aligner
② Clutch pressure plate assembly
③ Driven plate

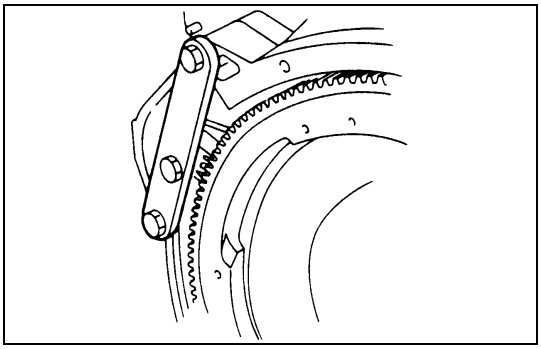

6A3-83-3.tif

6. Washer

7. Flywheel

1) Use the crankshaft stopper to prevent the crankshaft from turning.
   Crankshaft Stopper: 5-8840-2230-0
2) Loosen the flywheel bolts in numerical order a little at a time as shown in the illustration.
3) Remove the flywheel stopper and the flywheel assembly.

For the A/T vehicle, loosen first the flywheel fixing bolt, and then remove the washer, the flexible plate, the flywheel and the sleeve in this order.

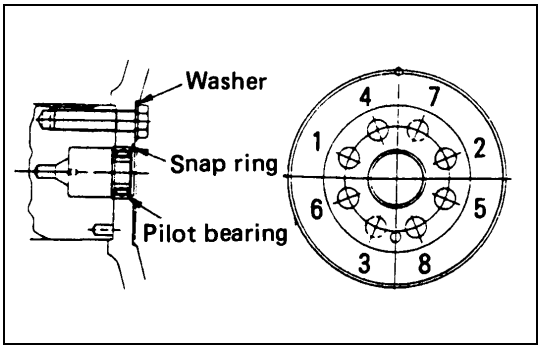

6A3-83-4.tif

8. Snap Ring

Use a snap ring pliers to remove the snap ring from the flywheel.

9. Pilot Bearing

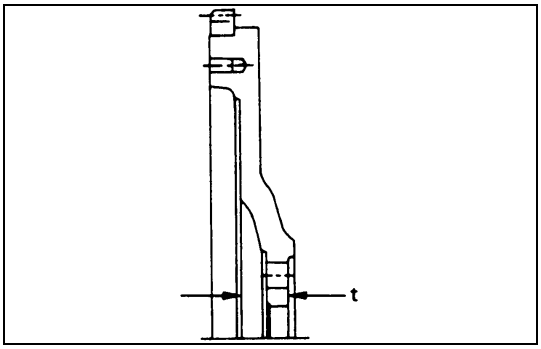

6A3-84-1.tif

INSPECTION AND REPAIR

Flywheel

1) Inspect the flywheel friction surface for excessive wear and heat cracks.
2) Measure the flywheel thickness (t) between the flywheel friction surface and crankshaft setting face.

   If the measured value is between the standard and the specified limit, the flywheel may be reground.

   If the measured value exceeds the specified limit, the flywheel must be replaced.

Flywheel Thickness (t) mm (in)

Engine model	Standard	Limit
Others	31.4 - 31.6 (1.236 -1 .244)	31.0 (1.220)
4HE1-T, 4HG1-TC	37.4 - 37.6 (1.472 -1.480)	37.0 (1.457)

Flywheel Friction Surface Roughness mm (in)
Less than 0.006(0.00024)

Ring Gear

Inspect the ring gear

If the ring gear teeth are broken or excessively worn, the ring gear must be replaced.

Ring Gear Replacement

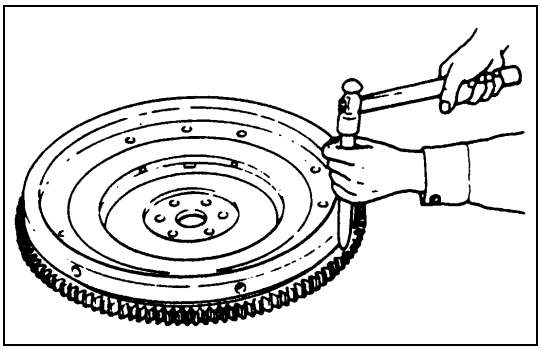
6A3-84-2.tif

Removal

Strike around the edges of the ring gear with a hammer and chisel to remove it.

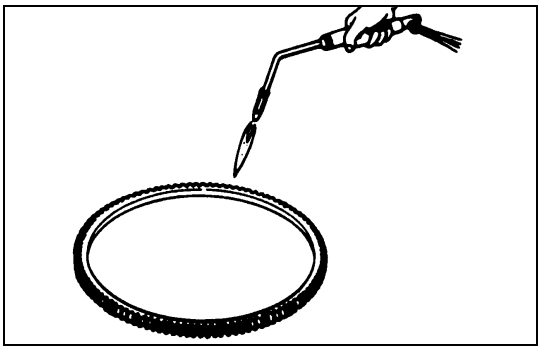
6A3-84-3.tif

Installation

1) Heat the ring gear evenly with a gas burner to invite thermal expansion.
2) Install the ring gear when it is sufficiently heated.

   The ring gear must be installed with the chamfer facing the clutch.

Pilot Bearing

Check the pilot bearing for wear or damage and replace with a new one if any abnormal condition is noticeable.

INSTALLATION

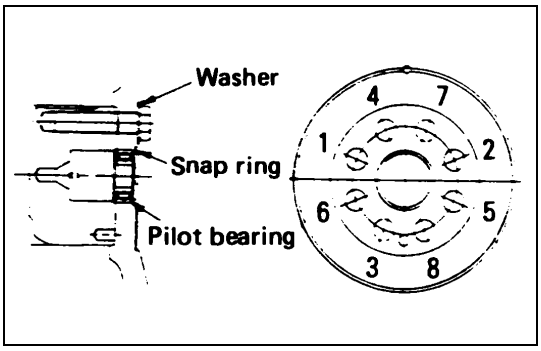

6A3-85-1.tif

9. Pilot Bearing

8. Snap Ring

7. Flywheel Assembly

6. Washer

1) Align the flywheel with the crankshaft knock pin and temporarily tighten the flywheel bolts.
2) Use the crankshaft stopper to prevent the crankshaft from turning.
   Crankshaft stopper:5-8840-2230-0
3) Install the washer and the flywheel bolts and tighten to the specified torque in numerical order show in the illustration.

Flywheel Bolt torque	N•m (kg•m/lb•ft)
1st step	2nd step
78 (8.0/58)	90°-120°

4) Remove the crankshaft stopper.

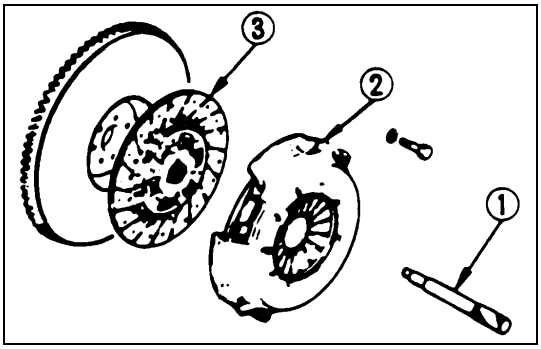

6A3-85-2.tif

5. Driven Plate

Use the clutch pilot aligner to install the driven plate.

Clutch Pilot Aligner: 5-8840-2240-0

① Clutch pilot aligner.

② Clutch pressure plate assembly.

③ Driven plate

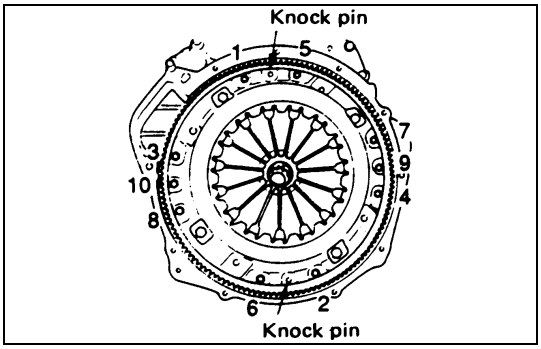

6A3-85-3.tif

4. Clutch Pressure Plate Assembly

1) Align the clutch pressure plate with the flywheel knock pin.
2) Tighten the pressure plate bolts to the specified torque in numerical order.

Clutch Pressure Plate Bolt Torque	N•m (kg•m/lb•ft)
40 (4.1/30)	

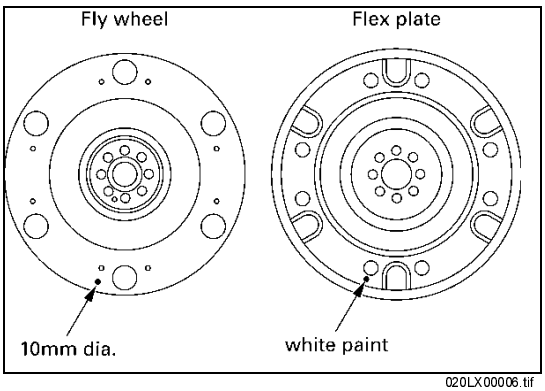

020LX00006.tif

For A/T model

1. Align the knock pin on the crankshaft to install the flywheel.
2. Install the flexible plate with alignment mark (10 mm diameter dent on the flywheel and 10 mm diameter white paint on the flexible plate) and washer.
3. Apply molybdenum disulfide grease to the bolt thread and seat to install the flywheel fixing hole.
   Tighten bolt to two stage tightening method in the numerical order.
   1st step; 78 N•m (58 lbft)
   2nd step; 90 - 120 degrees.

3. Transmission Assembly

Above works refer to “ENGINE ASSEMBLY” section in this manual.

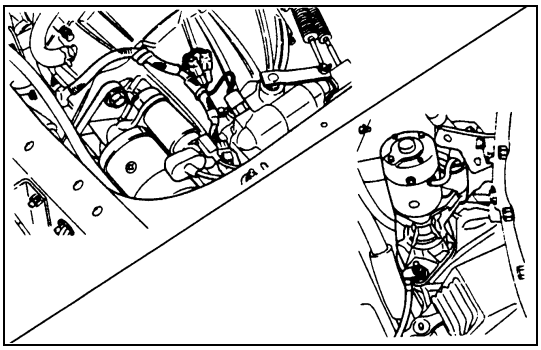

6A3-85-4.tif

2. Starter

Starter Bolt Torque	N•m (kg•m/lb•ft)
76 (7.7/56)	

1. Transmission Panel (M/T model only)

- Connect the battery ground cable.

CRANKSHAFT FRONT OIL SEAL

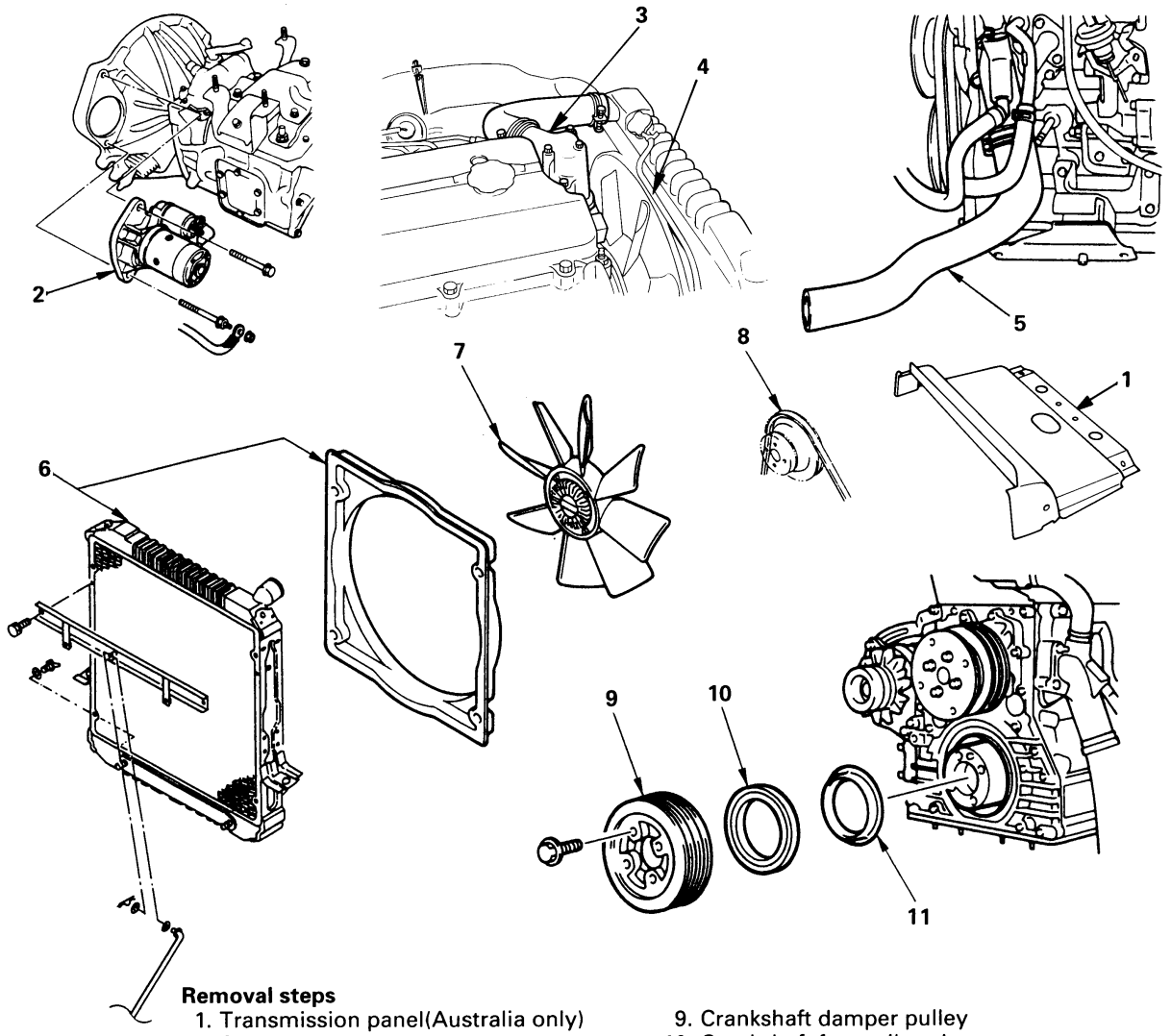

Removal steps

1. Transmission panel(Australia only)
2. Starter
3. Radiator upper hose
4. Coolant reserve tank hose/Bypass hose
5. Radiator lower hose
6. Radiator (with guide)
7. Fan assembly
8. Fan belt
9. Crankshaft damper pulley
10. Crankshaft front oil seal
11. Crankshaft front slinger

Installation steps

To install, follow the removal steps in the reverse order.

6A3-86-1.tif

REMOVAL

Preparation

- Disconnect battery ground cable.
- Tilt the cab.
- Drain coolant

1. Transmission Panel (M/T model only)

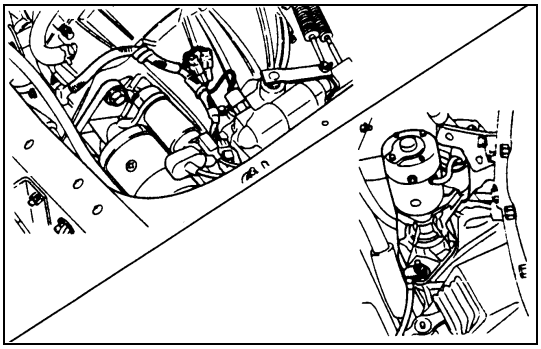

6A3-87-1.tif

2. **Starter**
   - Disconnect the battery cable at the starter motor.
   - Remove the starter assembly from flywheel housing.
3. **Radiator Upper Hose**
4. **Coolant Reserve Tank Hose/Bypass Hose**
5. **Radiator Lower Hose**
6. **Radiator (with Guide)**
   For the A/T model vehicle, remove the oil cooler pipe first.

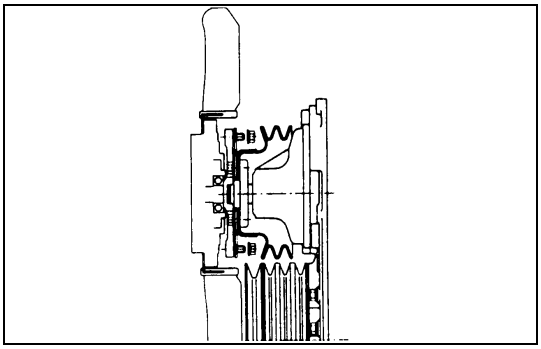

6A3-87-2.tif

7. **Fan Assembly**
8. **Fan Belt**

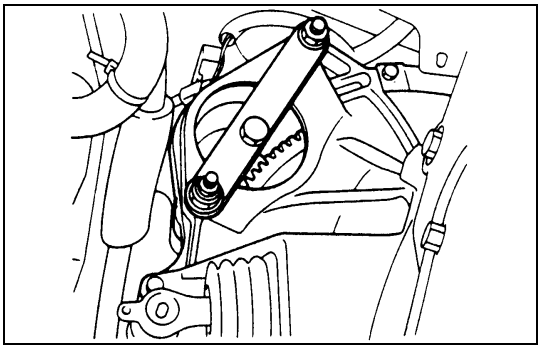

6A3-87-3.tif

9. **Crankshaft Damper Pulley**
   1) Use the crankshaft stopper to prevent the crankshaft from turning.
      Crankshaft Stopper: 5-8840-2230-0
   2) Loosen the damper pulley bolts and remove the damper pulley.

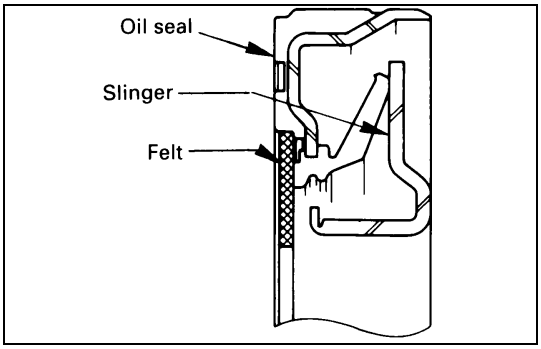

6A3-87-4.tif

10. **Crankshaft Front Oil Seal**
    CAUTION:
    Be careful not to damage the crankshaft oil seal contact surface during the removal procedure.

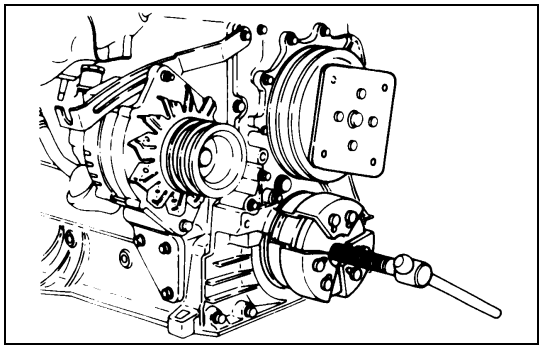

6A3-88-1.tif

11. Crankshaft Front Slinger

Use the slinger puller to pull out the slinger.
Slinger Puller: 5-8840-2360-0

INSTALLATION

11. Crankshaft Front Slinger

Press in the slinger using oil seal setting tool kit.
Oil Seal Setting Tool Kit: 5-8840-2431-0
Front slinger and oil seal setting tools

Part Name	Stamp	Slinger	Oil Seal
Adapter	FT	O	O
Sleeve	FT	O	O
Oil seal adapter ring	FT		O
Center bolt	-	O	O
Adapter bolt	-	O	O

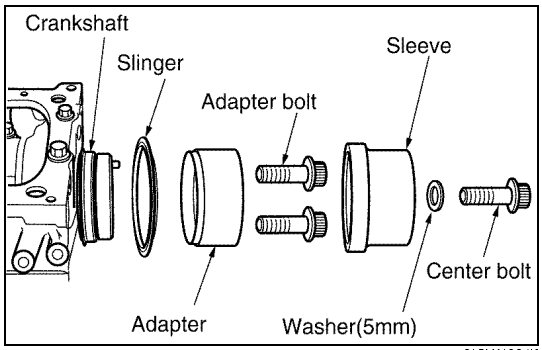

015LX160.tif

1) Insert the slinger ① into the end of adapter ② and install the adapter on the crankshaft.

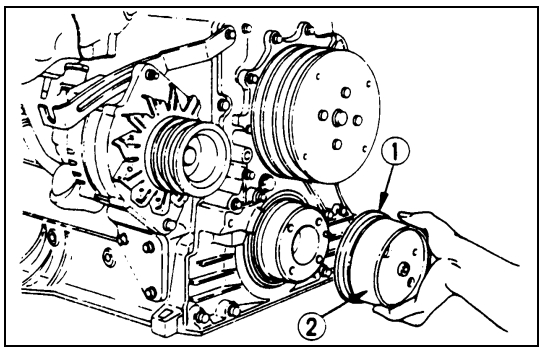

6A3-88-2.tif

2) Cover the sleeve ③ and tighten the bolt until the sleeve comes to contact the adapter stopper ④.

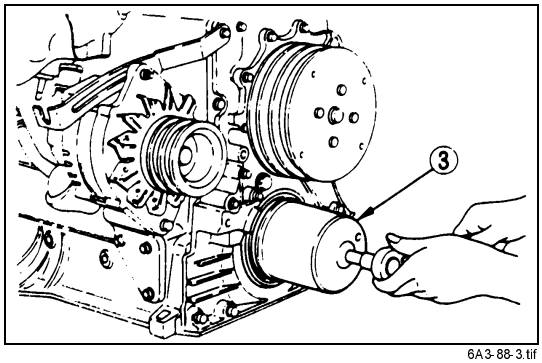

6A3-88-3.tif

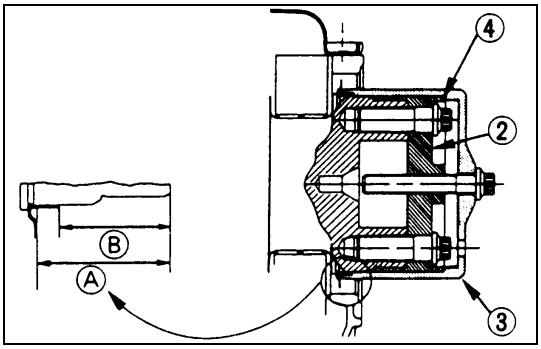

6A3-89-1.tif

3) With the slinger pressed in, make sure of measurements specified in the illustration as well as of slinger deflection.
   Ⓐ : 40.5 ± 0.3mm (1.594 ± 0.012 in)
   Ⓑ : 34.0 ± 0.1mm (1.339 ± 0.004 in)

NOTE:
Be sure to replace the slinger and oil seal as a set.
Use about 5 mm thickness plain washer on the center bolt.

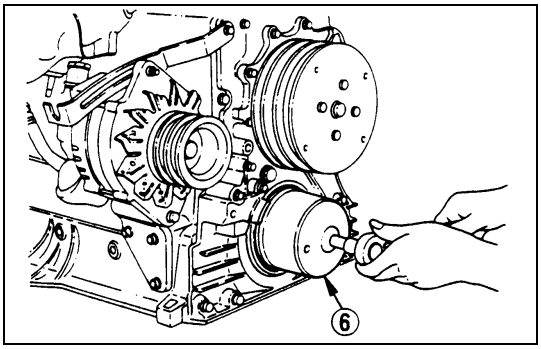

6A3-89-2.tif

10. Crankshaft Front Oil Seal

1) Apply engine oil to the lip of the oil seal.
2) Press in the oil seal using the front oil seal setting tool kit.

- Remove the slinger sleeve and insert the oil seal ⑤ into the adapter ②.
- Install the oil seal sleeve ⑥ to the adapter ② and tighten the center bolt until the sleeve comes to contact the adapter stopper ⑦.

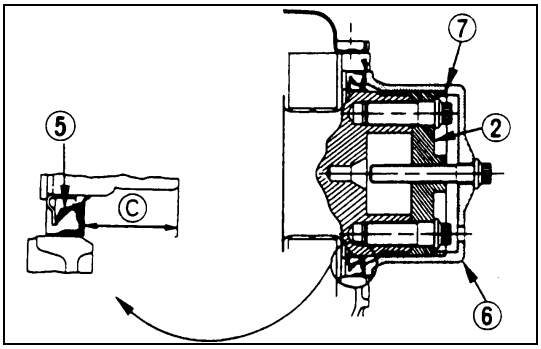

6A3-89-3.tif

- With the oil seal pressed in, make sure of the measurements specified in the illustration.
  Ⓒ : 31 ± 0.3 mm (1.220 ± 0.012 in)

NOTE:
Be sure to replace the slinger and oil seal as a set.
Use about 5 mm thickness plain washer on the center bolt.

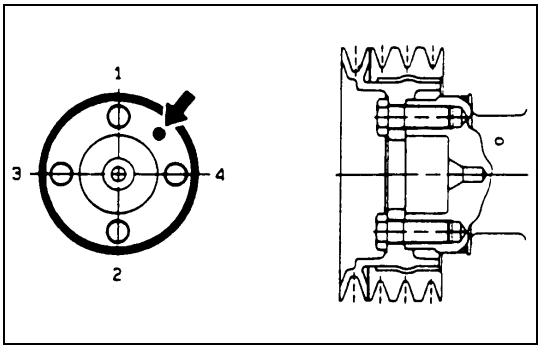

6A3-89-4.tif

9. Crankshaft Damper Pulley

1) Apply a coat of engine oil to the threads of the bolts.
2) Align the damper pulley with the crankshaft knock pin and tighten the bolts to the specified torque in numerical order.

Damper Pulley Bolt Torque	N•m (kg•m/lb•ft)
200 (20.4/147)	

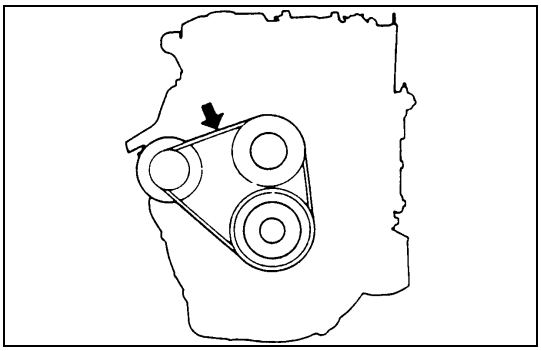
6A3-89-5.tif

8. Fan Belt

Check the drive belt tension.

Depress the drive belt mid-portion with a 98N (10kg/22lb) force.

Drive Belt Deflection	mm (in)
8 - 12 (0.31 - 0.47) ... New belt	
10 - 14 (0.39 - 0.55) ... Reuse belt	

Check the drive belt for cranking and other damage.

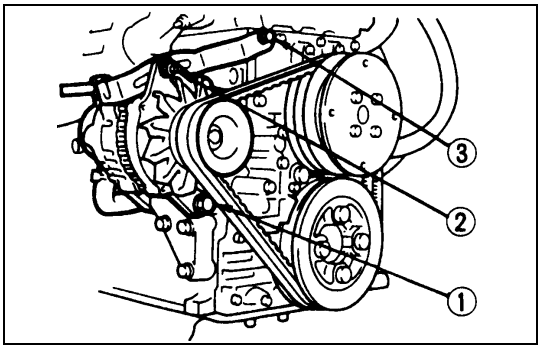

6A3-90-1.tif

Fan Belt Adjustment

Fan belt tension is adjusted by moving the generator.

Torque	N•m (kg•m/lb•ft)
①	40 (4.1/30)
②	24 (2.4/17)
③	46 (4.7/34)

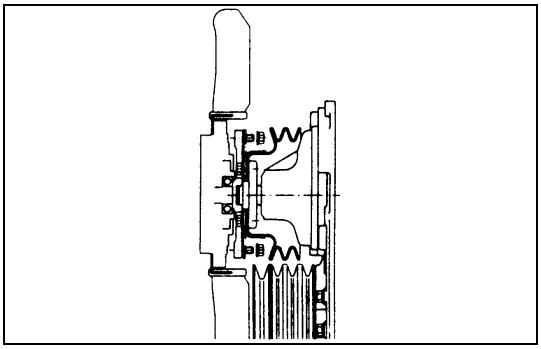

6A3-90-2.tif

7. **Fan Assembly**

Fan Bolt Torque	N•m (kg•m/lb•ft)
24 (2.4/17)	

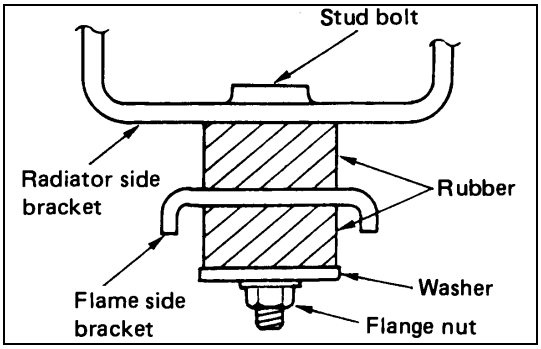

6A3-90-3.tif

6. **Radiator (with Guide)**

Radiator Bolt Torque	N•m (kg•m/lb•ft)
55 (5.6/41)	

5. **Radiator Lower Hose**
4. **Coolant reserve Tank Hose/Bypass Hose**
3. **Radiator Upper Hose**

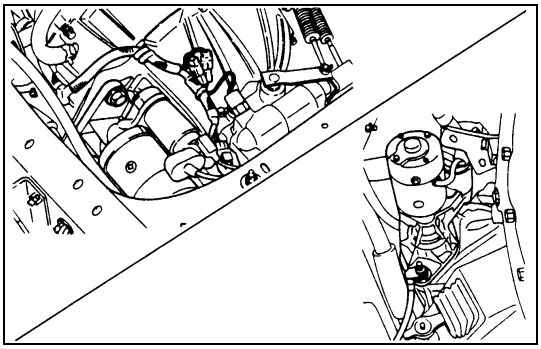

6A3-90-4.tif

2. **Starter**

Starter Bolt Torque	N•m (kg•m/lb•ft)
76 (7.7/56)	

1. **Transmission Panel (M/T model only)**
   - Connect battery ground cable
   - Pour engine coolant into engine.

CRANKSHAFT REAR OIL SEAL

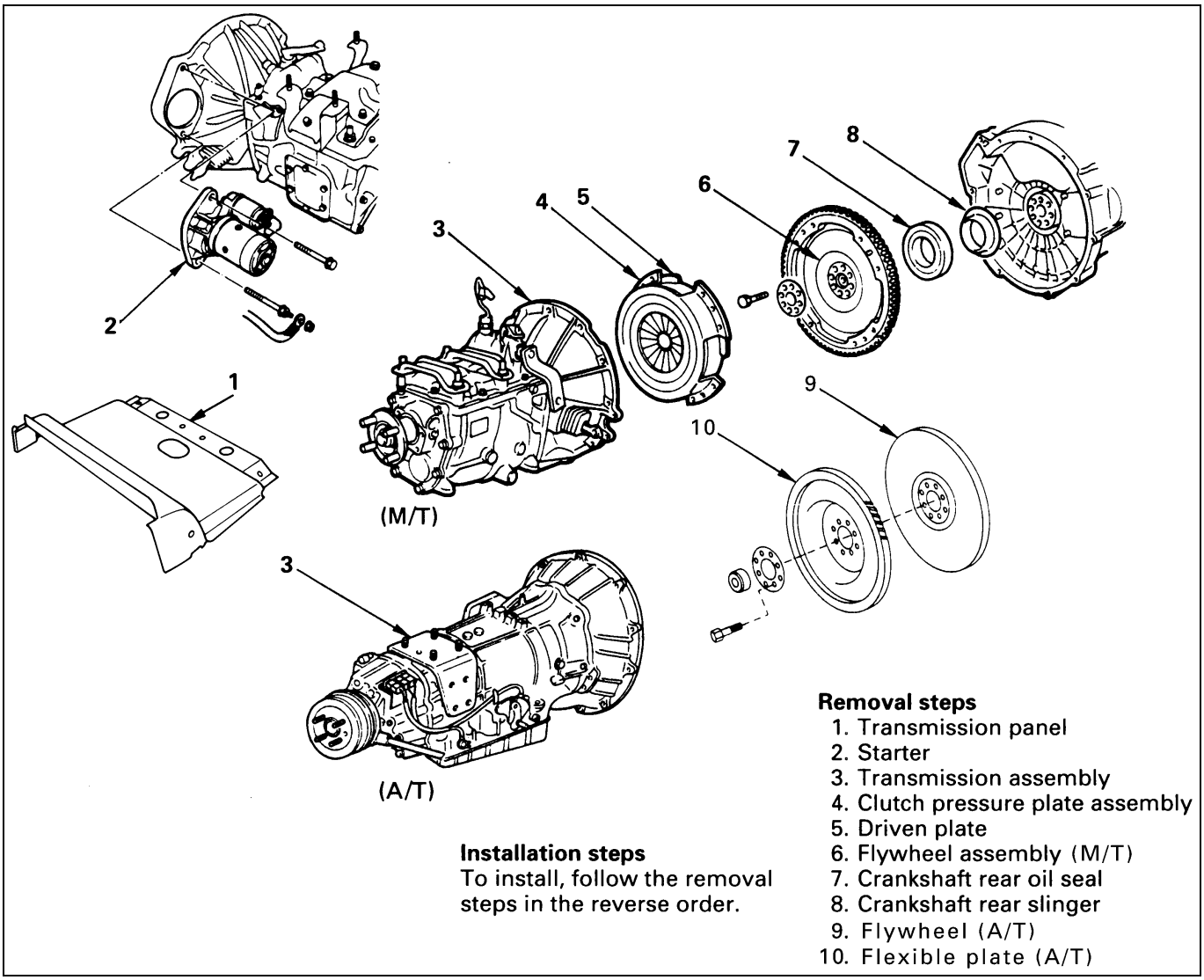

6A3-91-1.tif

REMOVAL

Preparation

- Disconnect battery ground cable.

1. Transmission Panel (M/T model only.)

2. Starter

1) Disconnect the battery cable at the starter motor.
2) Remove the starter assembly from flywheel housing.

3. Transmission Assembly

Above works refer to “ENGINE ASSEMBLY” section in this manual.

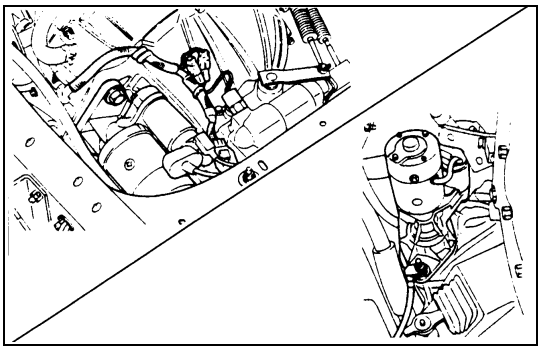

6A3-91-2.tif

4. **Clutch Pressure Plate Assembly**
5. **Driven Plate**
6. **Flywheel Assembly**

   Above works refer to “FLYWHEEL AND PILOT BEARING” section in this manual.

   For the A/T vehicle, loosen the flywheel fixing bolt and then remove the washer, the flexible plate, the flywheel and the sleeve in this order.

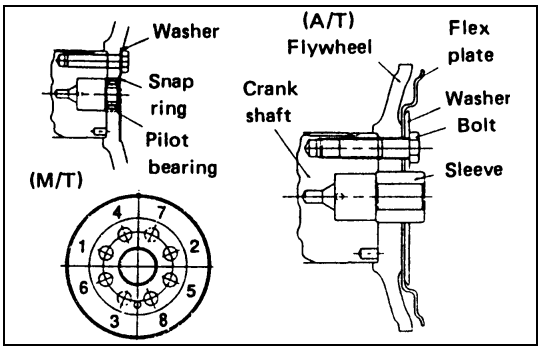

6A3-92-1.tif

7. **Crankshaft Rear Oil Seal**

   CAUTION:

   Be careful not to damage the crankshaft oil seal contact surface during the removal procedure.

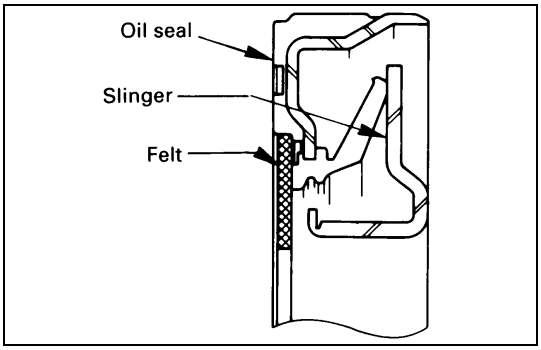

6A3-92-2.tif

8. **Crankshaft Rear Slinger**

   Use the slinger puller to pull out the slinger.

   Slinger Puller: 5-8840-2360-0

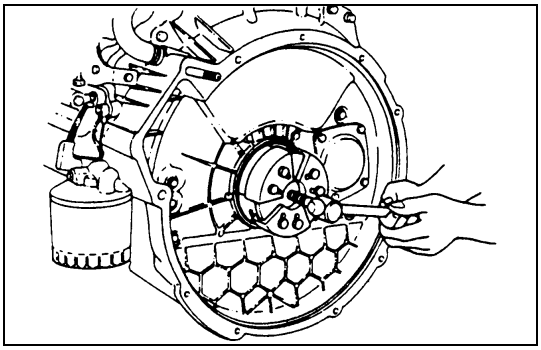

6A3-92-3.tif

INSTALLATION

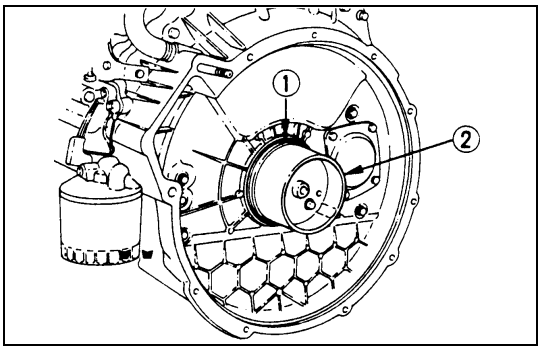

6A3-93-1.tif

8. Crankshaft Rear Slinger

Press in the slinger using oil seal setting tool kit.

- Insert the slinger ① into the end of adapter ② and install the adapter on the crankshaft.

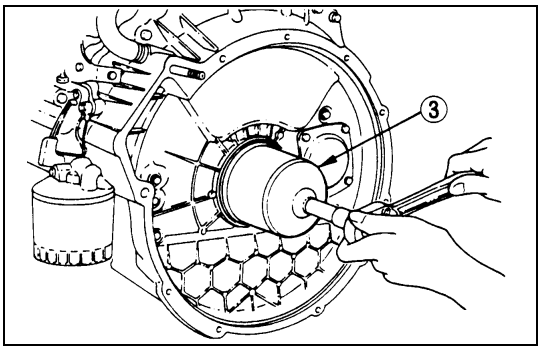

6A3-93-2.tif

- Cover the sleeve ③ and tighten the bolt until the sleeve comes to contact the adapter stopper ④.

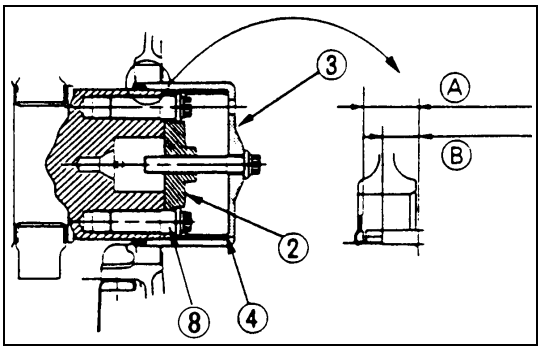

6A3-93-3.tif

- Make sure of measurements specified in the illustration as well as of slinger deflection.
  Ⓐ :17.3 ± 0.3mm (0.681 ± 0.012 in)
  Ⓑ :10.8 ± 0.1mm (0.425 ± 0.004 in)

NOTE:

Be sure to replace the slinger and oil seal as a set.

Oil Seal Setting Tool Kit: 5-8840-2431-0

Rear slinger and oil seal setting tools

Part Name	Stamp	Slinger	Oil Seal
Adapter	RR	O	O
Sleeve	RR	O	O
Oil seal adapter ring	RR		O
Center bolt	-	O	O
Adapter bolt	-	O	O
Adapter bolt collar	RR	O	O

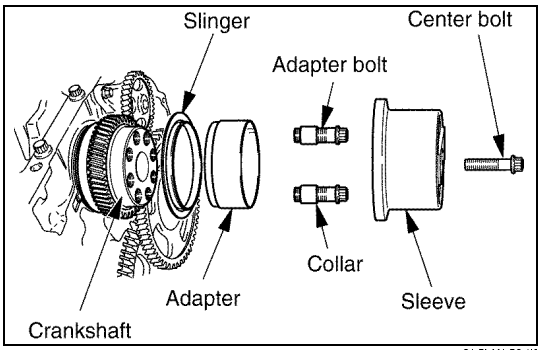

01 5LX1 59.tif

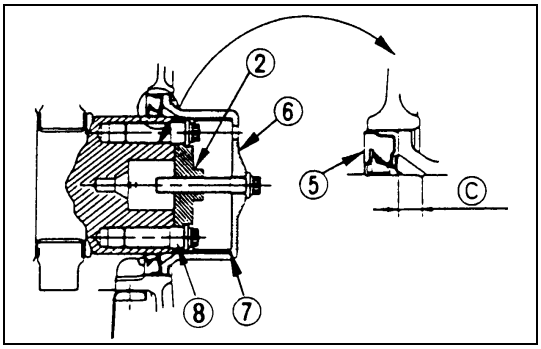

6A3-94-2.tif

7. Crankshaft Rear Oil Seal

1) Apply engine oil to the lip of the oil seal.
2) Press in the oil seal using rear oil seal setting tool kit.

- Remove the slinger sleeve and insert the oil seal ⑤ into the adapter ②.
- Install the atapter ring into the sleeve.
- Install the oil seal sleeve ⑥ to the adapter ② and tighten the center bolt until the sleeve comes to contact the adapter stopper ⑦.

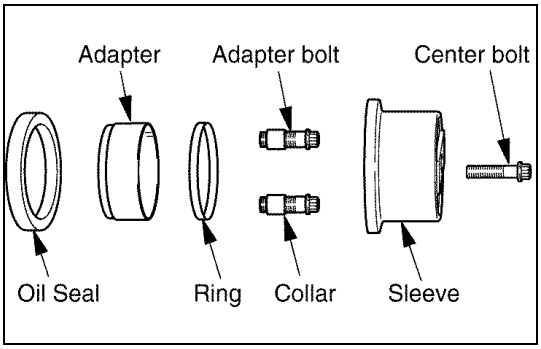

015LX158.tif

- Make sure of the measurements specified in the illustration.
  Ⓒ : 7.8 ± 0.3mm (0.307 ± 0.012 in)

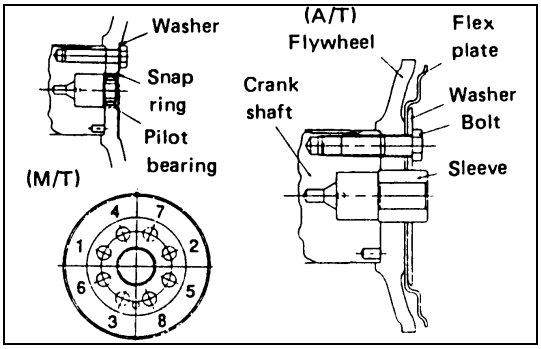

6A3-94-3.tif

6. Flywheel Assembly

1) Apply a coat of molybdenum disulfide grease to the flywheel bolt threads and setting faces.
2) Align the flywheel with the crankshaft knock pin and temporarily tighten the flywheel bolts.
3) Use the crankshaft stopper to prevent the crankshaft from turning.
   Crankshaft Stopper: 5-8840-2230-0
4) Install the washer and the flywheel bolts and tighten to the specified torque in numerical order show in the illustration.

Flywheel Bolt Torque — N•m (kg•m/lb•ft)

1st step	2nd step
78 (8.0/58)	90°-120°

5) Remove the crankshaft stopper.

5. Driven Plate

4. Clutch Pressure Plate Assembly

Above works refer to “FLYWHEEL AND PILOT BEARING” section in this manual.

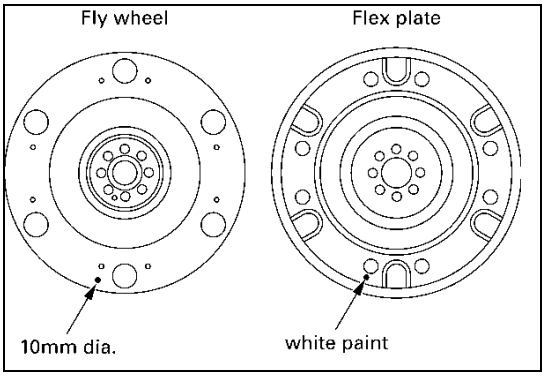

020LX00006.tif

For A/T model

1. Align the knock pin on the crankshaft to install the flywheel.
2. Install the flexible plate with alignment mark (10 mm diameter dent on the flywheel and 10 mm diameter white paint on the flexible plate) and washer.
3. Apply molybdenum disulfide grease to the bolt thread and seat to install the flywheel fixing hole.

   Tighten bolt to two stage tightening method in the numerical order.

   1st step; 78 N•m (58 lbft)

   2nd step; 90 - 120 degrees.

3. Transmission Assembly

Above works refer to “ENGINE ASSEMBLY” section in this manual.

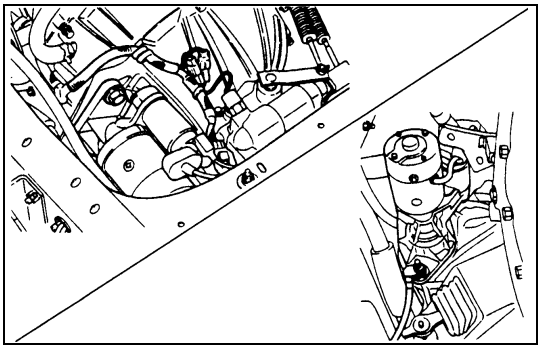
6A3-95-1.tif

2. Starter

Starter Bolt Torque	N•m (kg•m/lb•ft)
76 (7.7/56)	

1. Transmission Panel (M/T model only)

- Connect the battery ground cable.

CRANKSHAFT

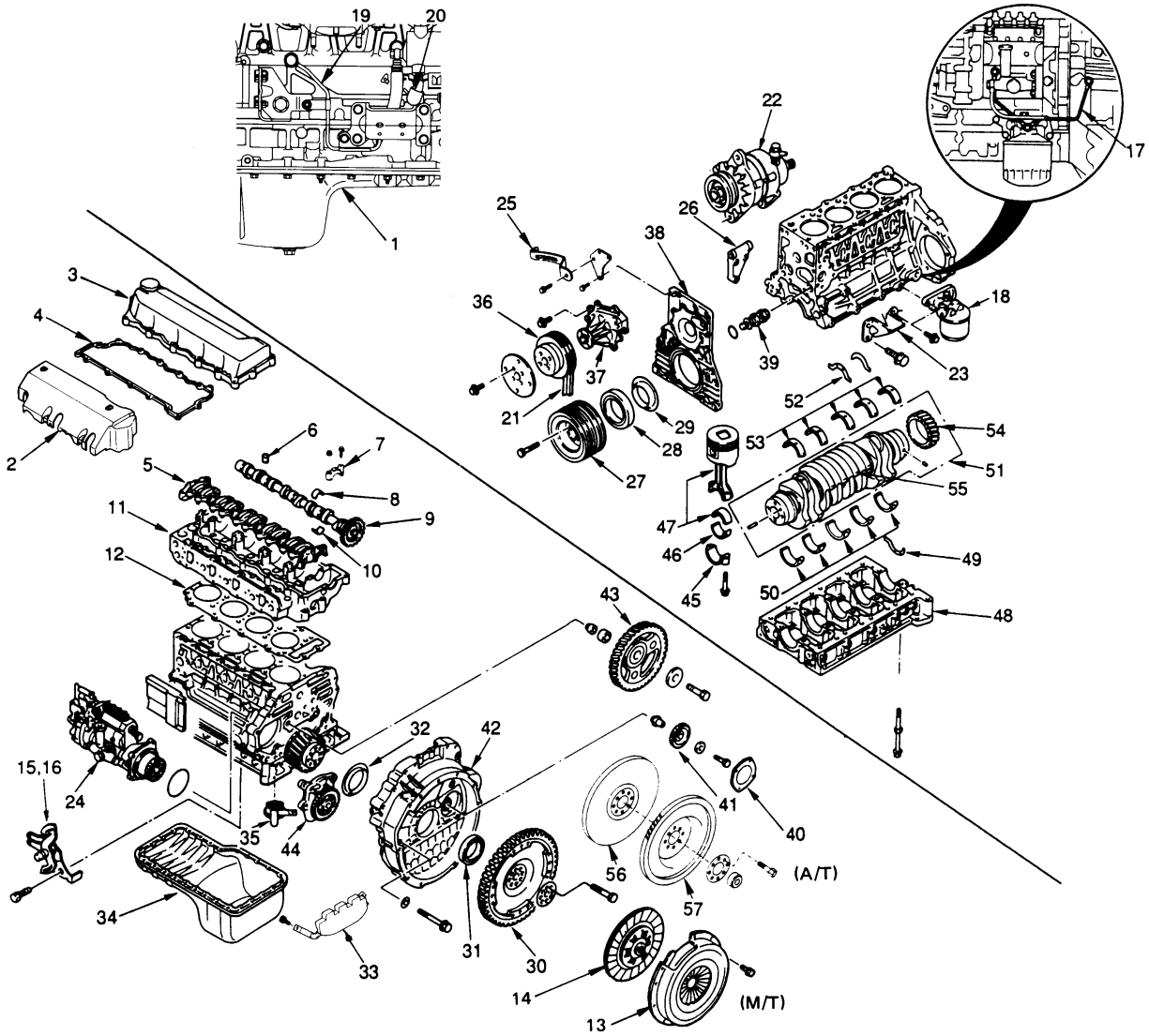

Removal steps

1. Engine cover
2. Nozzle cover
3. Cylinder head cover
4. Cylinder head cover gasket
5. Rocker arm shaft assembly
6. Valve cap
7. Camshaft bearing cap
8. Camshaft bearing upper
9. Camshaft assembly
10. Camshaft bearing lower
11. Cylinder head assembly
12. Cylinder head gasket
13. Clutch pressure plate assembly
14. Driven plate
15. Engine control wire
16. Engine control lever assembly
17. Oil pipe
18. Oil filter assembly
19. Vacuum pump oil pipe
20. Vacuum pump rubber hose
21. Fan belt
22. Generator
23. Engine foot
24. Injection pump assembly
25. Fan belt adjust plate
26. Generator bracket
27. Crankshaft pulley
28. Crankshaft front oil seal
29. Crankshaft front slinger
30. Flywheel (M/T)
31. Crankshaft rear oil seal
32. Crankshaft rear slinger
33. Spacer rubber
34. Oil pan
35. Oil pump strainer
36. Water pump pulley
37. Water pump
38. Front retainer
39. Oil thermo valve
40. Power steering pump idle gear cover
41. Power steering pump idle gear
42. Flywheel housing
43. Idle gear A
44. Oil pump assembly
45. Connecting rod cap assembly
46. Connecting rod lower bearing
47. Piston and connecting rod assembly
48. Crankcase
49. Thrust bearing lower
50. Crankshaft bearing lower
51. Crankshaft assembly
52. Thrust bearing upper
53. Crankshaft bearing upper
54. Crankshaft gear
55. Crankshaft
56. Flywheel (A/T)
57. Flexible plate(A/T)

Installation steps

To install, follow the removal steps in the reverse order.

6A3-96-1.tif

REMOVAL

Preparation

- Disconnect battery ground cable.
- Tilt the cab
- Drain coolant and engine oil

1. **Engine Assembly**
   Above works refer to “ENGINE ASSEMBLY” section in this manual.
2. **Nozzle Cover**
3. **Cylinder Head Cover**
4. **Cylinder Head Cover Gasket**
5. **Rocker Arm Shaft Assembly**
   Above works refer to “ROCKER ARM SHAFT ASSEMBLY” section in this manual.
6. **Valve Cap**
7. **Camshaft Bearing Cap**
8. **Camshaft Bearing Upper**
9. **Camshaft Assembly**
10. **Camshaft Bearing Lower**
    Above works refer to “CAMSHAFT ASSEMBLY” section in this manual.
11. **Cylinder Head Assembly**
    Above works refer to “CYLINDER HEAD” section in this manual.
12. **Cylinder Head Gasket**

    CAUTION:

    Do not reuse the cylinder head gasket.

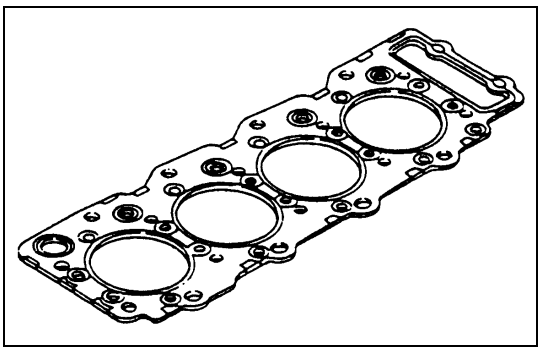

6A3-97-1.tif

13. **Clutch Pressure Plate Assembly**
14. **Driven Plate**
    Above works refer to “FLYWHEEL AND PILOT BEARING” section in this manual.
15. **Engine Control Wire**
16. **Engine Control Lever Assembly**
17. **Oil Pipe**

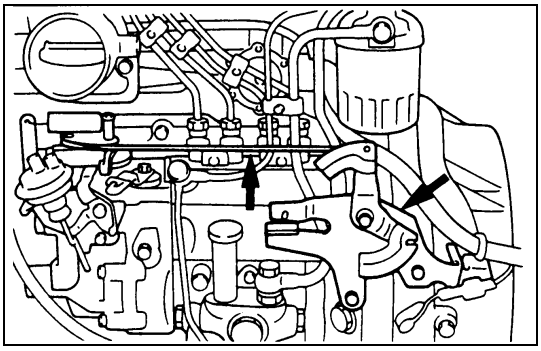

6A3-67-2.tif

18. **Oil Filter Assembly**

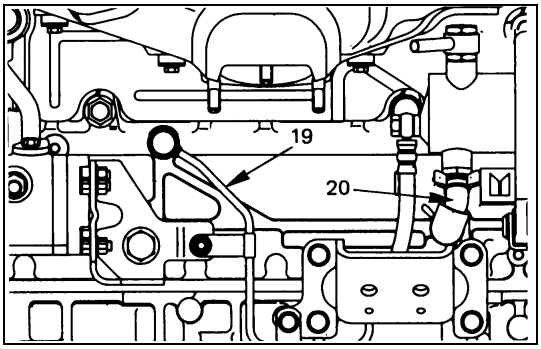

6A3-98-1.tif

19. Vacuum Pump Oil Pipe
20. Vacuum Pump Rubber Hose
21. Fan Belt
22. Generator

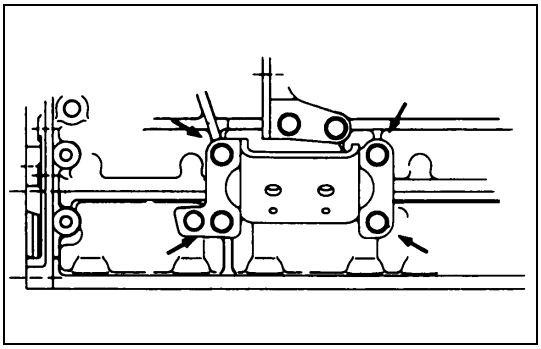

6A3-98-2.tif

23. Engine Foot

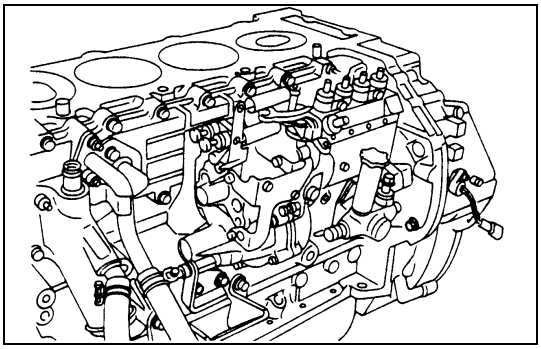

6A3-98-3.tif

24. Injection Pump Assembly

1) Remove the injection pump bracket bolts and the injection pump rear bracket bolts.
2) Then remove the injection pump assembly.

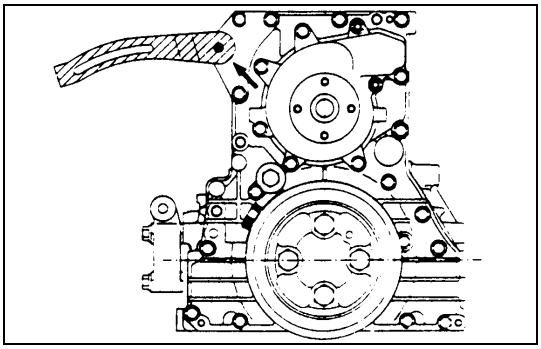

6A3-98-4.tif

25. Fan Belt Adjust Plate

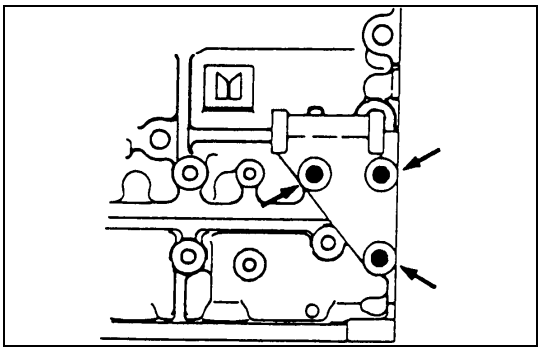

6A3-98-5.tif

26. Generator Bracket

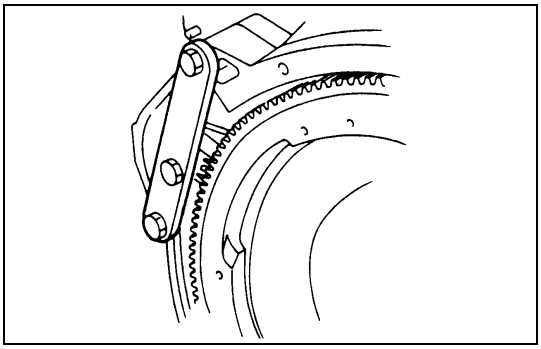

6A3-99-1.tif

27. Crankshaft Damper Pulley

1) Use the crankshaft stopper to prevent the crankshaft from turning.
   Crankshaft Stopper:5-8840-2230-0
2) Loosen the damper pulley bolts and remove the damper pulley.

28. Crankshaft Front Oil Seal

29. Crankshaft Front Slinger

Above works refer to “CRANKSHAFT FRONT OIL SEAL” section in this manual.

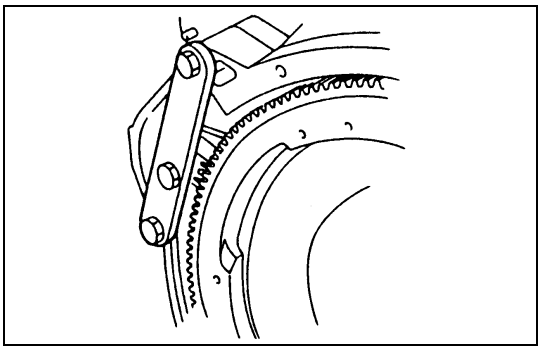

6A3-99-2.tif

30. Flywheel Assembly

1) Use the crankshaft stopper to prevent the crankshaft from turning
   Crankshaft Stopper:5-8840-2230-0
2) Loosen the flywheel bolts in numerical order a little at a time as shown in the illustration.
3) Remove the flywheel stopper and the flywheel assembly.

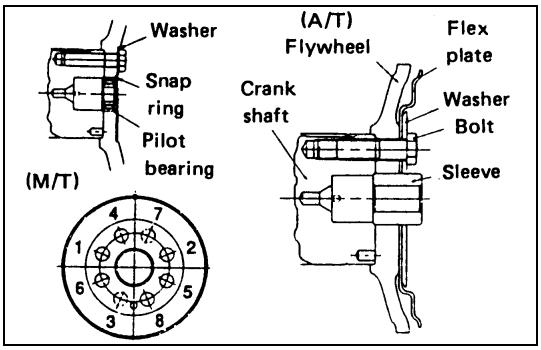

6A3-99-3.tif

For the A/T vehicle, loosen first the flywheel fixing bolt, and then remove the washer, the flexible plate, the flywheel and the sleeve in this order.

31. Crankshaft Rear Oil Seal

32. Crankshaft Rear Slinger

Above works refer to “CRANKSHAFT REAR OIL SEAL” section in this manual.

33. Spacer Rubber (NKR model only)

For the 4WD model vehicle, remove the stiffener before removing the spacer rubber.

34. Oil Pan

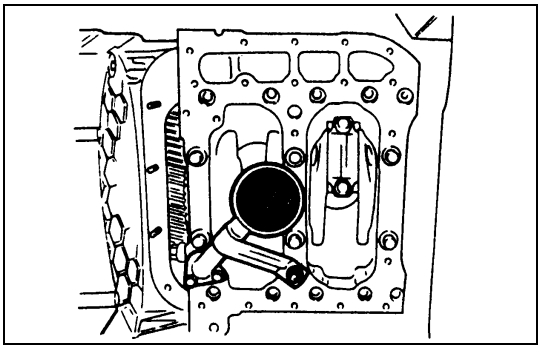

6A3-100-1.tif

35. Oil Pump Strainer

36. Water Pump Pulley

37. Water Pump

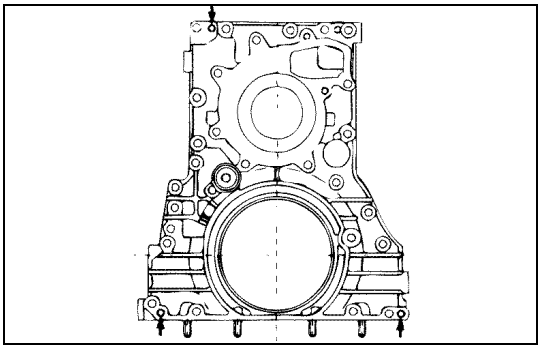

020LX011.tif

38. Front Retainer

Install the three front retainer fixing bolts to the front retainer replacer holes as shown in the illustration, and tighten the bolts alternately a little at a time.

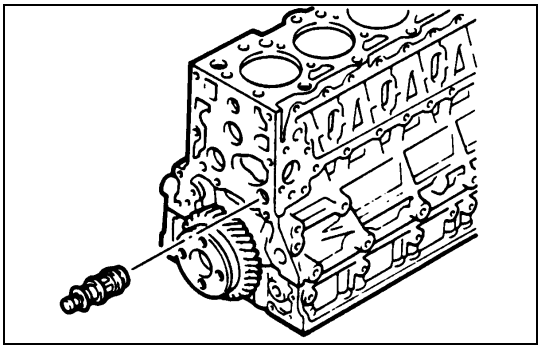

6A3-100-3.tif

39. Oil Thermo Valve (4HF1, 4HF1-2, 4HG1, 4HG1-T)

Pull out the thermo valve from the cylinder body.

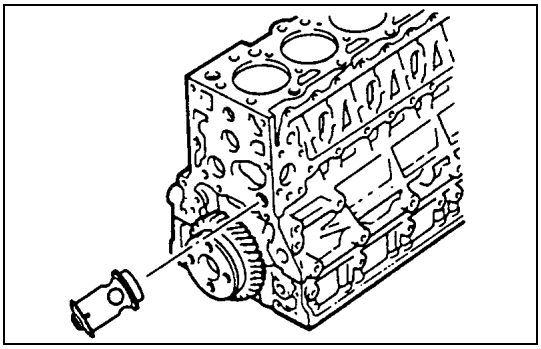

6A46-1-1.tif

39-1. Bypass Valve (4HE1-T, 4HE1-TC)

Pull out the bypass valve from the cylinder body.

40. Power Steering Pump Idle Gear Cover

41. Power Steering Pump Idle Gear

42. Flywheel Housing

43. Idle Gear A

44. Oil Pump Assembly

Above works refer to “TIMING GEAR REPLACEMENT” section in this manual.

45. Connecting Rod Cap

46. Connecting Rod Lower Bearing

47. Piston and Connecting Rod Assembly

Above works refer to “PISTON AND CONNECTING ROD” section in this manual.

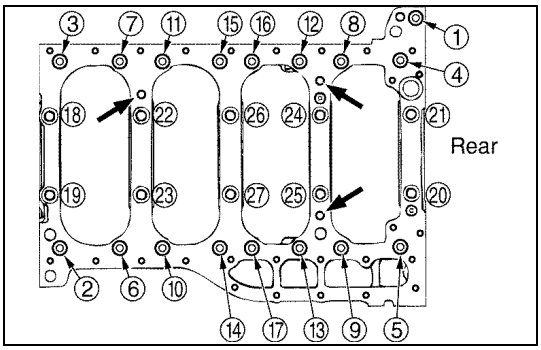

020LX018.tif

48. Crankcase

1) Loosen the crankcase bolts in numerical order a little at a time.
2) Install the three crankcase fixing bolts (See left arrow marks) to the crankcase replacer holes as shown in the illustration, and tighten the bolts alternate a little at a time.

NOTE:
When removing the crankcase, be sure to remove the oil pump and the generator bracket before that.

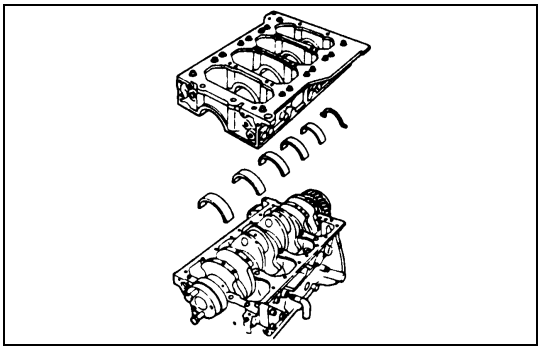

6A3-101-2.tif

49. Thrust Bearing Lower

50. Crankshaft Bearing Lower

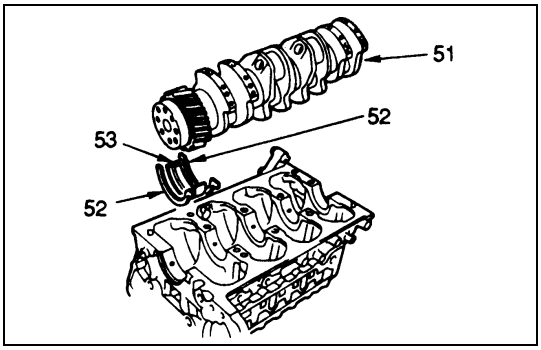

6A3-101-3.tif

51. Crankshaft Assembly

52. Thrust Bearing Upper

53. Crankshaft Bearing Upper

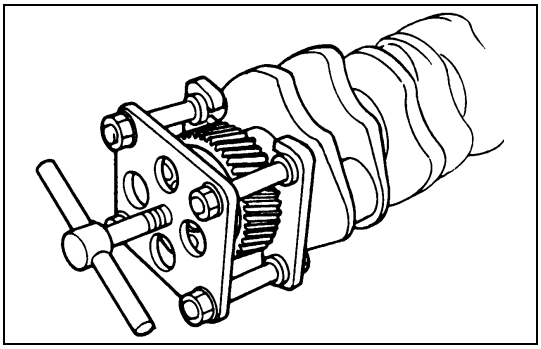

6A3-101-4.tif

54. Crankshaft Gear

1) Use the crankshaft gear remover to remove the crankshaft gear.
   Crankshaft Gear Remover: 8-9439-6818-0
2) Remove the crankshaft feather key.

55. Crankshaft

INSTALLATION

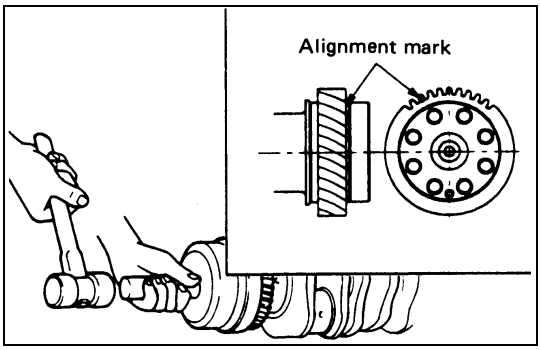

6A3-102-1.tif

55. Crankshaft

54. Crankshaft Gear

1) Use a piston heater to heat the crankshaft gear to 170° - 250°C (338° - 482°F).
2) With the alignment mark “S” on the side of the crankshaft gear turned outward, align the groove on the gear side with the crankshaft pin position and hammer it in with a crankshaft gear installer until it hits the bottom.

CAUTION:

When hammered in with the gear slanted, the crankshaft gear may be caught in the middle and cannot be hammered in fully. Gear it in quickly enough not to allow a shaft line along the gear and the crankshaft to slant.

Crankshaft Gear Installer:8-9439-6819-0

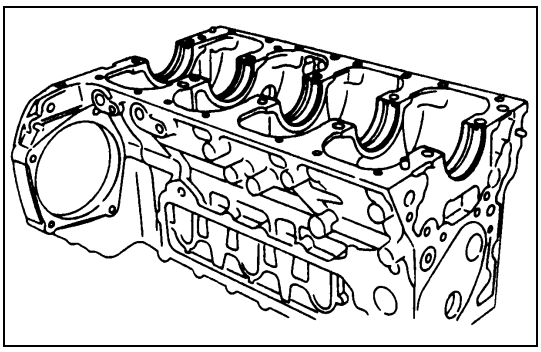

6A3-102-2.tif

53. Crankshaft Bearing Upper

When replacing the crankshaft or the crankshaft bearing with a new one, select the crankshaft bearing according to the respective grades stamped on the crankshaft and the cylinder body.

Refer to the “CRANKSHAFT” in this section 6A.

All upper bearings have oil grooves.

1) Carefully wipe any foreign material from the upper bearing.

CAUTION:

Do not apply engine oil to the bearing back faces and the cylinder body bearing fitting surfaces.

2) Locate the position mark applied at disassembly if the removed upper bearings are to be reused.

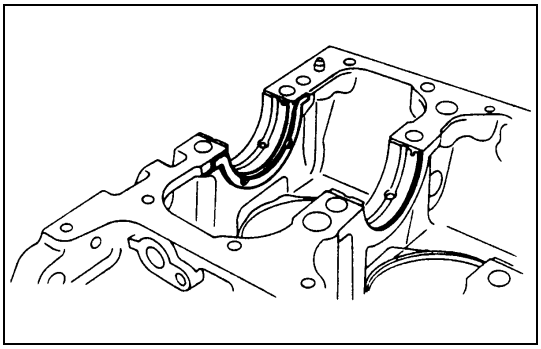

6A3-102-3.tif

52. Thrust Bearing Upper

Install the thrust bearing upper to the front side of the cylinder body No.5 journal. At this time, the thrust bearing upper may be pasted to the cylinder body with grease. However, be sure to wipe off any excessive grease.

CAUTION:

The thrust bearing oil grooves must be facing the sliding faces.

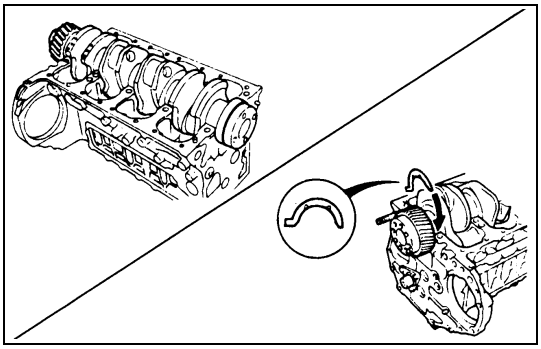

6A3-103-1.tif

51. Crankshaft Assembly

Apply an ample coat of engine oil to the crankshaft journals and the crankshaft bearing surfaces before installing the crankshaft with timing gear.

- While pressing on the installed crankshaft toward the rear side, insert the thrust bearing upper into the rear side of the cylinder body No.5 journal.

The thrust bearing oil grooves must be facing the sliding faces.

50. Crankshaft Bearing Lower

All lower bearings does not have oil grooves.

1) Carefully wipe any foreign material from the lower bearing.

CAUTION:

Do not apply engine oil to the bearing back faces and the crankcase bearing fitting surfaces.

2) Locate the position mark applied at disassembly if the removed lower bearings are to be reused.

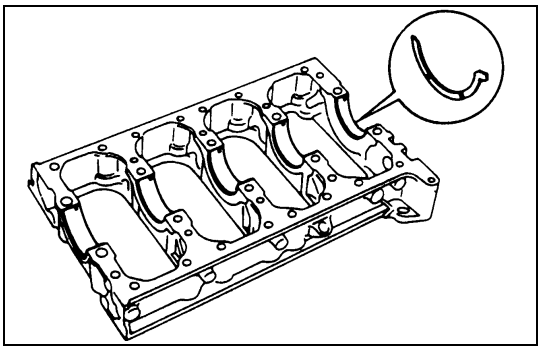

6A3-103-2.tif

49. Thrust Bearing Lower

Install the thrust bearing lower to the rear side of the crankcase No.5 journal.

The thrust bearing oil grooves must be facing the sliding faces.

48. Crankcase

1) Apply a 3mm (0.1 inch) bead of recommended liquid gasket (Three Bond 1207C) or its equivalent to the crankcase upper surface as shown in the illustration.
2) Carefully place the crankcase on the cylinder body.

- Install the crankcase within 20 minutes after application of liquid gasket.

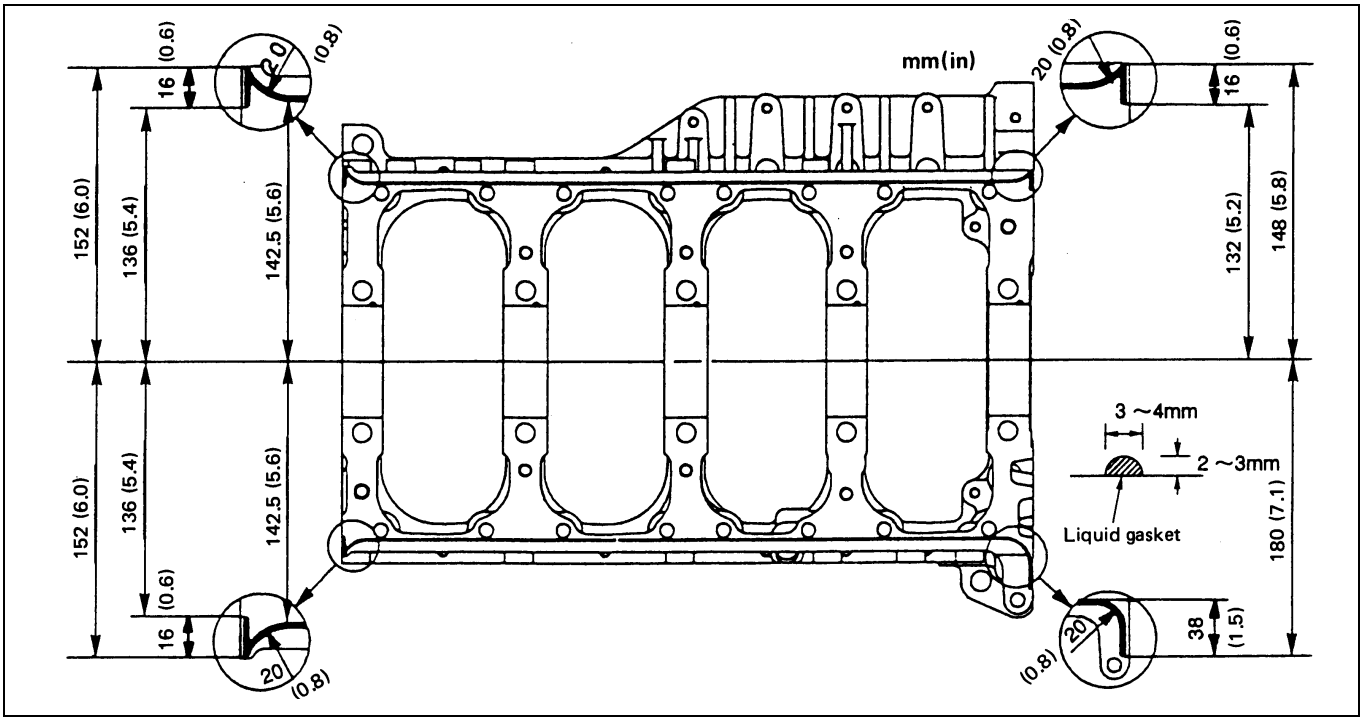

6A3-104-1.tif

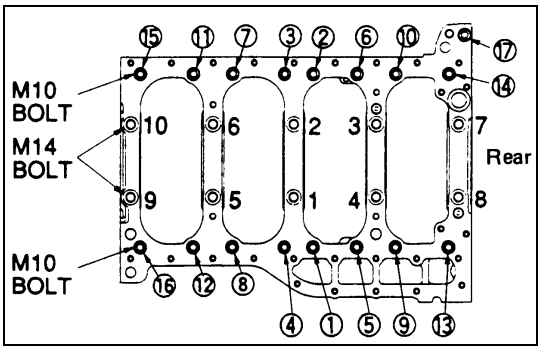

6A3-104-2.tif

3) Tighten the crankcase to the specified torque in the numerical order shown in the illustration.

Crankcase Bolt Torque (M14:1 ~ 10)		N•m (kg•m/lb•ft)
1st step	2nd step	3rd step
98 (10/72)	132 (13.5/98)	30° - 60°

Crankcase Bolt Torque (M10: ① ~ ⑰)	N•m (kg•m/lb•ft)
37 (3.8/27)	

Angle gauge: 5-8840-0266-0

47. Piston and Connecting Rod Assembly

46. Connecting Rod Bearing

45. Connecting Rod Cap

Above works refer to “PISTON AND CONNECTING ROD” section in this manual.

44. Oil Pump Assembly

43. Idle Gear A

Above works refer to “OIL PUMP ASSEMBLY” section in this manual.

42. Flywheel Houisng

41. Power Steering Pump Idle Gear

40. Power Steering Pump Idle Gear Cover

39. Oil Thermo Valve

Above works refer to “TIMING GEAR REPLACEMENT” section in this manual.

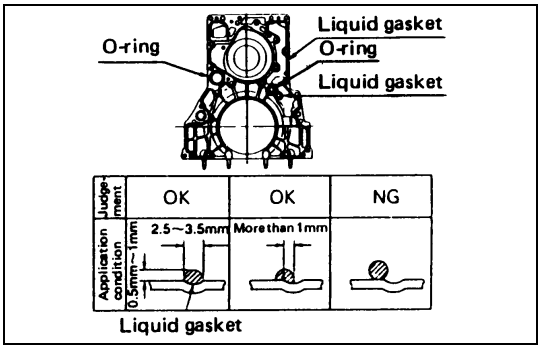

6A3-105-1.tif

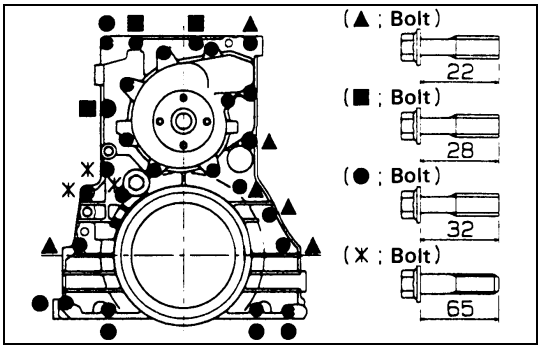

6A3-105-2.tif

38. Front Retainer

1) Carefully wipe any foreign material from the cylinder body front face.
2) Apply 2.5mm-3.5mm bead of the recommended liquid gasket (Three Bond 1207C) or its equivalent on the groove of the front retainer fitting surface shown in the illustration.
3) Install the O-rings (2 pieces) to the front retainer.
   - Install the front retainer within 7 minutes after application of liquid gasket.
   - For the dislocation of liquid gasket, refer to the illustration.
4) Align the cylinder body knock pins with the front retainer knock pin holes.

Front Retainer Bolt Torque	N•m (kg•m/lb•ft)
24 (2.4/17)	

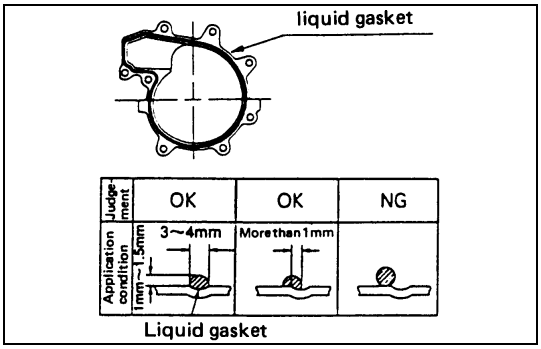

6A3-105-3.tif

37. Water Pump Assembly

1) Apply 3mm-4mm bead of the recommended liquid gasket (Three Bond 1207C) or its equivalent on the water pump fitting surface.
2) Install the water pump to the front retainer.

Water Pump Bolt Torque	N•m (kg•m/lb•ft)
24 (2.4/17)	

- Install the water pump within 7 minutes after application of liquid gasket.
- For the dislocation of liquid gasket, refer to the illustration.

CAUTION:

The water pump clamping bolt is also used to tighten the front retainer. So, install the water pump before liquid gasket gets dry immediately after installation of the front retainer.

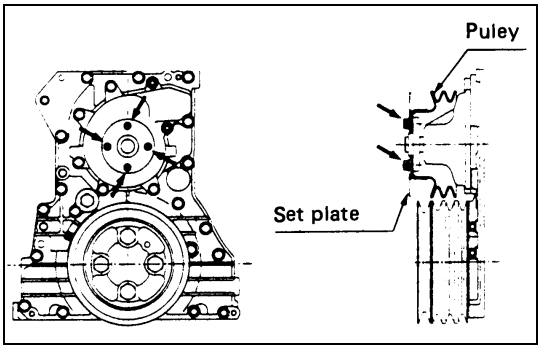

6A3-106-1.tif

36. Water Pump Pulley

Water Pump Pulley Bolt Torque	N•m (kg•m/lb•ft)
24 (2.4/17)	

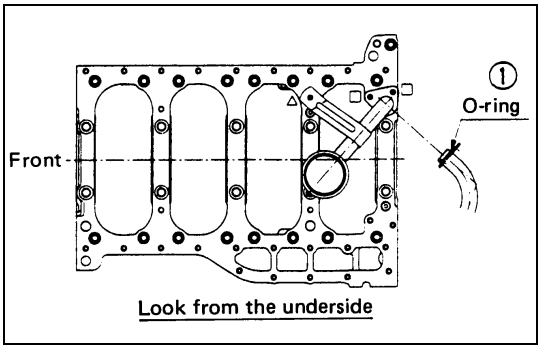

6A3-106-2.tif

35. Oil Pump Strainer

Install the O-ring ① to the oil pump strainer pipe and install the oil pump strainer to the cylinder body shown in the illustration.

Oil Pump Strainer Bolt Torque	N•m (kg•m/lb•ft)
24 (2.4 17)	

34. Oil Pan

33. Spacer Rubber (NKR model only)

Above works refer to “OIL PAN” section in this manual.

32. Crankshaft Rear Slinger

31. Crankshaft Rear Oil Seal

Above works refer to “CRANKSHAFT REAR OIL SEAL” section in this manual.

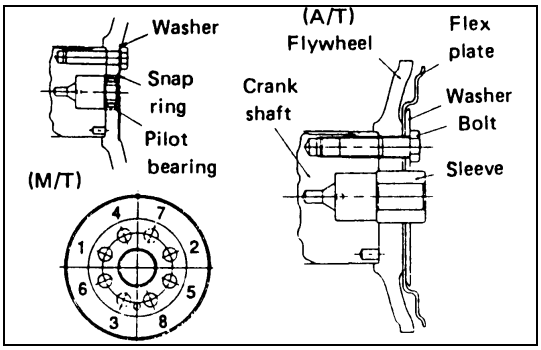

6A3-106-3.tif

30. Flywheel Assembly

1) Align the flywheel with the crankshaft knock pin and temporarily tighten the flywheel bolts.
2) Use the crankshaft stopper to prevent the crankshaft from turning.
   Crankshaft Stopper: 5-8840-2230-0
3) Install the washer and the flywheel bolts and tighten to the specified torque in numerical order show in the illustration.

Flywheel Bolt Torque — N•m (kg•m/lb•ft)

1st step	2nd step
78 (8.0/58)	90°- 120°

4) Remove the crankshaft stopper.

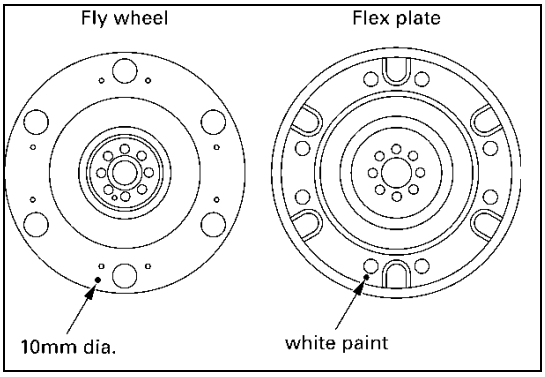

020LX00006.tif

For A/T model

1. Align the knock pin on the crankshaft to install the flywheel.
2. Install the flexible plate with alignment mark (10 mm diameter dent on the flywheel and 10 mm diameter white paint on the flexible plate) and washer.
3. Apply molybdenum disulfide grease to the bolt thread and seat to install the flywheel fixing hole.

   Tighten bolt to two stage tightening method in the numerical order.

   1st step; 78 N•m (58 lbft)

   2nd step; 90 - 120 degrees.

29. Crankshaft Front Slinger

28. Crankshaft Front Oil Seal

Above works refer to “CRANKSHAFT FRONT OIL SEAL” section in this manual.

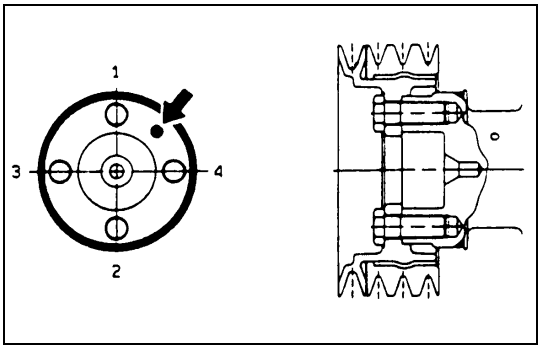

6A3-107-1.tif

27. Crankshaft Damper Pulley

1) Apply a coat of engine oil to the threads of the bolts.
2) Align the damper pulley with the crankshaft knock pin and tighten the bolts to the specified torque in numerical order.

Damper Pulley Bolt Torque	N•m (kg•m/lb•ft)
200 (20.4/147)	

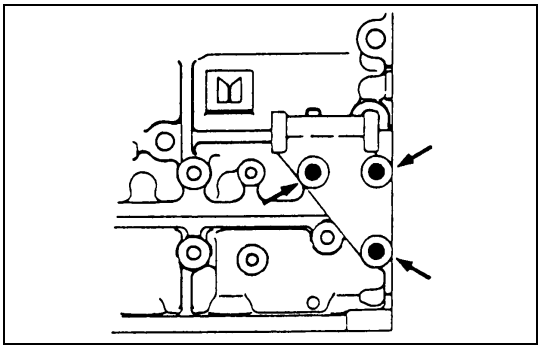
6A3-107-2.tif

26. Generator Bracket

Generator Bracket Bolt Torque	N•m (kg•m/lb•ft)
48 (4.9/35)	

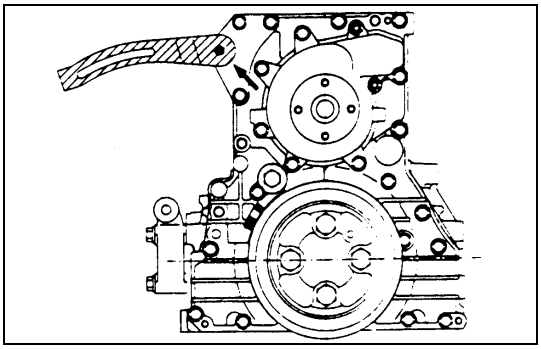
6A3-107-3.tif

25. Fan Belt Adjust Plate

Install the adjust plate and temporarily tighten the adjust plate bolt.

24. Injection Pump Assembly

Above works refer to “INJECTION PUMP ASSEMBLY” section 6C in this manual.

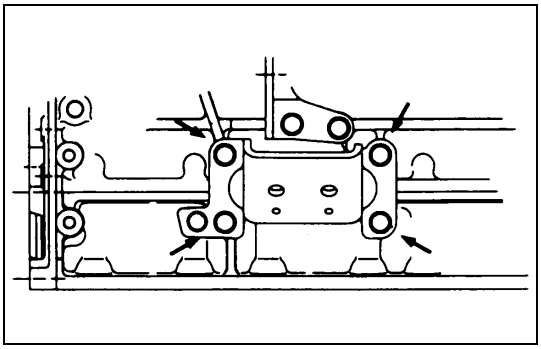

6A3-108-1.tif

23. Engine Foot

Engine Foot Bolt Torque	N•m (kg•m/lb•ft))
51 (5.2/38)	

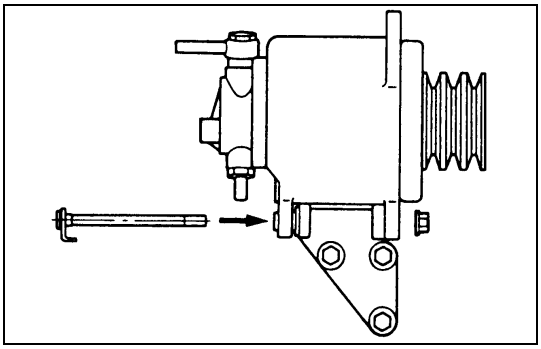

6A3-108-2.tif

22. Generator

NOTE:

When tightening the generator, tighten in advance the fan belt temporarily after its adjustment.

- Insert through the lower fixing bolt from the rear side as shown in the illustration, and tighten it with a nut on the front side.

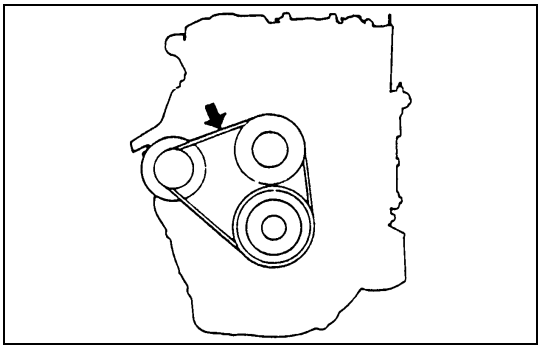

6A3-108-3.tif

21. Fan Belt

Check the drive belt tension.

Depress the drive belt mid-portion with a 98N (10kg/22lb) force.

Drive Belt Deflection	mm (in)
8 - 12 (0.31 - 0.47)... New belt	
10 - 14 (0.39 - 0.55)... Reuse belt	

Check the drive belt for cranking and other damage.

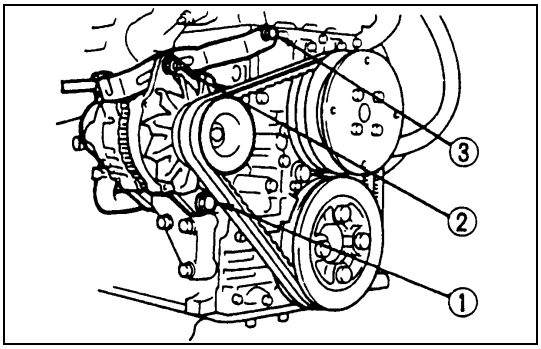

6A3-108-4.tif

Fan Belt Adjustment

Fan belt tension is adjusted by moving the generator.

Torque	N•m (kg•m/lb•ft)
①	40 (4.1/30)
②	24 (2.4/17)
③	46 (4.7/34)

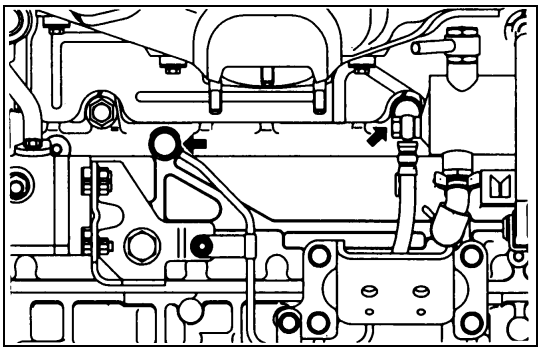

6A3-108-5.tif

20. Vacuum Pump Rubber Hose

19. Vacuum Pump Oil Pipe

Cylinder Body Side	N•m (kg•m/lb•ft)
41 (4.2/30)	

Generator Side	N•m (kg•m/lb•ft)
23 (2.3/17)	

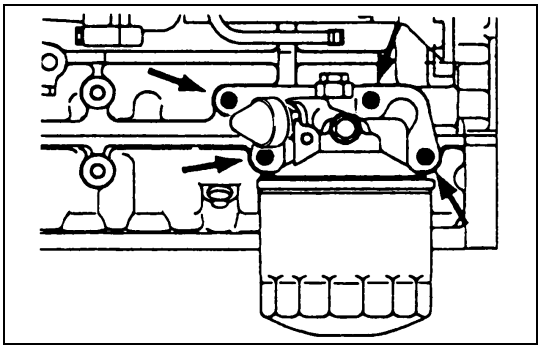

6A3-109-1.tif

18. Oil Filter Assembly

Oil Filter Bolt Torque	N•m (kg•m/lb•ft)
48 (4.9/35)	

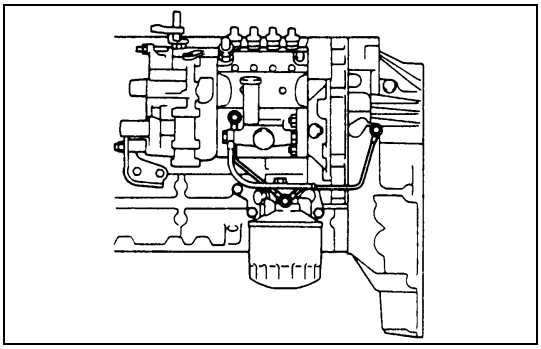

6A3-109-2.tif

17. Oil Pipe

Oil Pipe Joint Bolt Torque	N•m (kg•m/lb•ft)
17 (1.7/12)	

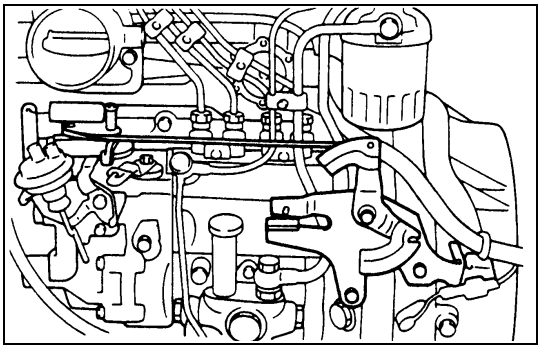

6A3-109-3.tif

16. Engine Control Lever Assembly

Engine Control Lever Bolt Torque	N•m (kg•m/lb•ft)
24 (2.4/17)	

15. Engine Control Wire

14. Driven Plate

13. Clutch Pressure Plate Assembly
Above works refer to “FLYWHEEL AND PILOT BEARING” section in this manual.

12. Cylinder Head Gasket
Above works refer to “CYLINDER HEAD” section in this manual.

11. Cylinder Head Assembly
Above works refer to “CYLINDER HEAD” section in this manual.

10. Camshaft Bearing Lower

9. Camshaft Assembly

8. Camshaft Bearing Upper

7. Camshaft Bearing Cap

6. Valve Cap
Above works refer to “CAMSHAFT ASSEMBLY” section in this manual.

5. Rocker Arm Shaft Assembly
Above works refer to “ROCKER ARM SHAFT ASSEMBLY” section in this manual.

4. **Head Cover Gasket**
   Above works refer to “CYLINDER HEAD” section in this manual.
3. **Cylinder Head Cover**
   Above works refer to “ROCKER ARM SHAFT ASSEMBLY” section in this manual.
2. **Nozzle Cover**
1. **Engine Assembly**
   Above works refer to “ENGINE ASSEMBLY” section in this manual.

CYLINDER BLOCK

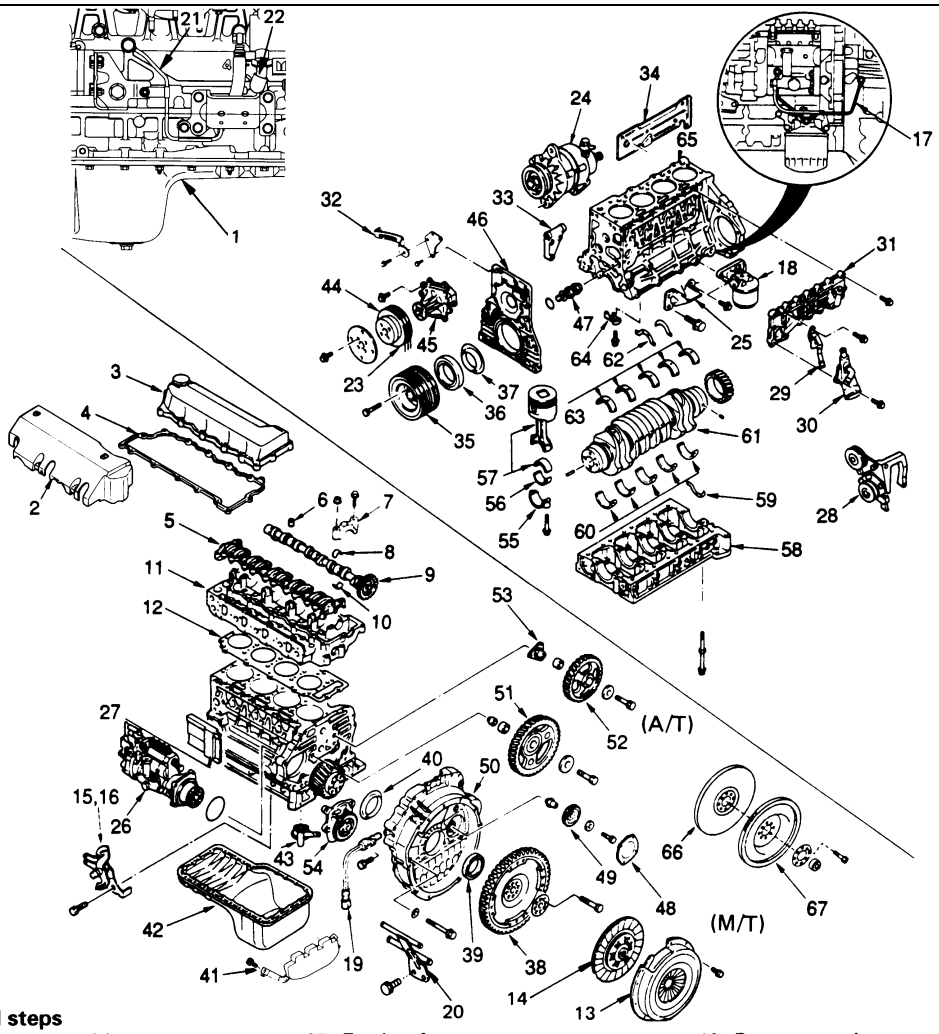

Removal steps

1. Engine assembly
2. Nozzle cover
3. Cylinder head cover
4. Cylinder head cover gasket
5. Rocker arm shaft assembly
6. Valve cap
7. Camshaft bearing cap
8. Camshaft bearing upper
9. Camshaft assembly
10. Camshaft bearing lower
11. Cylinder head assembly
12. Cylinder head gasket
13. Clutch pressure plate assembly
14. Driven plate
15. Engine control wire
16. Engine control lever assembly
17. Oil pipe
18. Oil filter assembly
19. Tachometer sensor
20. Fuel pipe bracket
21. Vacuum pump oil pipe
22. Vacuum pump rubber hose
23. Fan belt
24. Generator
25. Engine foot
26. Injection pump assembly
27. Injection pump rubber spacer
28. Idle pulley bracket
29. Heater pipe
30. Water suction pipe
31. Oil cooler assembly
32. Fan belt adjust plate
33. Generator bracket
34. Cover
35. Crankshaft pulley
36. Crankshaft front oil seal
37. Crankshaft front slinger
38. Flywheel assembly (M/T)
39. Crankshaft rear oil seal
40. Crankshaft rear slinger
41. Spacer rubber
42. Oil pan
43. Oil pump strainer
44. Water pump pulley
45. Water pump
46. Front retainer
47. Oil thermo valve
48. Power steering pump idle gear cover
49. Power steering pump idle gear idle gear
50. Flywheel housing
51. Idle gear A
52. Idle gear B
53. Idle gear B shaft
54. Oil pump assembly
55. Connecting rod cap
56. Connecting rod lower bearing
57. Piston and connecting
58. Crankcase
59. Thrust bearing lower
60. Crankshaft bearing lower
61. Crankshaft assembly
62. Thrust bearing upper
63. Crankshaft bearing upper
64. Piston oil jet
65. Cylinder block
66. Flywheel (A/T)
67. Flexible Plate(A/T)

Installation steps

To install, follow the removal steps in the reverse order.

6A3-111-1.tif

REMOVAL

Preparation

- Disconnect battery ground cable.
- Tilt the cab
- Drain coolant and engine oil

1. **Engine Assembly**

   Above works refer to “ENGINE ASSEMBLY” section in this manual.
2. **Nozzle Cover**
3. **Cylinder Head Cover**
4. **Cylinder Head Cover Gasket**
5. **Rocker Arm shaft Assembly**

   Above works refer to “ROCKER ARM SHAFT ASSEMBLY” section in this manual.
6. **Valve Cap**

   CAUTION:

   Take sufficient care not to let valve caps fall into the gear case or oil return hole.
7. **Camshaft Bearing Cap**
8. **Camshaft Bearing Upper**
9. **Camshaft Bearing Upper**
10. **Camshaft Bearing Lower**

    Above works refer to “CAMSHAFT ASSEMBLY” section in this manual.
11. **Cylinder Head Assembly**

    Above works refer to “CYLINDER HEAD” section in this manual.
12. **Cylinder Head Gasket**
13. **Clutch Pressure Plate Assembly**

    1) Insert the clutch pilot aligner to the clutch assembly.

       Clutch Pilot Aligner: 5-8840-2240-0

    2) Loosen the pressure plate bolts in numerical order a little at a time as shown in the illustration.

    3) Remove the pressure plate assembly.

    For the A/T vehicle, loosen first the flywheel fixing bolt, and then remove the washer, the flexible plate, the flywheel and the sleeve in this order.

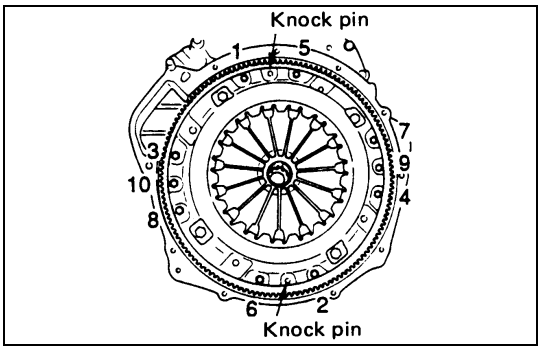

6A3-112-1.tif

14. **Driven Plate**

    Remove the driven plate with the clutch pilot aligner.

    ① Clutch pilot aligner

    ② Clutch pressure plate assembly

    ③ Driven plate

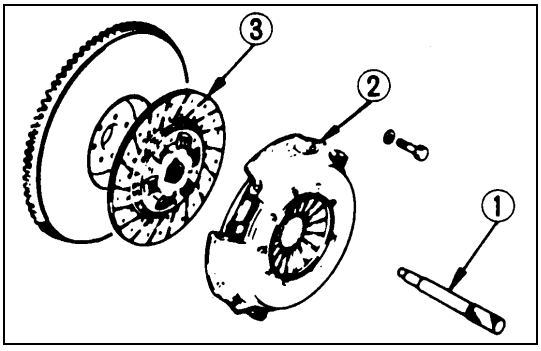

6A3-112-2.tif

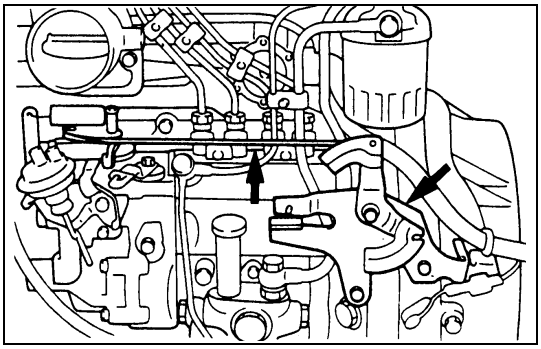

6A3-113-1.tif

15. Engine Control Wire
16. Engine Control Lever Assembly
17. Oil Pipe

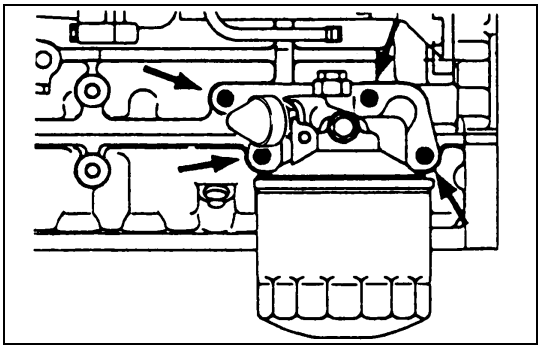

6A3-113-2.tif

18. Oil Filter Assembly
19. Tachometer Sensor
20. Fuel Pipe Bracket

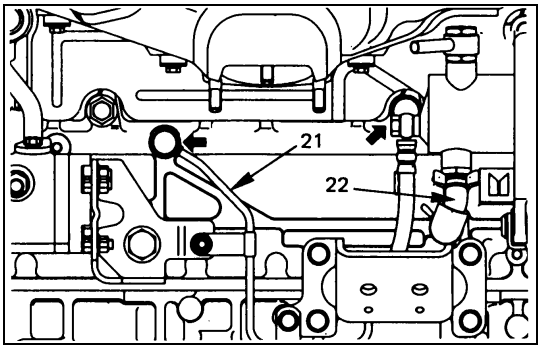

6A3-113-3.tif

21. Vacuum Pump Oil Pipe
22. Vacuum Pump Rubber Hose
23. Fan Belt
24. Generator

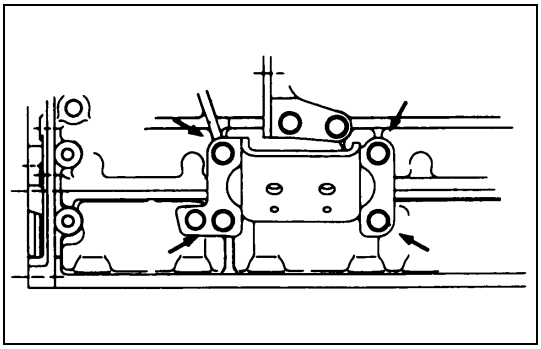

6A3-113-4.tif

25. Engine Foot

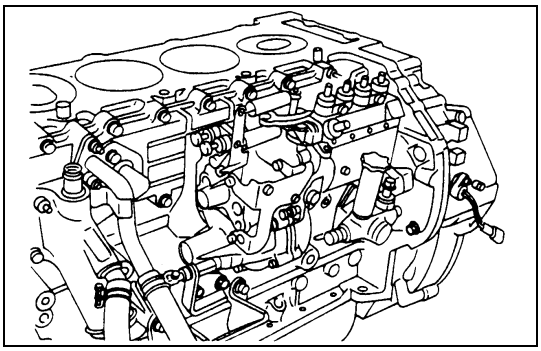

6A3-113-5.tif

26. Injection Pump Assembly
1) Remove the injection pump bracket bolts and the injection pump rear bracket bolts.
2) Then remove the injection pump assembly.

27. Injection Pump Rubber Spacer

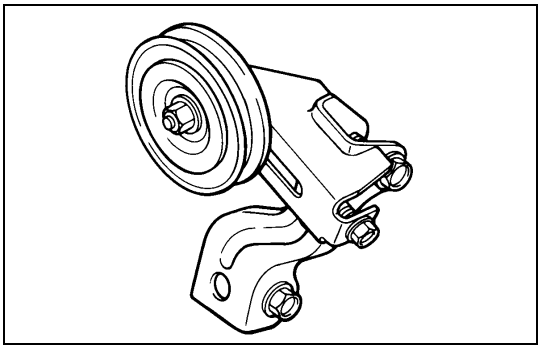

6A3-114-1.tif

28. Idle Pulley Bracket (If equipped with A/C)

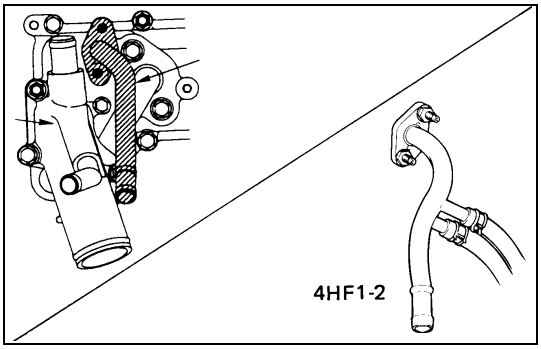

6A3-114-2.tif

29. Heater Pipe

30. Water Suction Pipe

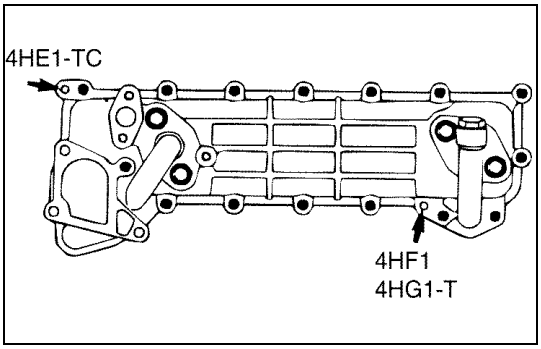

050LX031.tif

31. Oil Cooler Assembly

1) Remove the oil cooler bolts.
2) Install a oil cooler fixing bolt to the oil cooler replacer hole as shown in the illustration, and tighten the bolt alternately a little at a time.

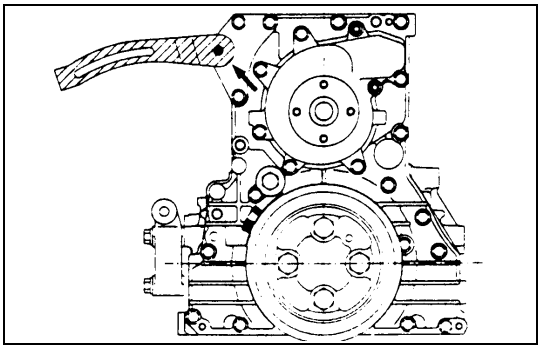

6A3-114-4.tif

32. Fan Belt Adjust Plate

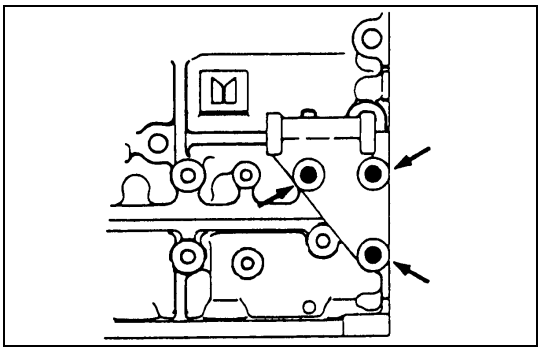

6A3-114-5.tif

33. Generator Bracket

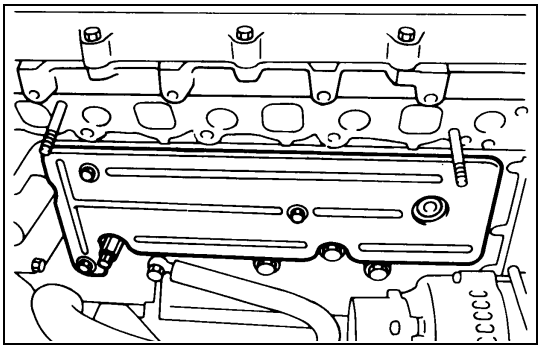

6A3-115-1.tif

34. Cover

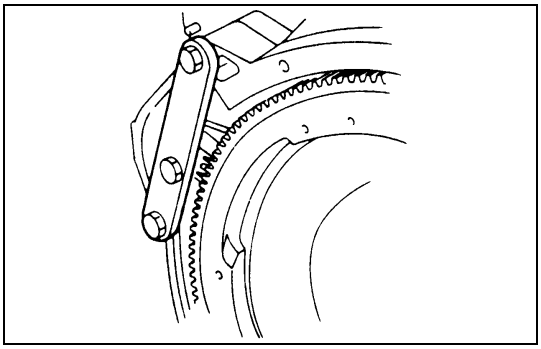

6A3-115-2.tif

35. Crankshaft Damper Pulley

1) Use the crankshaft stopper to prevent the crankshaft from turning.
   Crankshaft Stopper: 5-8840-2230-0
2) Loosen the damper pulley bolts and remove the damper pulley.

36. Crankshaft Front Oil Seal

37. Crankshaft Front Slinger

Above works refer to “CRANKSHAFT FRONT OIL SEAL” section in this manual.

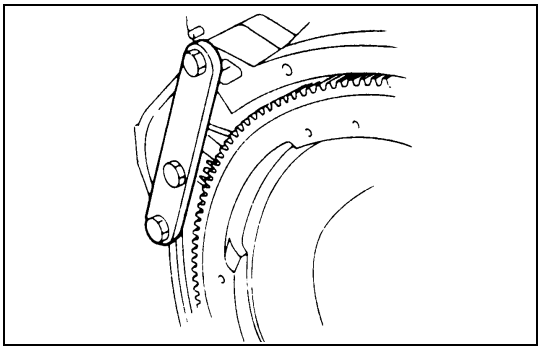

6A3-115-3.tif

38. Flywheel Assembly

1) Use the crankshaft stopper to prevent the crankshaft from turning
   Crankshaft Stopper: 5-8840-2230-0
2) Loosen the flywheel bolts in numerical order a little at a time as shown in the illustration.
3) Remove the flywheel stopper and the flywheel assembly.

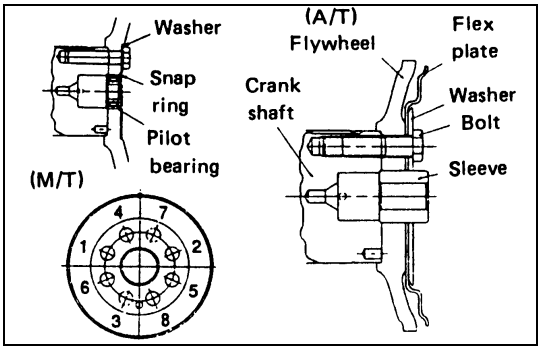

6A3-115-4.tif

For the A/T vehicle, loosen first the flywheel fixing bolt, and then remove the washer, the flexible plate, the flywheel and the sleeve in this order.

39. Crankshaft Rear Seal

40. Crankshaft Rear Slinger

Above works refer to “CRANKSHAFT REAR OIL SEAL” section in this manual.

41. Spacer Rubber (NKR model only)

For the 4WD model vehicle, remove the stiffener before removing the spacer rubber.

42. Oil Pan

43. Oil Pump Strainer

44. Water Pump Pulley

45. Water Pump

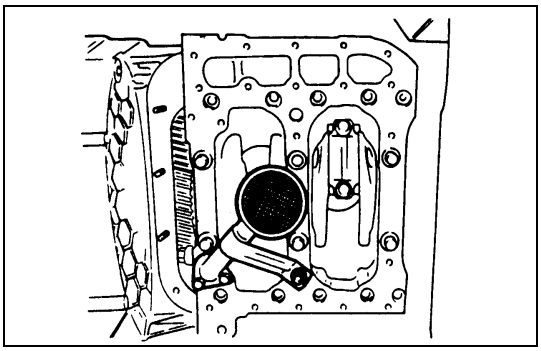

6A3-116-1.tif

46. Front Retainer

Install the three front retainer fixing bolts to the front retainer replacer holes as shown in the illustration, and tighten the bolts alternately a little at a time.

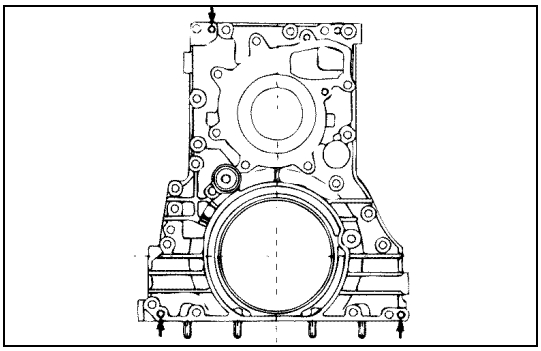

020lx011.tif

45. Oil Thermo Valve (4HF1, 4HF1-2, 4HG1, 4HG1-T)

Pull out the thermo valve from the cylinder body.

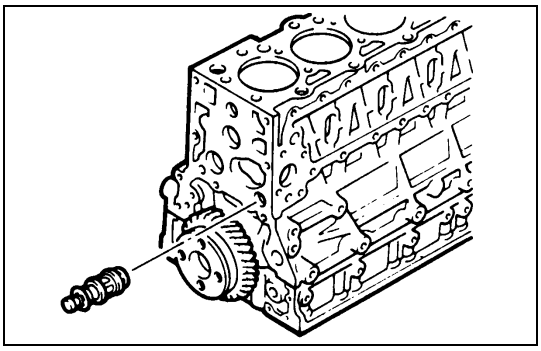

6A3-116-3.tif

45-1. Bypass Valve (4HE1-T, 4HE1-TC)

Pull out the bypass valve from the cylinder body.

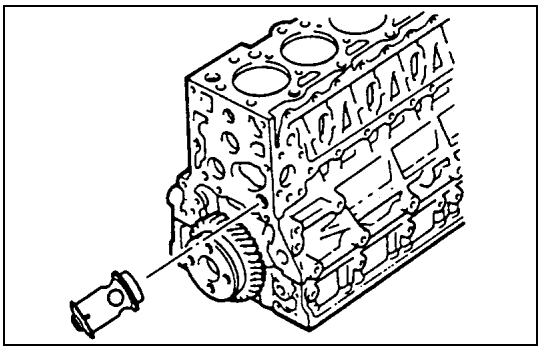

6A46-1-1.tif

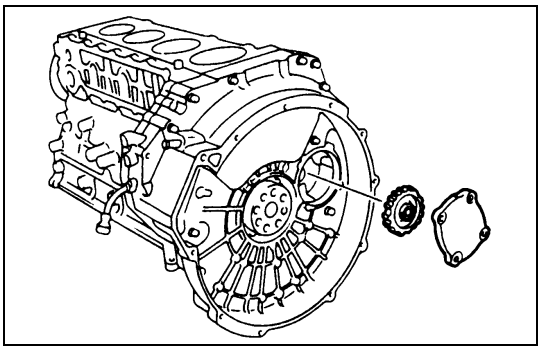

6A3-116-4.tif

48. Power Steering Pump Idle Gear Cover
49. Power Steering Pump Idle Gear

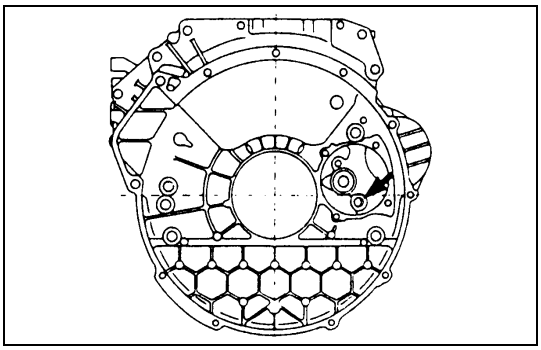

6A3-117-1.tif

50. Flywheel Housing

    NOTE:

    Be careful not to fail to remove the bolts shown in the illustration.

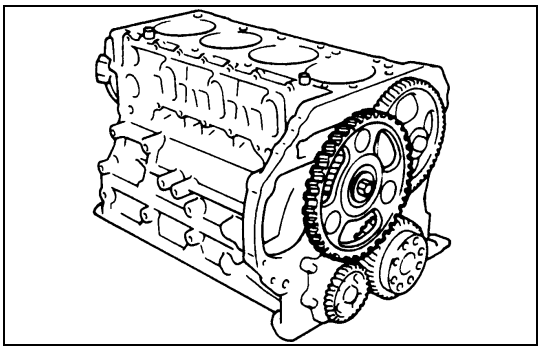

6A3-117-2.tif

51. Idle Gear A

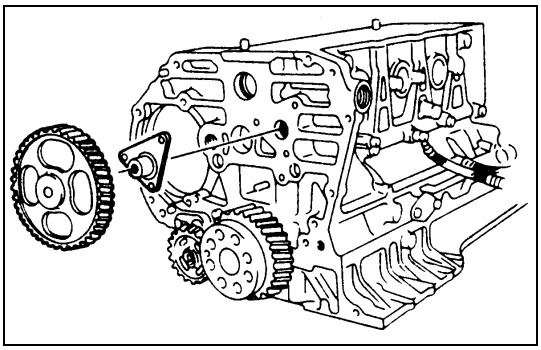

6A3-117-3.tif

52. Idle Gear B
53. Idle Gear B Shaft

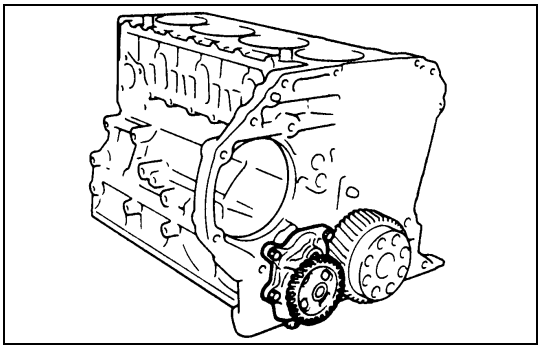

6A3-117-4.tif

54. Oil Pump Assembly

55. Connecting Rod Cap

56. Connecting Rod Lower Bearing

57. Piston and Connecting Rod Assembly

Above works refer to “PISTON AND CONNECTING ROD” section in this manual.

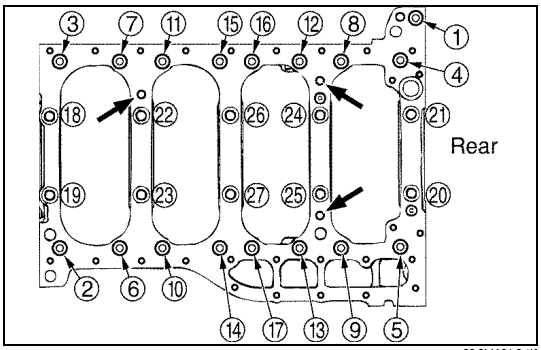

020LX018.tif

58. Crankcase

1) Loosen the crankcase bolts in numerical order a little at a time.
2) Install the three crankcase fixing bolts (See left arrow marks) to the crankcase replacer holes as shown in the illustration, and tighten the bolts alternate a little at a time.

NOTE:

When removing the crankcase, be sure to remove the oil pump and the generator bracket before that.

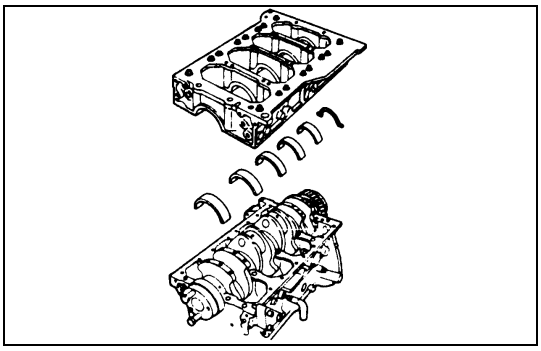
6A3-118-2.tif

59. Thrust Bearing Lower

60. Crankshaft Bearing Lower

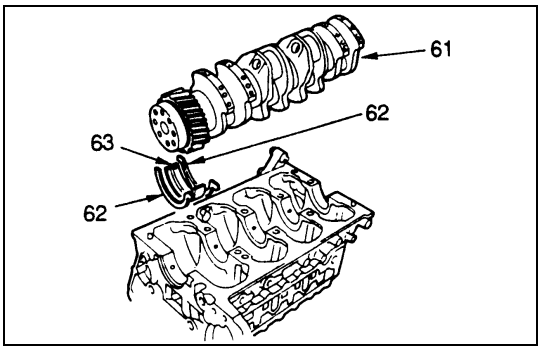

6A3-118-3.tif

61. Crankshaft Assembly

62. Thrust Bearing Upper

63. Crankshaft Bearing Upper

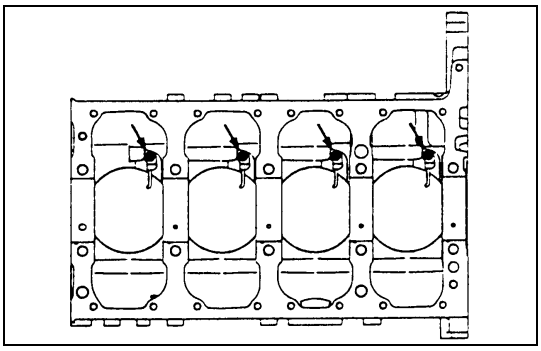
6A3-118-4.tif

64. Oiling Jet

Loosen the check valves to remove both the check valves and the oiling jets.

Take care not to bend or damage the oiling jets.

65. Cylinder Block

INSTALLATION

65. Cylinder Block

Use compressed air to thoroughly clean the inside and outside surfaces of the cylinder body, the oil holes, and the water jackets.

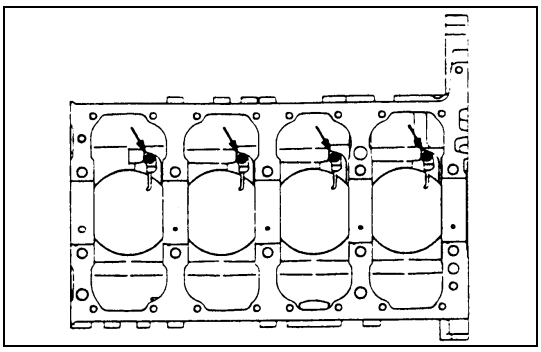

6A3-119-1.tif

64. Oiling Jet

1) Install the oiling jets together with the check valves.
   Take care not to damage the oiling jet nozzles.
2) Tighten the check valves and oiling jets to the specified torque.

Check Valve and Oiling Jet Torque	N•m (kg•m/lb•ft)
21 (2.1/15)	

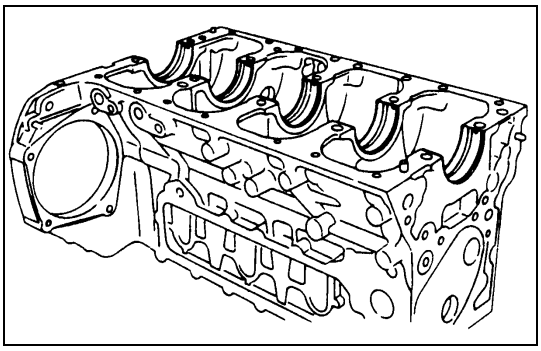

6A3-119-2.tif

63. Crankshaft Bearing Upper

When replacing the crankshaft or the crankshaft bearing with a new one, select the crankshaft bearing according to the respective grades stamped on the crankshaft and the cylinder body.

Refer to the “CRANKSHAFT” in section 6A.

All upper bearings have oil grooves.

1) Carefully wipe any foreign material from the upper bearing.

CAUTION:

Do not apply engine oil to the bearing back faces and the cylinder body bearing fitting surface.

2) Locate the position mark applied at disassembly if the removed upper bearings are to be reused.

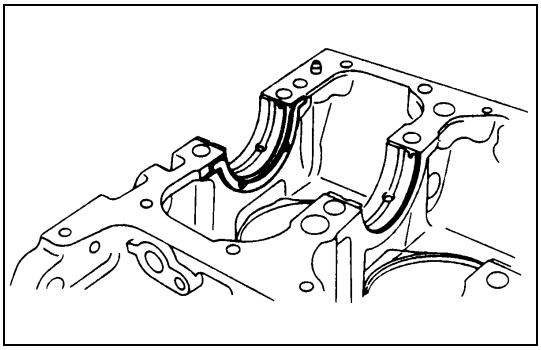

6A3-119-3.tif

62. Thrust Bearing Upper

Install the thrust bearing upper to the front side of the cylinder body No.5 journal. At this time, the thrust bearing upper may be pasted to the cylinder body with grease. However, be sure to wipe off nay excessive grease.

The thrust bearing oil grooves must be facing the sliding faces.

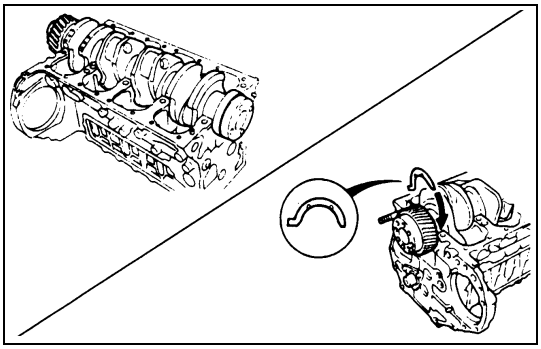

6A3-120-1.tif

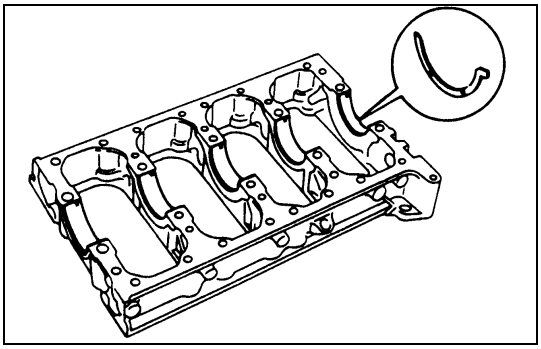

6A3-120-2.tif

61. Crankshaft Assembly

Apply an ample coat of engine oil to the crankshaft journals and the crankshaft bearing surfaces before installing the crankshaft with timing gear.

60. Crankshaft Bearing Lower

All lower bearings does not have oil grooves.

1) Carefully wipe any foreign material from the lower bearing.

CAUTION:

Do not apply engine oil to the bearing back faces and the crankcase bearing fitting surfaces.

2) Locate the position mark applied at disassembly if the removed lower bearings are to be reused.

59. Thrust Bearing Lower

Install the thrust bearing lower to the rear side of the crankcase No.5 journal.

The thrust bearing oil grooves must be facing the sliding faces.

58. Crankcase

1) Apply a 3mm (0.1 inch) bead of recommended liquid gasket (Three Bond 1207C) or its equivalent to the crankcase upper surface as shown in the illustration.
2) Carefully place the crankcase on the cylinder body.

- Install the crankcase within 20 minutes after application of liquid gasket.

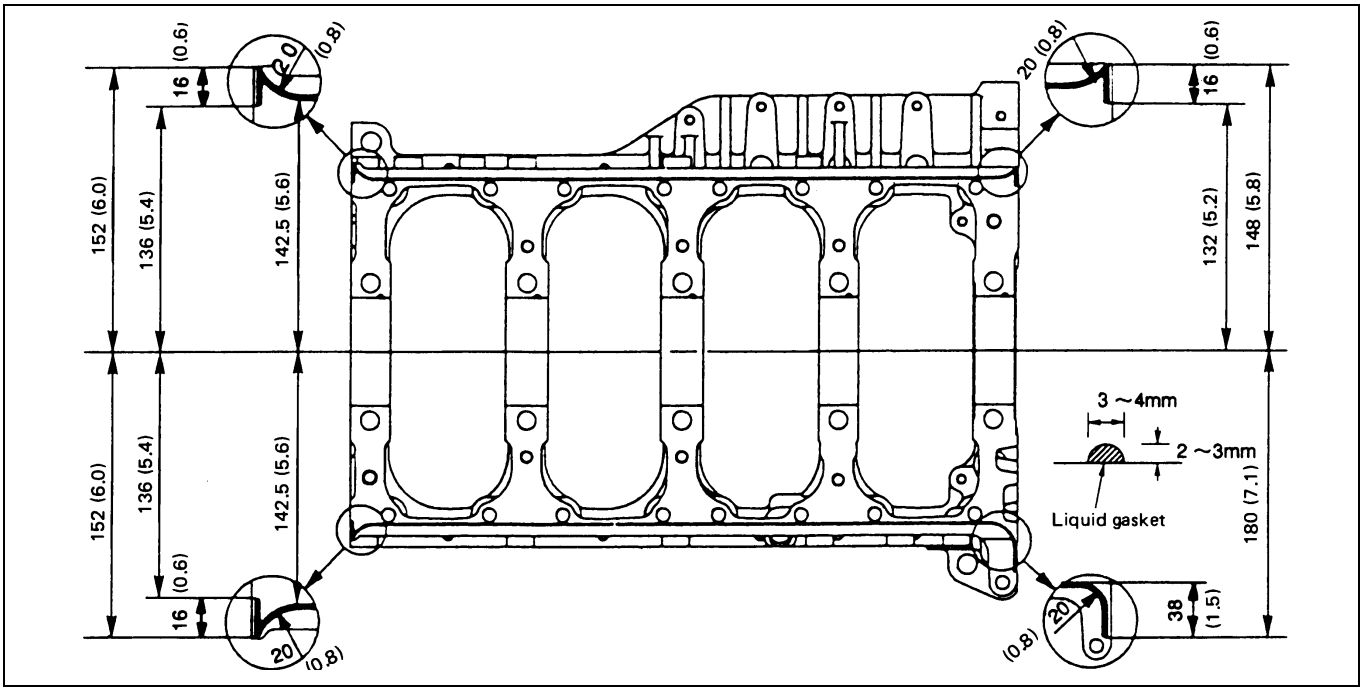

6A3-120-3.tif

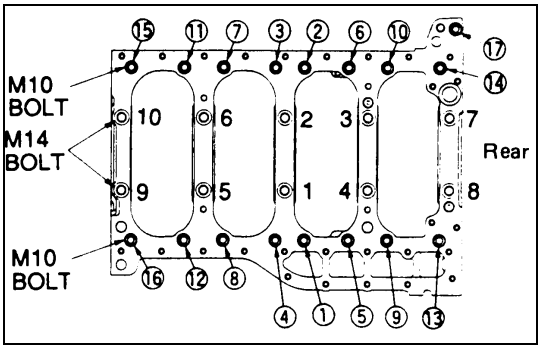

6A3-121-1.tif

3) Tighten the crankcase to the specified torque in the numerical order shown in the illustration.

Crankcase Bolt Torque (M14:1 ~ 10)		N•m (kg•m/lb•ft)
1st step	2nd step	3rd step
98 (10/72)	132 (13.5/98)	30° - 60°

Crankcase Bolt Torque (M10: ① ~ ⑰) N•m (kg•m/lb•ft)
37 (3.8/27)

Angle gauge: 5-8840-0266-0

57. Piston and Connecting Rod Assembly

56. Connecting Rod Bearing

55. Connecting Rod Cap

Above works refer to “PISTON AND CONNECTING ROD” section in this manual.

54. Oil Pump Assembly

Above works refer to “OIL PUMP ASSEMBLY” section in this manual.

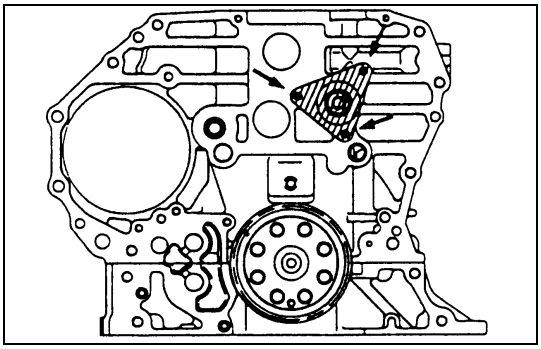

6A3-121-2.tif

53. Idle Gear B Shaft

Idle Gear B Shaft Bolt Torque	N•m (kg•m/lb•ft)
31 (3.2/23)	

Apply the engine oil to the idle gear shaft after installation.

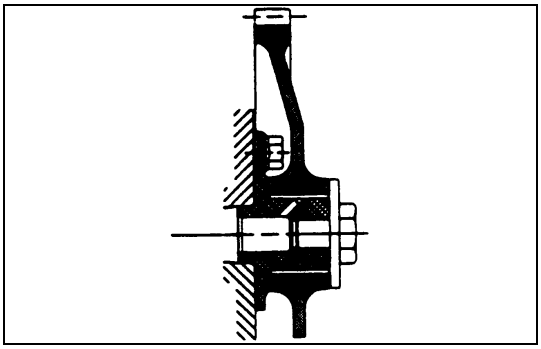

6A3-121-3.tif

52. Idle Gear B

The face of the idle gear B with longer boss should be positioned toward the rear side shown in the illustration

Idle Gear B Bolt Torque	N•m (kg•m/lb•ft)
110(11.2/81)	

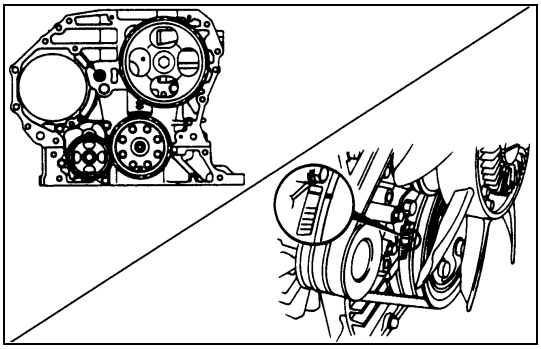

6A3-121-4.tif

51. Idle Gear A

1) Turn the crankshaft clockwise so that the engagement mark of the crankshaft gear faces to the shaft center of the idle gear A and the No.1 cylinder piston comes to the top dead center.
2) Align the crankshaft gear with the engagement mark of the idle gear and install the idle gear A.

Idle Gear A Bolt Torque	N•m (kg•m/lb•ft)
133 (13.6/98)	

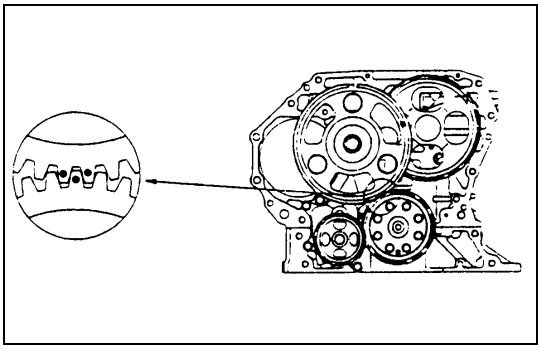

6A3-122-1.tif

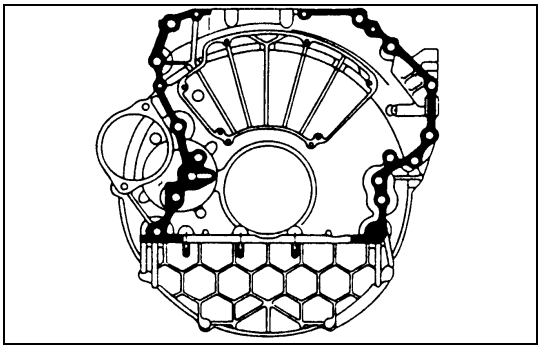

6A3-122-2.tif

50. Flywheel Housing

1) Carefully wipe any foreign material from the cylinder body rear face.
2) Apply the recommended liquid gasket (Three Bond 1207C) or its equivalent to the shaded areas shown in the illustration.

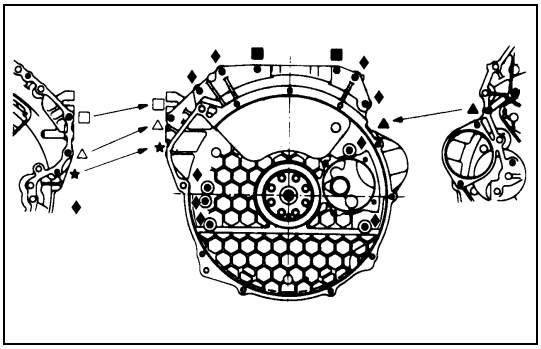

6A3-122-3.tif

3) Align the cylinder body knock pins with the flywheel housing knock pin holes.
4) Tighten the flywheel housing bolts to the specified torque shown in the illustration.

Flywheel Housing Bolt Torque	N•m (kg•m/lb•ft)
♦ :	96 (9.8/71)
★ :	48 (4.9/35)
□ :	94 (9.6/69)
■ :	25 (2.6/19)
△ :	76 (7.7/56)
▲ :	48 (4.9/35)

- Tighten the bolts marked with "△" or "★" from the injection pump side, and those with "▲" from the cylinder body side.

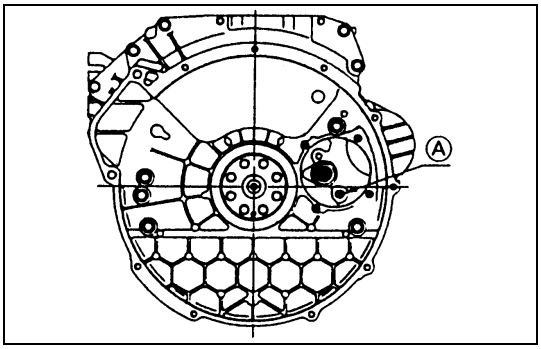

6A3-122-4.tif

Flywheel Housing Bolt Torque	N•m (kg•m/lb•ft)
Ⓐ :	96 (9.8/71)

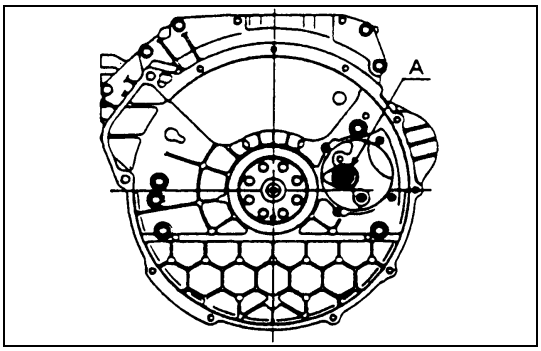

6A3-122-5.tif

49. Power Steering Pump Idle Gear

1) Apply the engine oil to the idle gear shaft.
2) Install the idle gear shaft ① with the idle gear ② to the cylinder body A portion as shown in the illustration.

Idle Gear Shaft Bolt Torque	N•m (Kg•m/lb•ft)
133 (13.6/98)	

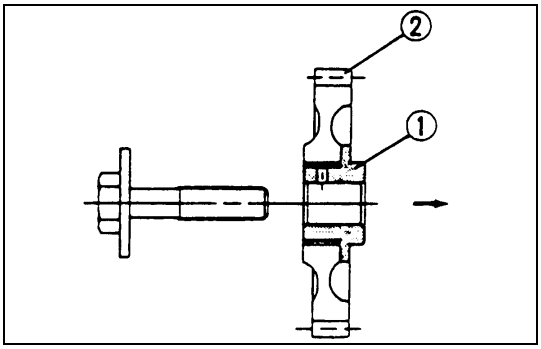

6A3-123-1.tif

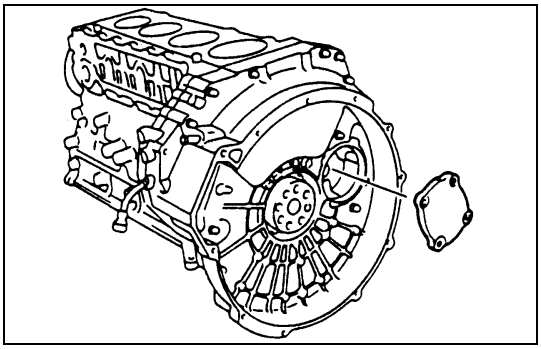

6A3-123-2.tif

48. Power Steering Pump Idle Gear Cover

Install the gear cover with the O-ring.

Gear Cover Bolt Torque	N•m (kg•m/lb•ft)
19 (1.9/14)	

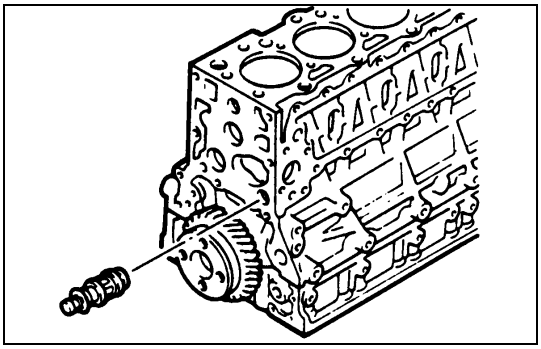

6A3-123-3.tif

47. Oil Thermo Valve (4HF1, 4HF1-2, 4HG1, 4HG1-T)

Insert the oil thermo valve into the cylinder body.

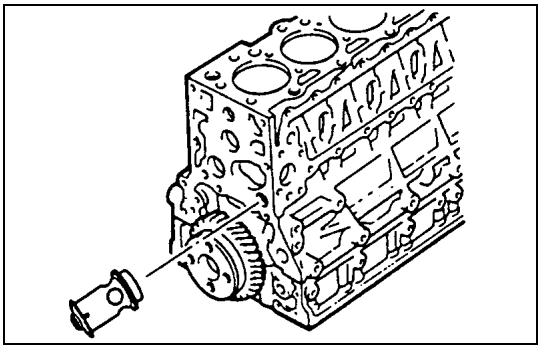

6A3-123-3-1.tif

47-1. Bypass Valve (4HE1-T, 4HE1-TC)

Insert the bypass valve into the cylinder body.

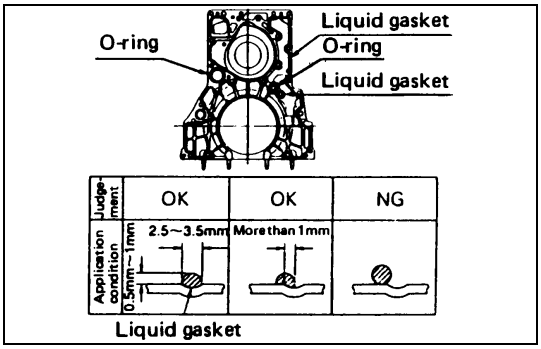

6A3-123-4.tif

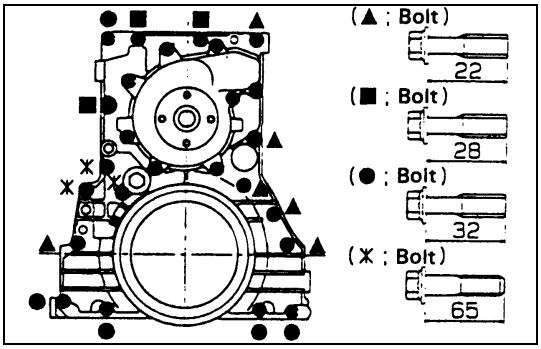

6A3-123-5.tif

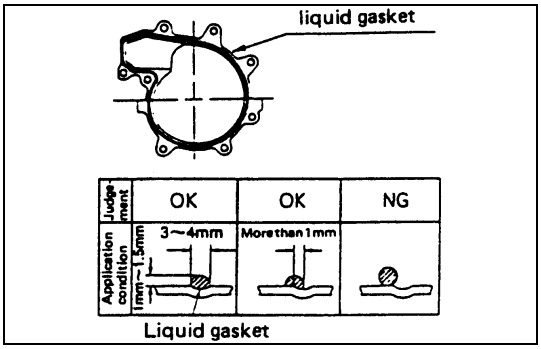

6A3-124-1.tif

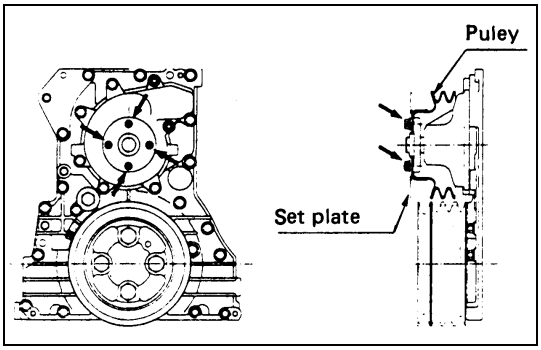

6A3-124-2.tif

46. Front Retainer

1) Carefully wipe any foreign material from the cylinder body front face.
2) Apply a 2.5mm-3.5mm (0.10-0.14 in) bead of the recommended liquid gasket (Three Bond 1207C) or its equivalent on the groove of the front retainer fitting surface shown in the illustration.
3) Install the O-rings (2 pieces) to the front retainer.
   - Install the front retainer within 7 minutes after application of the liquid gasket.
   - For the dislocation of liquid gasket, refer to the illustration.
4) Align the cylinder body knock pins with the front retainer knock pin holes.

Front Retainer Bolt Torque	N•m (kg•m/lb•ft)
24 (2.4/17)	

45. Water Pump Assembly

1) Apply 3mm-4mm bead of the recommended liquid gasket (Three Bond 1207C) or its equivalent on the water pump fitting surface.
2) Install the water pump to the front retainer.

Water Pump Bolt Torque	N•m (kg•m/lb•ft)
24 (2.4/17)	

- Install the water pump within 7 minutes after application of liquid gasket.
- For the dislocation of liquid gasket, refer to the illustration.

CAUTION:

The water pump clamping bolt is also used to tighten the front retainer. So, install the water pump before liquid gasket gets dry immediately after installation of the front retainer.

44. Water Pump Pulley

Water Pump Pulley Bolt Torque	N•m (kg•m/lb•ft)
24 (2.4/17)	

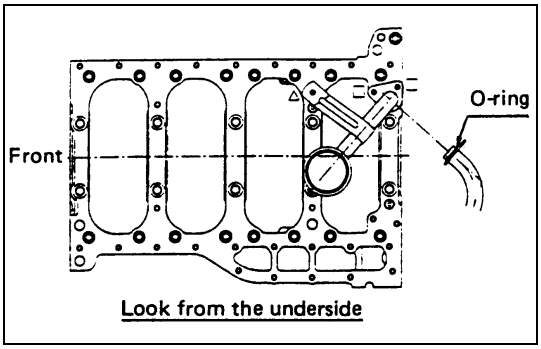

6A3-123-3.tif

43. Oil Pump Strainer

Install the O-ring ① to the oil pump strainer pipe and install the oil pump strainer to the cylinder body shown in the illustration.

Oil Pump Strainer Bolt Torque	N•m (kg•m/lb•ft)
24 (2.4/17)	

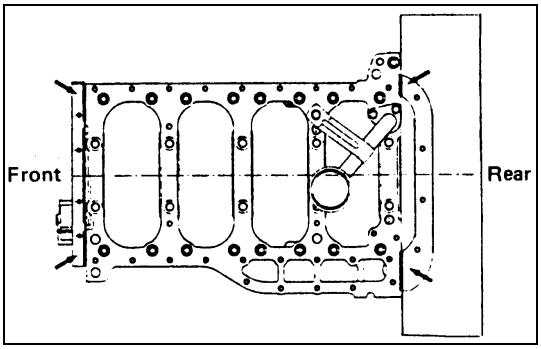

6A3-125-1.tif

42. Oil Pan

1) Apply a 3mm (0.1 inch) bead of recommended liquid gasket (Three Bond 1207C) or its equivalent to the shaded areas shown in the illustration.

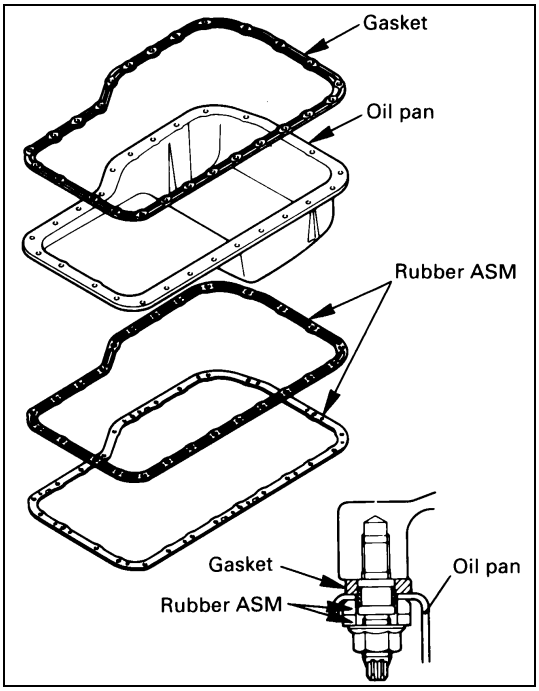

6A3-125-2.tif

Except 4HE1-T, 4HE1-TC

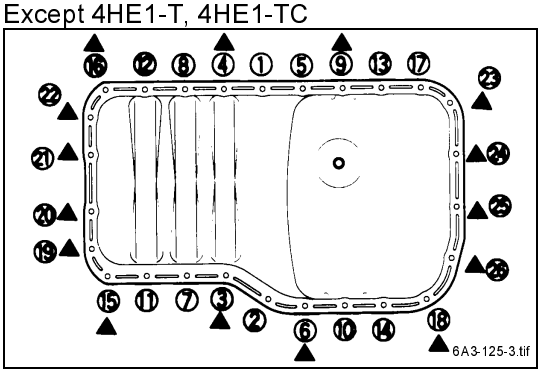

6A3-70-2.tif

2) Tighten the oil pan nuts and bolts to the specified torque in the numerical order as shown in the illustration.

▲ marks are located on nut positions.

Oil Pan Nuts and Bolts Torque	N•m (kg•m/lb•ft)
Others	11 (1.1/8)
4HE1-T 4HE1-TC	24 (2.4/17) 18 (1.8/13) for star mark

For 4HE1-T, 4HE1-TC

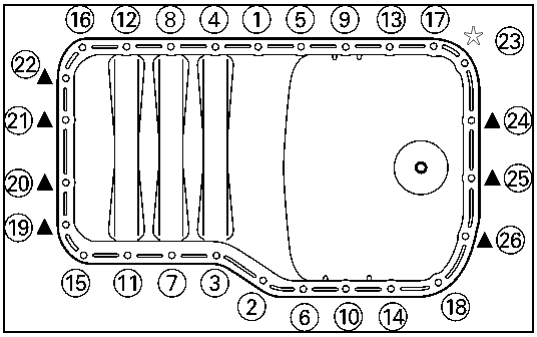

013LX00001.tif

41. Spacer Rubber (NKR model only)

Spacer Rubber Bolt Torque	N•m (kg•m/lb•ft)
76 (7.7/56)	

- For the 4WD model vehicle, tighten the spacer rubber together with the stiffener.

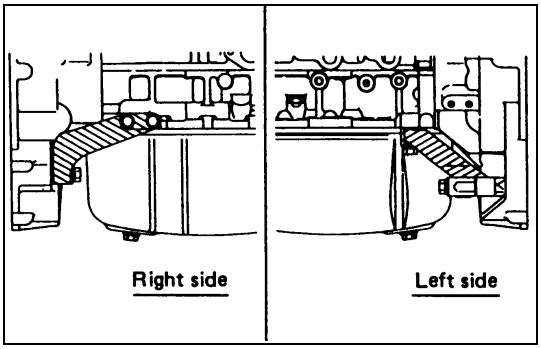

6A3-126-1.tif

Cylinder Body RH Side	N•m (kg•m/lb•ft)
48 (4.9/35)	

Cylinder Body LH Side	N•m (kg•m/lb•ft)
128 (12.9/93)	

Flywheel Housing Side	N•m (kg•m/lb•ft)
76 (7.7/56)	

40. Crankshaft Rear Slinger

39. Crankshaft Rear Oil Seal

Above works refer to “CRANKSHAFT REAR OIL SEAL” section in this manual.

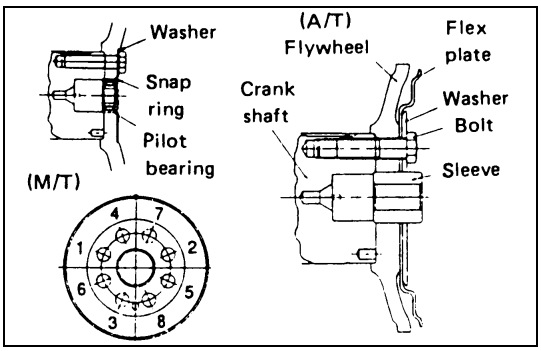

6A3-126-2.tif

38. Flywheel Assembly

1) Align the flywheel with the crankshaft knock pin and temporarily tighten the flywheel bolts.
2) Use the crankshaft stopper to prevent the crankshaft from turning.
   Crankshaft Stopper:5-8840-2230-0
3) Install the washer and the flywheel bolts and tighten to the specified torque in the numerical order show in the illustration.

Flywheel Bolt Torque N•m (kg•m/lb•ft)

1st step	2nd step
78 (8.0/58)	90° - 120°

4) Remove the crankshaft stopper.

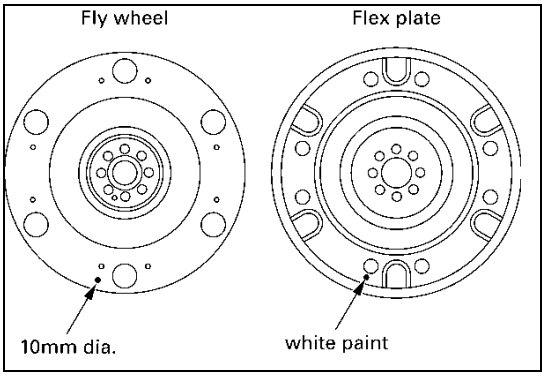

For A/T model

1. Align the knock pin on the crankshaft to install the flywheel.
2. Install the flexible plate with alignment mark (10 mm diameter dent on the flywheel and 10 mm diameter white paint on the flexible plate) and washer.
3. Apply molybdenum disulfide grease to the bolt thread and seat to install the flywheel fixing hole.

   Tighten bolt to two stage tightening method in the numerical order.

   1st step; 78 N•m (58 lbft)

   2nd step; 90 - 120 degrees.

37. Crankshaft Front Slinger

36. Crankshaft Front Oil Seal

Above works refer to “CRANKSHAFT FRONT OIL SEAL” section in this manual.

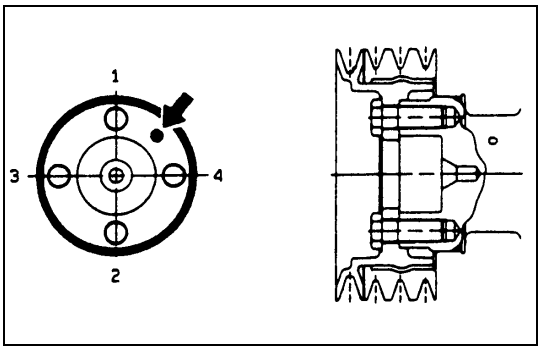

6A3-126-3.tif

35. Crankshaft Damper Pulley

1) Apply a coat of the engine oil to the threads of the bolts.
2) Align the damper pulley with the crankshaft knock pin and tighten the bolts to the specified torque in the numerical order.

Damper Pulley Bolt Torque	N•m (kg•m/lb•ft)
200 (20.4/147)	

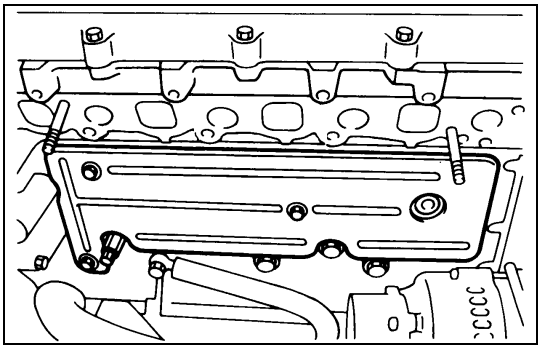

6A3-127-1.tif

34. Cover

Cover Bolt Torque	N•m (kg•m/lb•in)
13 (1.3/113)	

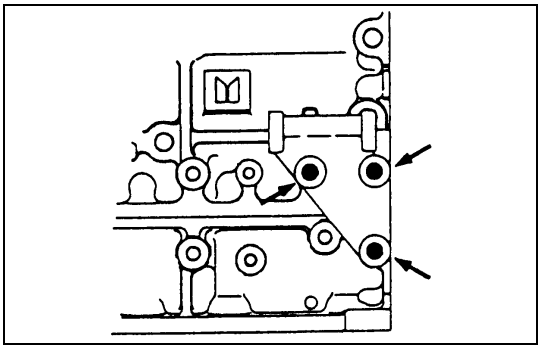

6A3-127-2.tif

33. Generator Bracket

Generator Bracket Bolt Torque	N•m (kg•m/lb•ft)
48 (4.9/35)	

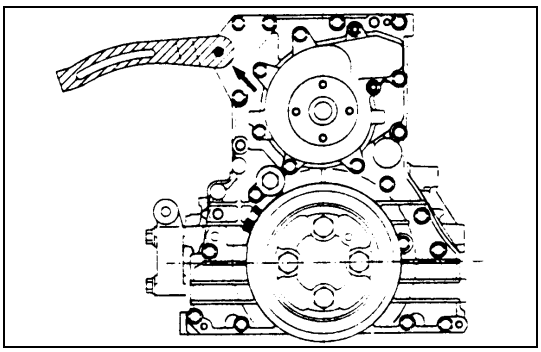

6A3-127-3.tif

32. Fan Belt Adjust Plate

Install the adjust plate and temporarily tighten the adjust plate bolt.

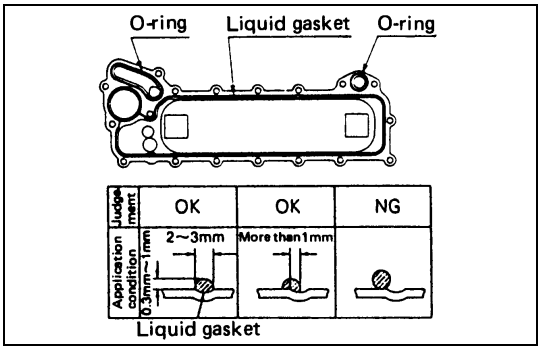

6A3-127-4.tif

31. Oil Cooler Assembly

1) Apply 2mm-3mm bead of the recommended liquid gasket (Three Bond 1207C) or its equivalent on the oil cooler fitting surface.
2) Apply a coat of engine oil to the O-rings (2 pieces) and install the O-rings to the oil cooler.

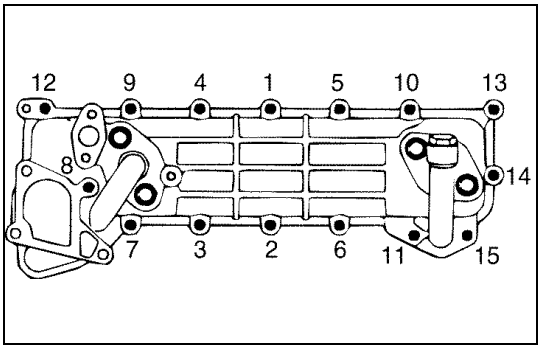

050LX032.tif

NOTE:

Take care that the O-ring does not get smeared with liquid gasket.

- Install the oil cooler within 7 minutes after application of the liquid gasket.
- For the dislocation of the liquid gasket, refer to the illustration.

3) Tighten the oil cooler bolts and nut to the specified torque a little at a time in the sequence shown in the illustration.

Oil Cooler Bolt and Nut Torque	N•m (kg•m/lb•ft)
24 (2.4/17)	

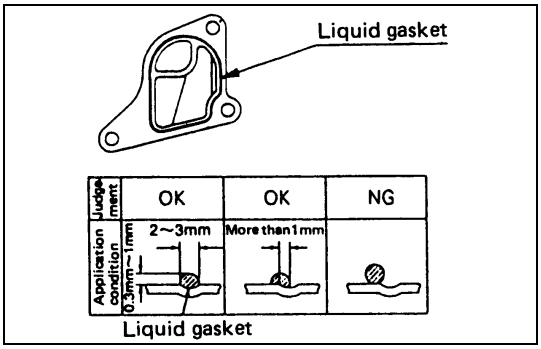

6A3-128-2.tif

30. Water Suction Pipe

1) Apply a 2mm-3mm bead of the recommended liquid gasket (Three Bond 1207C) or its equivalent on the groove of the water suction pipe fitting surface.
2) Install the water suction pipe to the oil cooler.
- For the dislocation of liquid gasket, refer to the illustration.

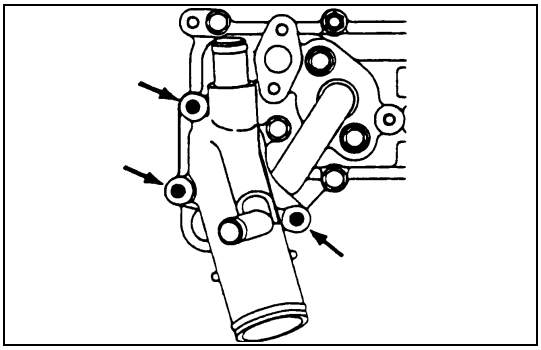

6A3-128-3.tif

Water Suction Pipe Bolt and Nuts Torque

	N•m (kg•m/lb•ft)
24 (2.4/17)	

NOTE:
Install the water suction pipe immediately after the installation of the oil cooler.

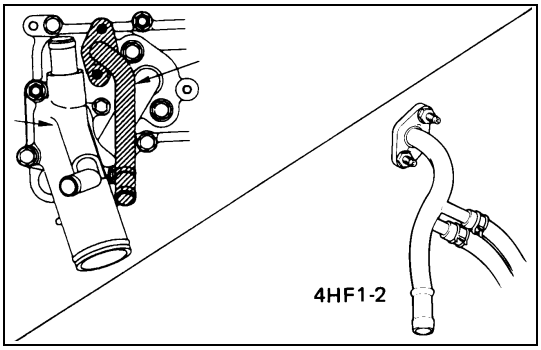

6A3-128-4.tif

29. Heater Pipe

1) Install the O-ring to the heater pipe.
2) Install the heater pipe to the oil cooler.

Heater Pipe Bolt Torque

	N•m (kg•m/lb•ft)
24 (2.4/17)	

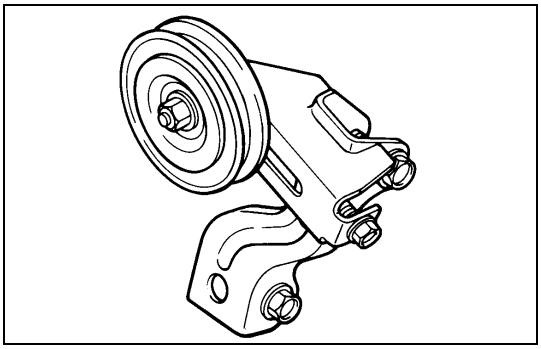

6A3-128-5.tif

28. Idle Pulley Bracket (If equipped with A/C)

Idle Pulley Bracket Bolt Torque

	N•m (kg•m/lb•ft)
48 (4.9/35)	

27. Injection Pump Rubber Spacer

26. Injection Pump Assembly

Above works refer to “INJECTION PUMP ASSEMBLY” section in this manual.

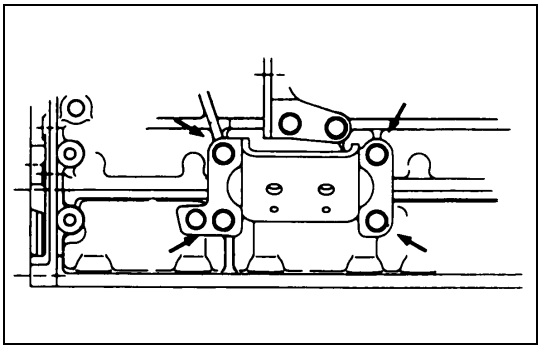

6A3-129-1.tif

25. Engine Foot

Engine Foot Bolt Torque

	N•m (kg•m/lb•ft))
51 (5.2/38)	

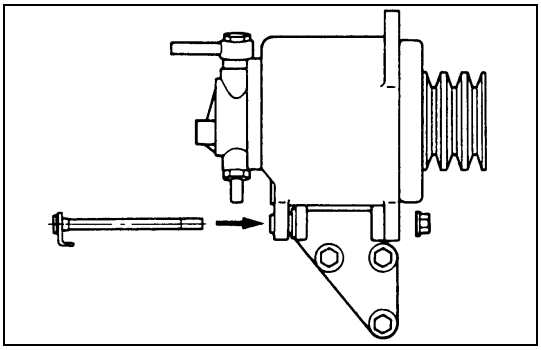

6A3-129-2.tif

24. Generator

NOTE:

When tightening the generator, tighten in advance the fan belt temporarily after its adjustment.

- Insert through the lower fixing bolt from the rear side as shown in the illustration, and tighten it with a nut on the front side.

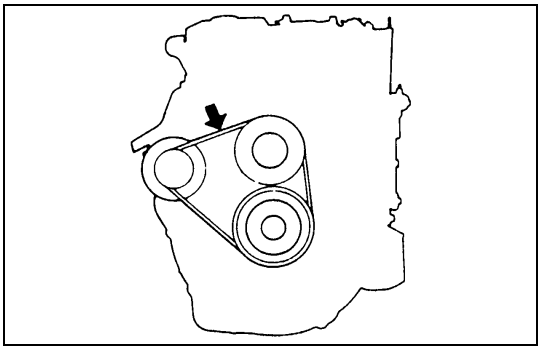

6A3-129-3.tif

23. Fan Belt

Check the drive belt tension.

Depress the drive belt mid-portion with a 98N (10kg/22lb) force.

Drive Belt Deflection	mm (in)
8 - 12 (0.31 - 0.47) ... New belt	
10 - 14 (0.39 - 0.55) ... Reuse belt	

Check the drive belt for cranking and other damage.

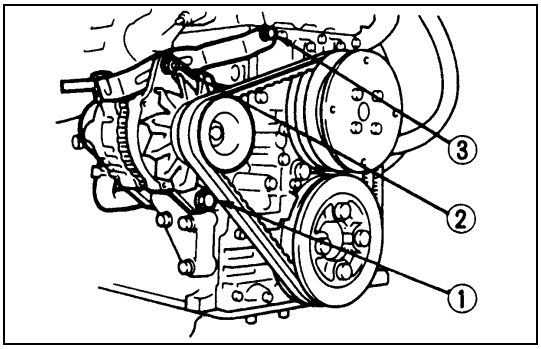

6A3-129-4.tif

Fan Belt Adjustment

Fan belt tension is adjusted by moving the generator.

Torque	N•m (kg•m/lb•ft)
①	40(4.1/30)
②	24(2.4/17)
③	46(4.7/34)

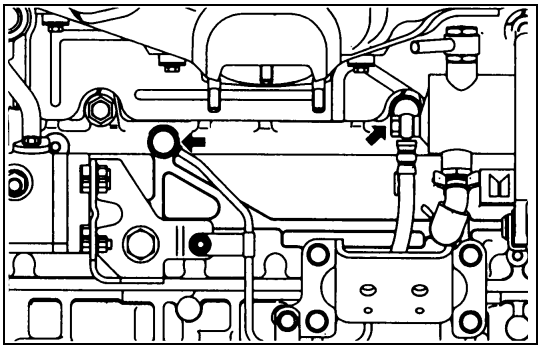
6A3-130-1.tif

22. Vacuum Pump Rubber Hose

21. Vacuum Pump Oil Pipe

Cylinder Body Side	N•m (kg•m/lb•ft)
41 (4.2/30)	

Generator Side	N•m (kg•m/lb•ft)
23 (2.3/17)	

20. Fuel Pipe Bracket

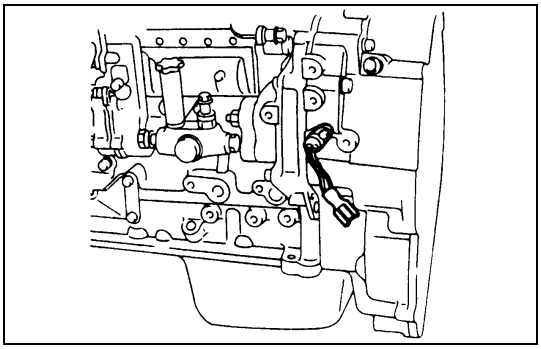
6A3-130-2.tif

19. Tachometer Sensor

Tachometer Bolt Torque	N•m (kg•m/lb•in)
8 (0.8/69)	

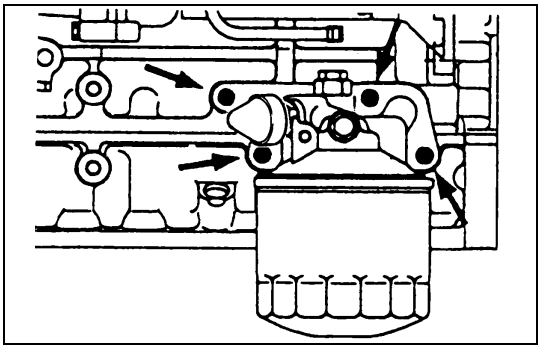
6A3-130-3.tif

18. Oil Filter Assembly

Oil Filter Bolt Torque	N•m (kg•m/lb•ft)
8 (4.9/35)	

17. Oil Pipe

Oil Pipe Joint Bolt Torque	N•m (kg•m/lb•ft)
17 (1.7/12)	

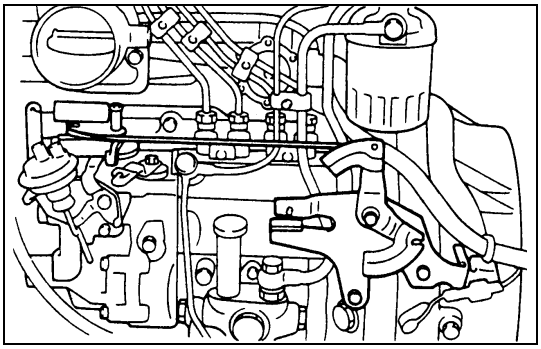
6A3-130-4.tif

16. Engine Control Lever Assembly

Engine Control Lever Bolt Torque	N•m (kg•m/lb•ft)
24 (2.4/17)	

15. Engine Control Wire

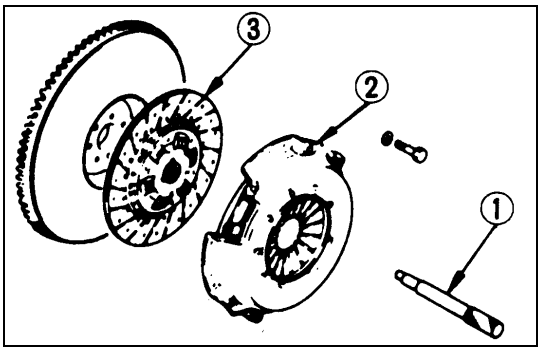

6A3-130-5.tif

14. Driven Plate

Use the clutch pilot aligner to install the driven plate.

Clutch Pilot Aligner: 5-8840-2240-0

① Clutch pilot aligner.

② Clutch pressure plate assembly

③ Driven plate

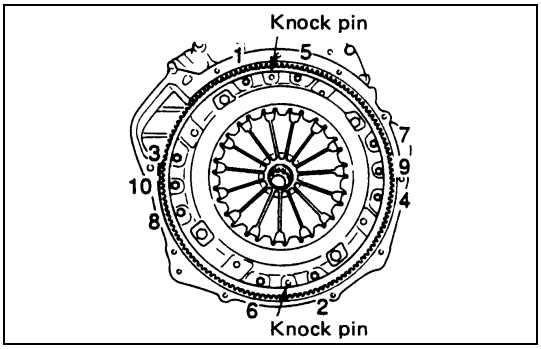

6A3-131-1.tif

13. Clutch Pressure Plate Assembly

1) Align the clutch pressure plate with the flywheel knock pin.
2) Tighten the pressure plate bolts to the specified torque in numerical order.

Clutch Pressure Plate Bolt Torque	N•m (kg•m/lb•ft)
40 (4.1/30)	

12. Cylinder Head Gasket

11. Cylinder Head Assembly

Above works refer to “CYLINDER HEAD” section in this manual.

10. Camshaft Bearing Lower

9. Camshaft Assembly

8. Camshaft Bearing Upper

7. Camshaft Bearing Cap

6. Valve Cap

Above works refer to “CAMSHAFT ASSEMBLY” section in this manual.

5. Rocker Arm Shaft Assembly

Above works refer to “ROCKER ARM SHAFT ASSEMBLY” section in this manual.

4. Head Cover Gasket

Above works refer to “CYLINDER HEAD” section in this manual.

3. Cylinder Head Cover

1) Install the cylinder head cover.
2) Tighten the cylinder head cover nuts and bolts to the specified torque in the numerical order shown in the illustration.

Cylinder Head Cover Nut and Bolt Torque	N•m (kg•m/lb•ft)
18 (1.8/13)	

2. Nozzle Cover

1. Engine Assembly

Above works refer to “ENGINE ASSEMBLY” section in this manual.

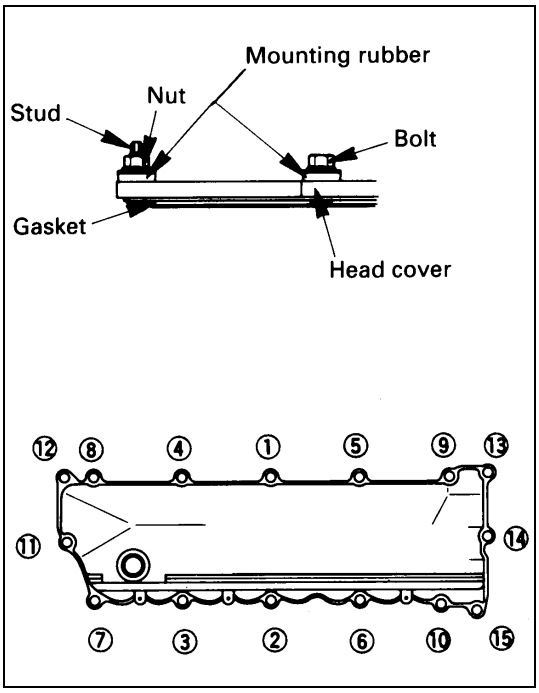

6A3-131-2.tif

ENGINE ASSEMBLY
(Transmission side)

(Manual transmission models only)

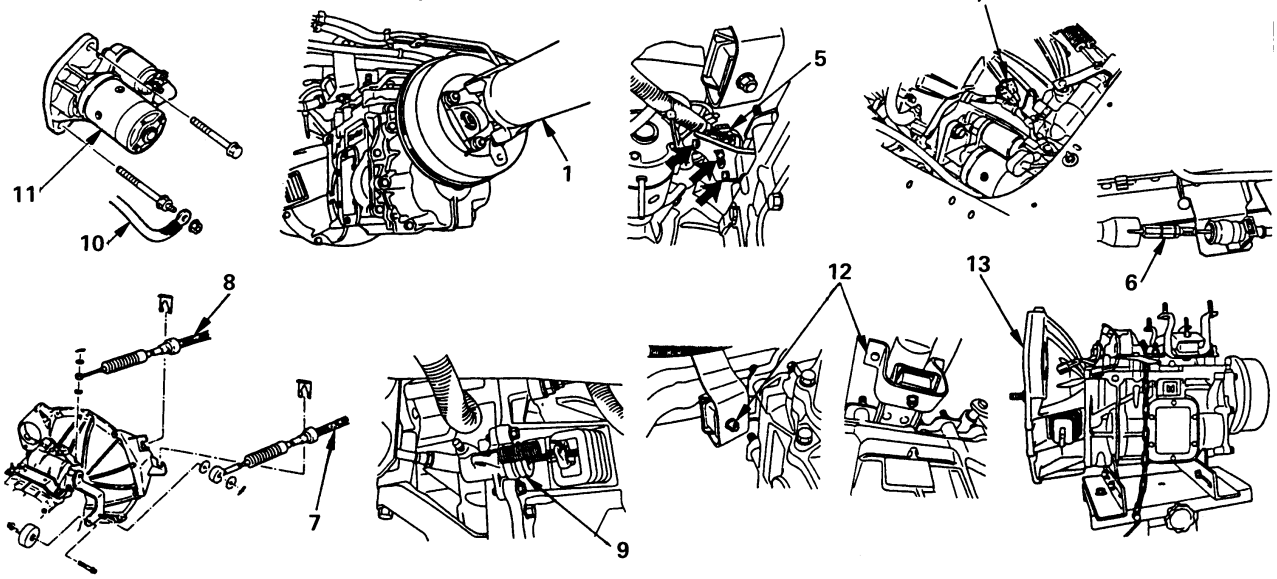

(Automatic Transmissionmodels only)

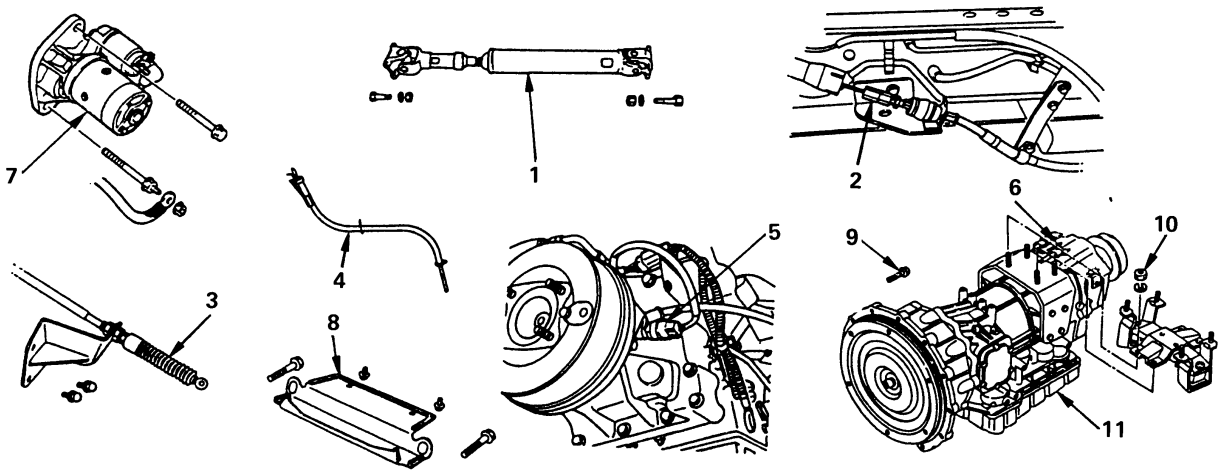

Removal steps (Manual Transmission)
1. Propeller shaft assembly
2. Car speed sensor connector
3. Neutral switch connector
4. Back-up lamp connector
5. Harness connector
6. Parking brake cable
7. Shift cable
8. Select cable
9. Clutch slave cylinder assembly
10. Starter earth cable
11. Starter
12. Transmission mounting unit
13. Transmission assembly

Removal steps (Automatic Transmission)
1. Propeller shaft assembly
2. Parking brake cable
3. Control cable
4. Oil level gauge
5. Harness connector
6. ATF cooler pipe
7. Starter
8. Under cover
9. Torque converter bolt
10. Transmission mounting
11. Transmission assembly

Installation steps
To install, follow the removal steps in the reverse order.

6A3-132-1.tif

REMOVAL

Preparation

- Disconnect battery ground cable
- Tilt the cab
- Transmission cover
- Drain coolant

(Manual Transmission)

1. **Propeller shaft Assembly**
   1) Put in advance an alignment mark to the drum and the flange yoke.
   2) Put the drum and the flange yoke aside and hang them with a wire so that they do not interfere with servicing work.
2. **Car Speed Censer Connector**
3. **Neutral Switch Connector**
4. **Back-up Lamp Connector**
5. **Harness Connector**
   Remove the connectors from the harness bracket. At that time, take care not to cause any damages to the clips.

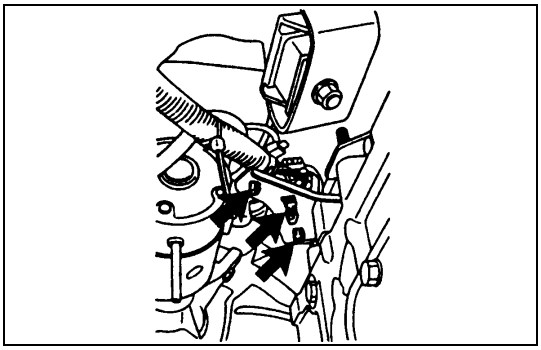

6A3-133-1.tif

6. **Parking Brake Cable**
   Remove the clip and slide the cover provided in the middle of the cable. Then, loosen the longer nut on the front side of the vehicle to disconnect the parking brake cable.
7. **Shift Cable**
8. **Select Cable**

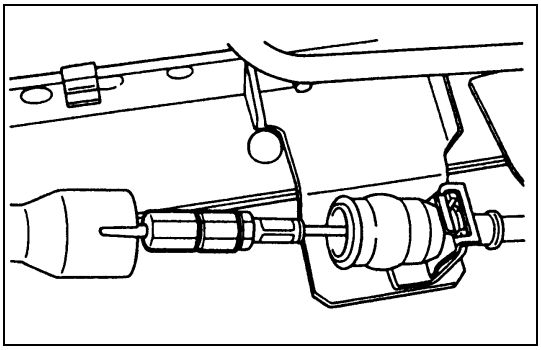

6A3-133-2.tif

9. **Clutch Slave Cylinder**
   1) Disconnect the clutch return spring from the clutch slave cylinder.
   2) Remove the slave cylinder from the clutch shift fork.
10. **Starter Earth Cable**
11. **Starter**
    1) Disconnect the battery cable at the starter motor.
    2) Remove the starter assembly from flywheel housing.

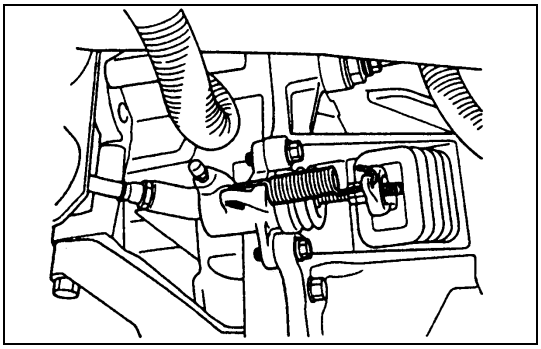

6A3-133-3.tif

12. Transmission Mounting Nut

1) Check that the engine lifting is securely supporting the engine.
2) Remove the engine rear mounting bracket nuts from the No.3 crossmember.

13. Transmission Assembly

Remove the transmission nuts and bolts from the flywheel housing.

- Remove the transmission by pulling it toward the rear of the vehicle while slowly lowering the transmission jack.

(Automatic Transmission)

- Drain Automatic transmission fluid.

1. Propeller Shaft Assembly

1) Put an alignment mark in advance to the drum and the flange yoke.
2) Put the drum and the flange yoke aside and hang them with a wire so that they do not interfere with servicing work.

2. Parking Brake Cable

Remove the clip and slide the cover provided in the middle of the cable. Then, loosen the longer nut on the front side of the vehicle to disconnect the parking brake cable.

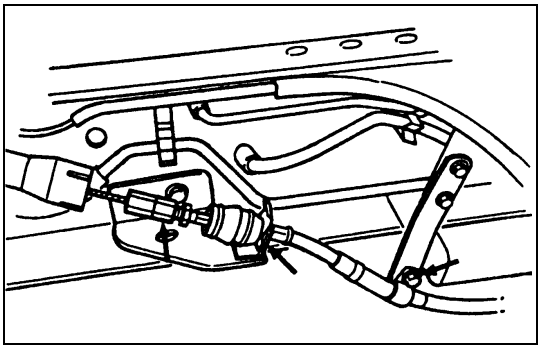

6A3-134-1.tif

3. Control Cable

1) Disconnect the control cable from the lever.
2) Remove the control cable bracket from the transmission.

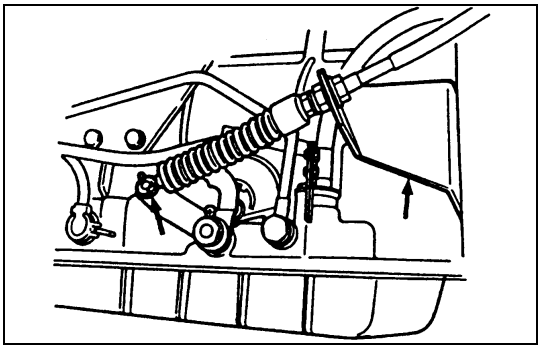

6A3-134-2.tif

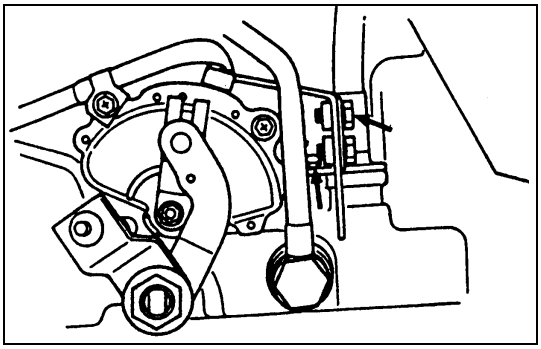

6A3-135-1.tif

4. Oil Level Gauge

1) Remove the fixing bolts of the oil filler and the protector.
2) Remove the oil filler bolt.
3) Remove the bolt that tightens the oil filler and the housing.

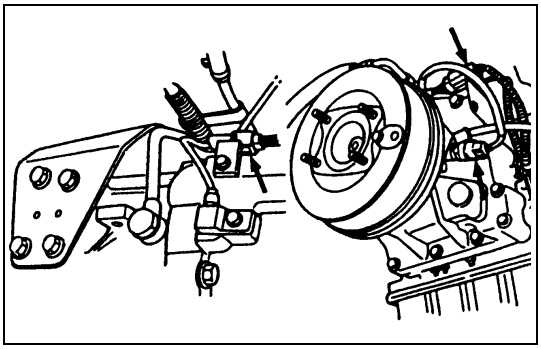

6A3-135-2.tif

5. Harness Connector

1) Disconnect the speedometer sensor harness connector.
2) Remove the connector protector.
3) Remove the inhibitor switch and disconnect the solenoid harness connector.
4) Disconnect the A/T vehicle speed sensor harness connector.

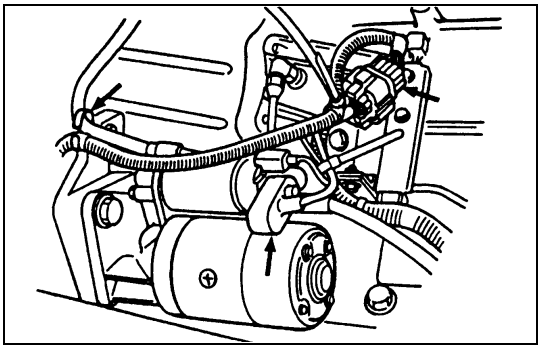

6A3-135-3.tif

5) Disconnect the harness connector from the transmission upper bracket.

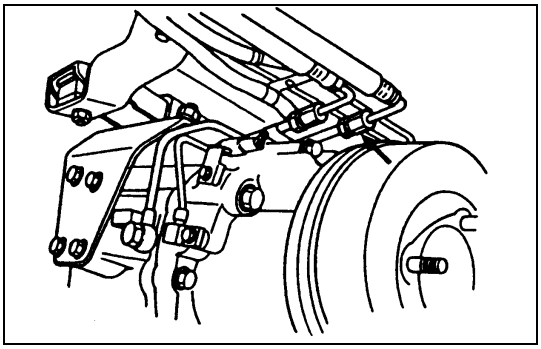

6A3-135-4.tif

6. ATF Cooler Pipe

Disconnect the harness connector from the transmission upper bracket.

7. Starter

1) Disconnect the battery cable at the starter motor.
2) Remove the starter assembly from flywheel housing.

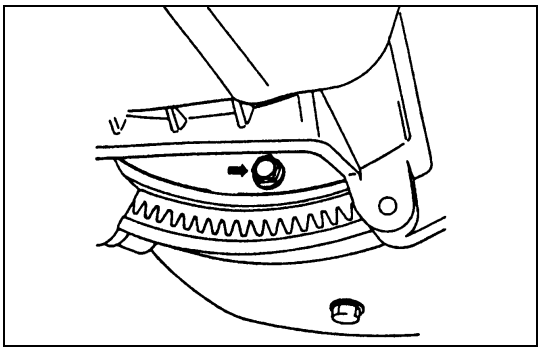

6A3-135-5.tif

8 Under Cover

9. Torque Converter Bolt

1) Remove the under cover from the lower section of the housing.
2) Remove the 6 torque converter bolts while turning the flywheel.

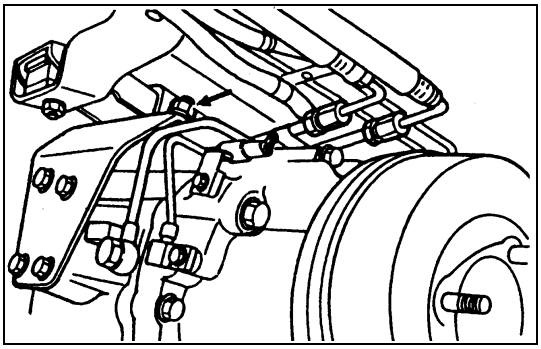

6A3-136-1.tif

10. Transmission Mounting Nut

1) Check that the engine lifting is securely supporting the engine.
2) Remove the engine rear mounting bracket nuts from the No.3 crossmember.

11. Transmission Assembly

1) Remove the transmission nuts and bolts from the flywheel housing.
2) Remove the transmission by pulling it toward the rear of the vehicle while slowly lowering the transmission jack.

NOTE:

Hold up a little the front section of the transmission so that the torque converter does not get off.

(Engine left side)

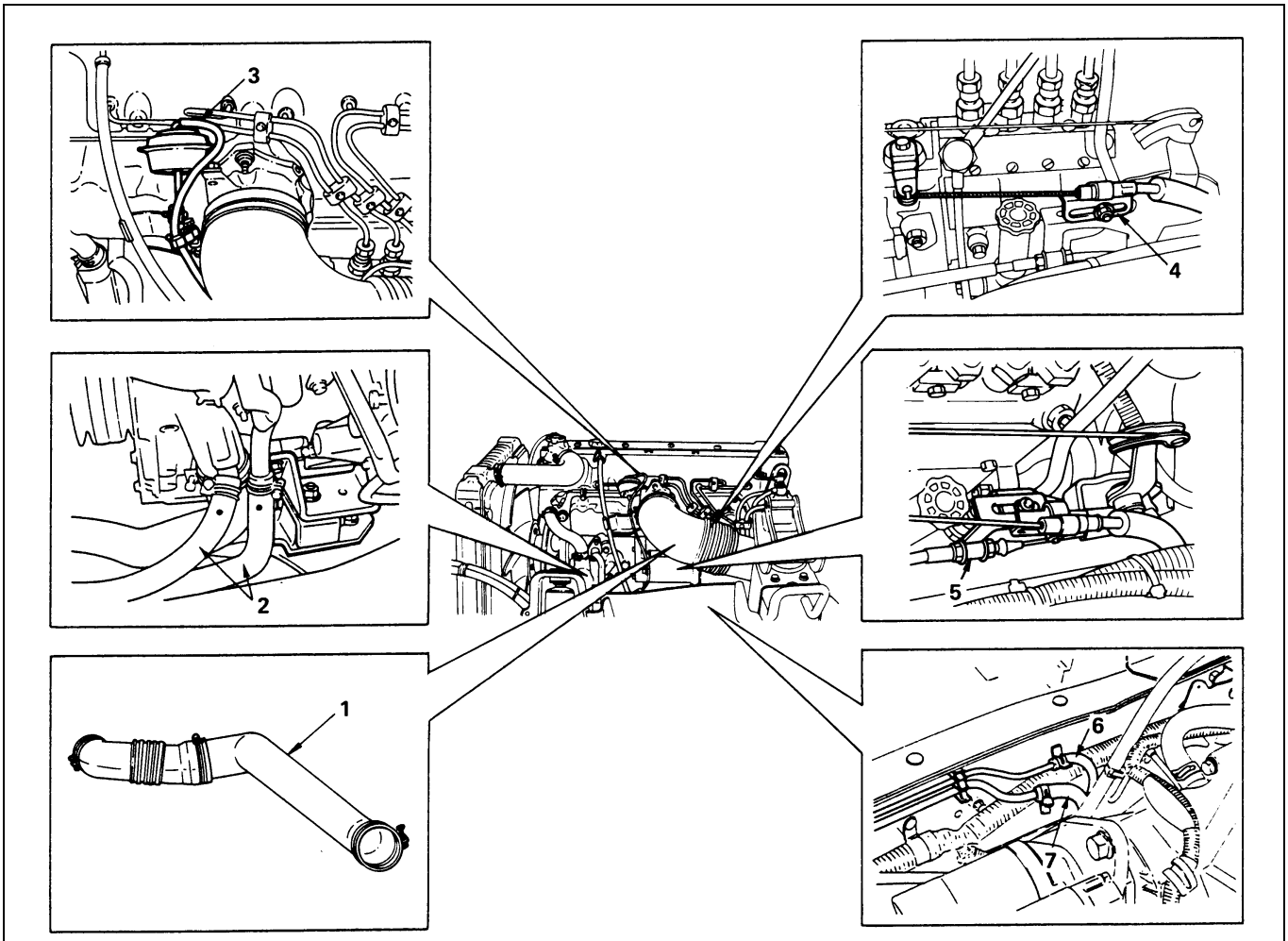

Removal steps

1. Intake air duct
2. Heater hose
3. Vacuum hose
4. Engine stop cable
5. Accelerator control cable
6. Fuel return hose
7. Fuel feed hose

Installation steps

To install, follow the removal steps in the reverse order.

6A3-136-2.tif

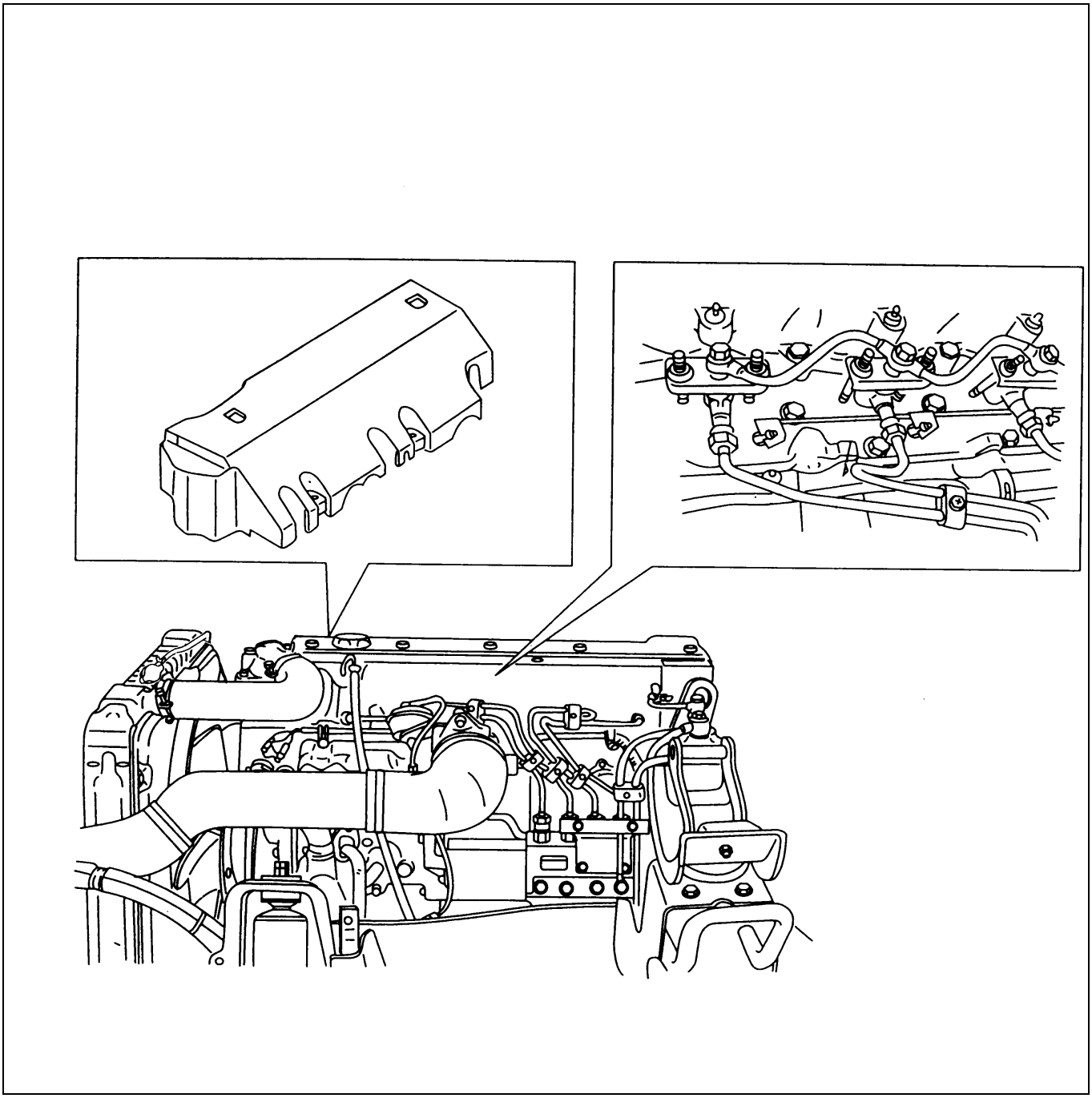

6A3-137-1.tif

REMOVAL

1. **Intake Air Duct**
2. **Heater Hose**
3. **Vacuum Hose**
4. **Engine Stop Cable**
   Loosen locking nut at bracket and disconnect engine stop cable from injection pump stop lever.
5. **Accelerator Control Cable**
   Loosen locking nut at bracket and disconnect accelerator control cable from injection pump control lever.
6. **Fuel Return Hose**
7. **Fuel Feed Hose**
   Disconnect fuel hose from injection pump side and take care not to spill and enter dust.

(Engine front side)

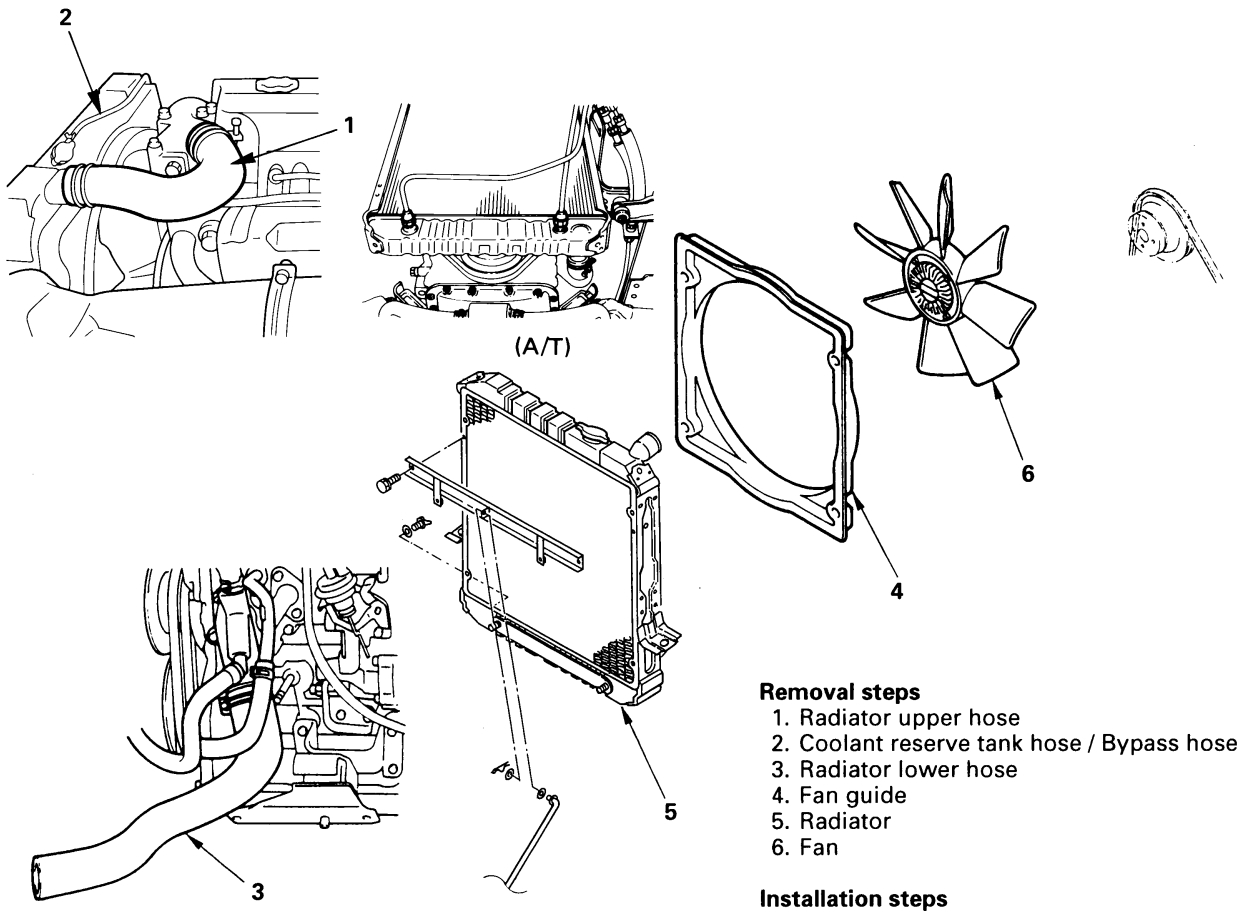

Removal steps
1. Radiator upper hose
2. Coolant reserve tank hose / Bypass hose
3. Radiator lower hose
4. Fan guide
5. Radiator
6. Fan

Installation steps
To install, follow the removal steps in the reverse order.

6A3-138-1.tif

REMOVAL

1. **Radiator Upper Hose**
2. **Coolant Reserve Tank Hose/Bypass Hose**
3. **Radiator Lower Hose**
4. **Fan Guide**
5. **Radiator**
   For the A/T model vehicle, remove the oil cooler pipe.
6. **Fan**

(Engine right side)

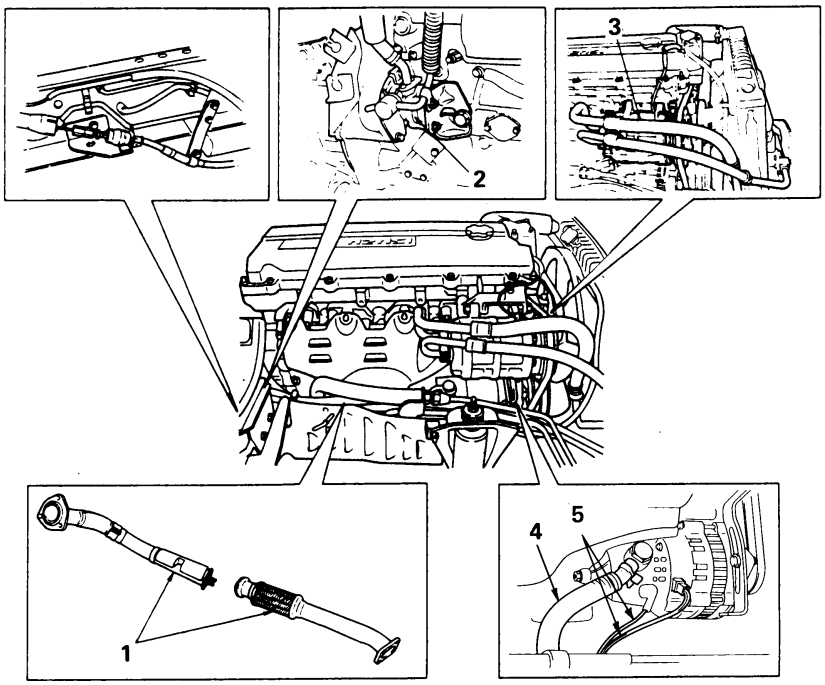

Removal steps
1. Front exhaust pipe
2. Power steering pump
3. A/C compressor
4. ACG vacuum hose
5. ACG harness

Installation steps
To install, follow the removal steps in the reverse order.

6A3-139-1.tif

REMOVAL

1. **Front Exhaust Pipe**
2. **Power Steering Pump**
   Remove the power steering pump from the engine side with the bracket attached, and fasten it with a wire to the appropriate location, together with the hoses.
3. **Air Conditioning (A/C) Compressor (If equipped with A/C)**
   1) Remove the A/C compressor drive belt.
   2) Dismount the compressor from the A/C compressor bracket, and fasten it with a wire to the appropriate location, together with the hoses.

4. **ACG Vacuum Hose**
   Disconnect the vacuum hoses from vacuum pump side.
5. **ACG Harness**
   Disconnect the B terminal cable and harness connector from generator.

(Engine mounting side)

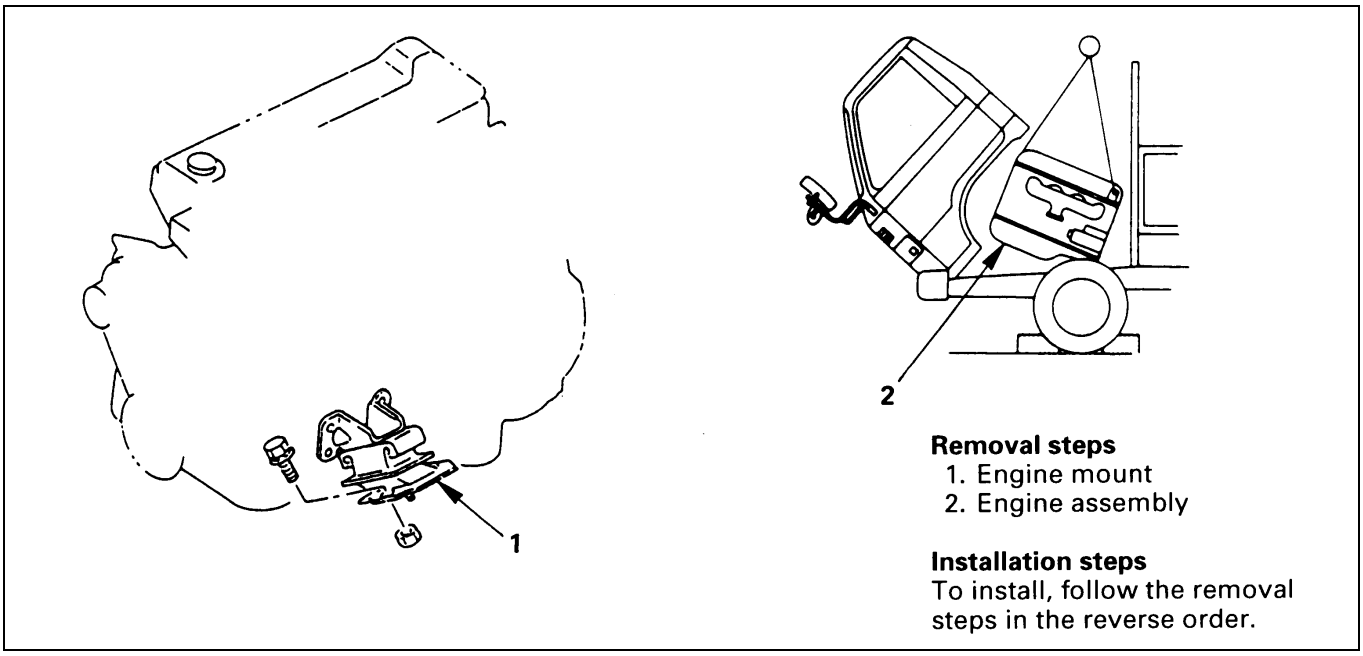

6A3-140-1.tif

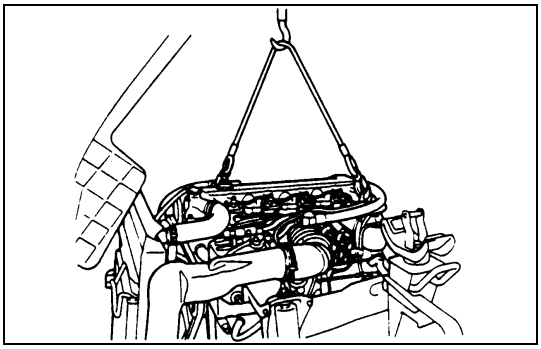

6A3-140-2.tif

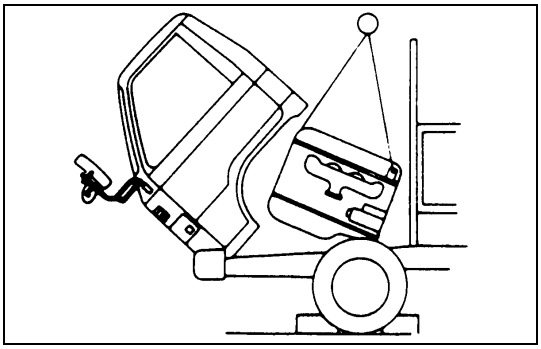

6A3-140-3.tif

REMOVAL

1. **Engine Mount**
   Attach lifting wires to the engine lifting hangers and slightly raise the engine.
   Remove the engine mounting rubber nuts attaching the engine mounting crossmembers.

2. **Engine Assembly**
   1) Make sure that the connecting pipes, hoses, and cables have all been removed from the engine.
   2) Operate the hoist to slowly raise the engine until it is clear of the chassis frame.

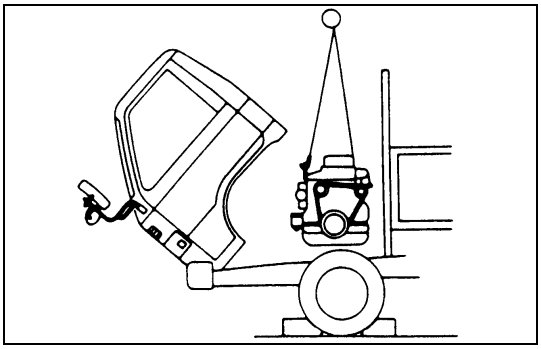
6A3-141-1.tif

3) Rotate the engine 90 degrees.
4) Continue to lift the engine from the chassis.
5) Carefully move the hoist and engine.
6) Set the engine on an engine stand.

INSTALLATION

(Engine mounting side)

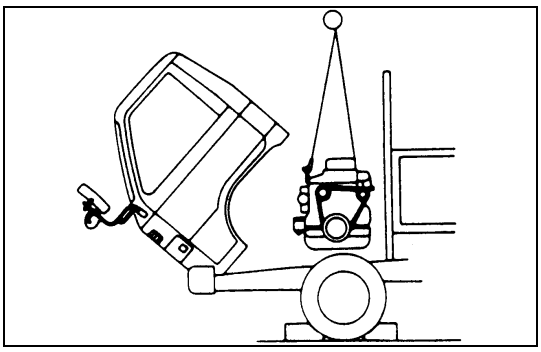
6A3-141-2.tif

2. Engine Assembly

1) Attach a lifting wire to the engine lifting hangers.
2) Operate the hoist to position the engine above the chassis frame.
3) Carefully lower the engine until it is just above the chassis frame.

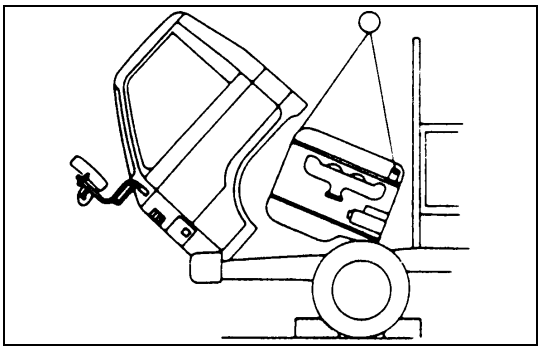
6A3-141-3.tif

4) Rotate the engine 90° to position it for final installation.
5) Carefully set the engine to the chassis.
   The front of the engine should be held higher than the rear at this time.
   Be careful not to damage the exposed parts.

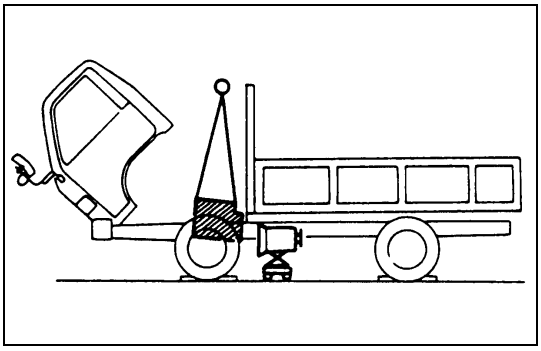
6A3-141-4.tif

6) Lower the engine until it contacts the engine mounting crossmember.
7) Set the engine mounting rubbers to the engine mounting crossmember.
8) Temporarily tighten the engine mounting rubber bolts.
   The bolts will be finally tightened after the transmission has been installed to the engine and the engine rear mounting bracket and the No.3 crossmember connected.

1. Engine Mount

Install the engine mount with it set to the holes of the engine mount crossmember. Then tighten it to the specified torque.

Mounting Rubber Nut Torque	N•m (kg•m/lb•ft)
	48 (4.9/35)

INSTALLATION

(Engine right side)

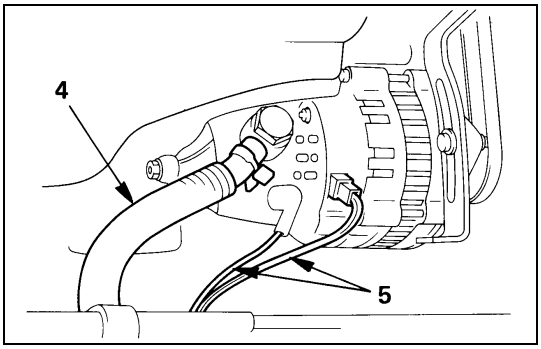

6A3-142-1.tif

5. ACG Harness

4. ACG Vacuum Hose

1) Connect the B terminal cable and the harness connector.
2) Connect the vacuum hoses to the vacuum pump.

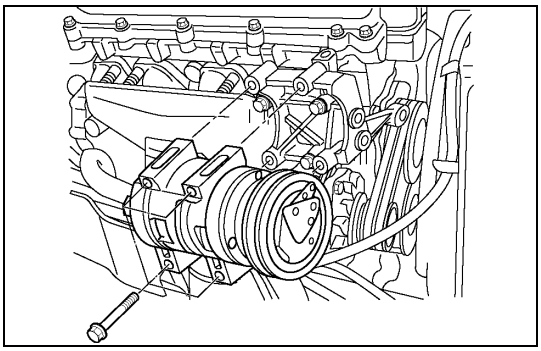
901LV058.tif

3. Air Conditioning (A/C) Compressor

- Tighten the fixing bolts to the specified torque.

A/C Compressor Bolt Torque	N•m (kg•m/lb•ft)
48 (4.9/35)	

NOTE:

When tightening the compressor fixing bolts, tighten the first 2 bolts on the rear side, and then the remaining 2 on the front.

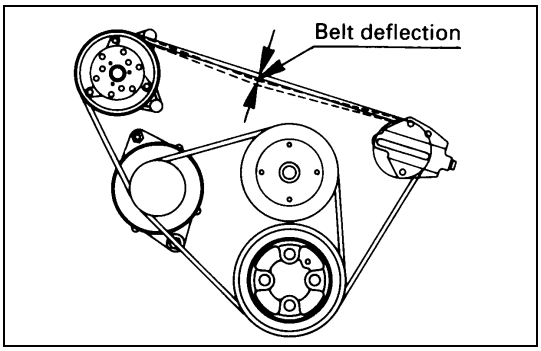

6A3-142-3.tif

- Install the drive belt adjust belt tension by adjusting bolt and tighten the locking nut to the specified torque.
- Depress the drive belt mid-portion with a 10 kg (22lb/98N) force.

Drive Bolt Deflection	mm(in)
16 - 20 (0.63 - 0.79) .. New belt 18 - 22 (0.71 - 0.87) .. Reuse belt	

Locking Nut Torque	N•m (kg•m/lb•ft)
27 (2.8/20)	

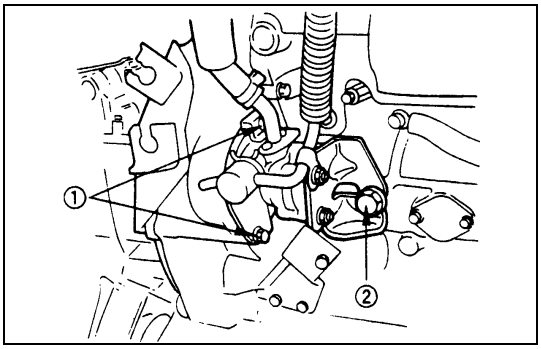

6A3-142-4.tif

2. Power Steering Pump

① Bolt Torque	N•m (kg•m/lb•ft)
43 (4.4/32)	

② Bolt Torque	N•m (kg•m/lb•ft)
44 (4.5/33)	

1. Front Exhaust Pipe

Exhaust Manifold Side	N•m (kg•m/lb•ft)
67 (6.8/49)	

Exhaust Brake Side	N•m (kg•m/lb•ft)
17 (1.7/12)	

Cylinder Body side	N•m (kg•m/lb•ft)
17 (1.7/12)	

INSTALLATION

(Engine front side)

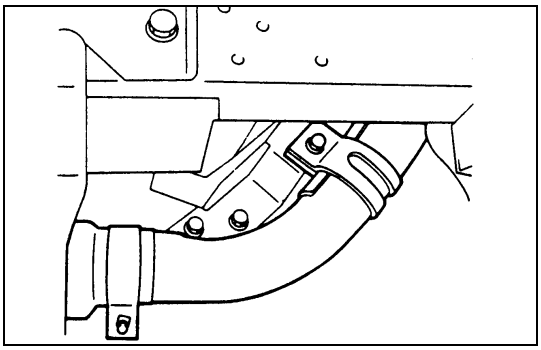

6A3-143-1.tif

6. Fan

Fan Bolt Torque	N•m (kg•m/lb•ft)
24 (2.4/17)	

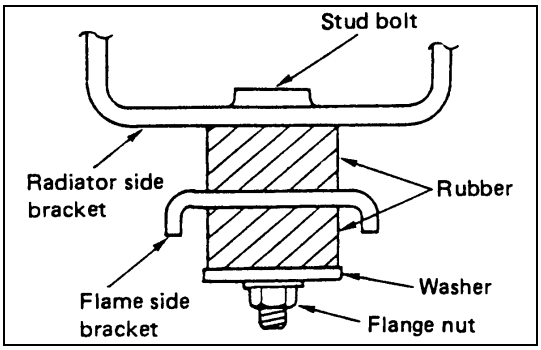

6A3-143-2.tif

5. Radiator

Radiator Bracket Bolt Torque	N•m (kg•m/lb•ft)
55 (5.6/41)	

4. Fan Guide
3. Radiator Lower Hose
2. Coolant Reserve Tank Hose/Bypass Hose
1. Radiator Upper Hose

INSTALLATION

(Engine left side)

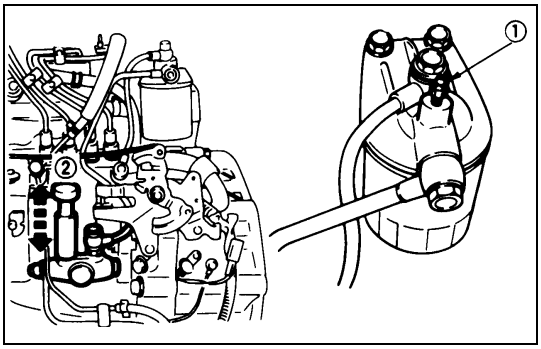

6A3-143-3.tif

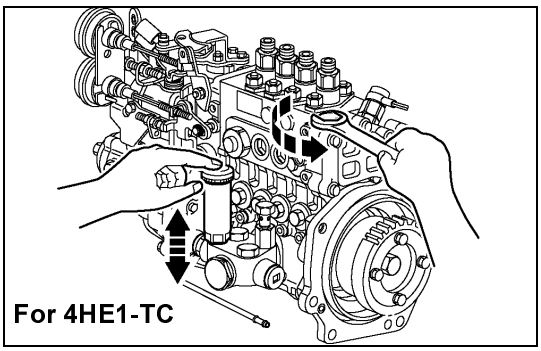

6A3-143-4.tif

7. Fuel Feed Hose
6. Fuel Return Hose

Air Bleeding

1) Loosen the priming pump cap ② at the side of the injection pump.
2) Loosen the bleeder valve ① (4HF1) at the top of the fuel filter.
3) Operate the priming pump to bleed the air from the injection pump.
4) Retighten the bleeder valve.
5) Operate the priming pump.
   Check for fuel leakage from around the injection pump and the fuel filter.
6) Lock the priming pump cap to the injection pump.

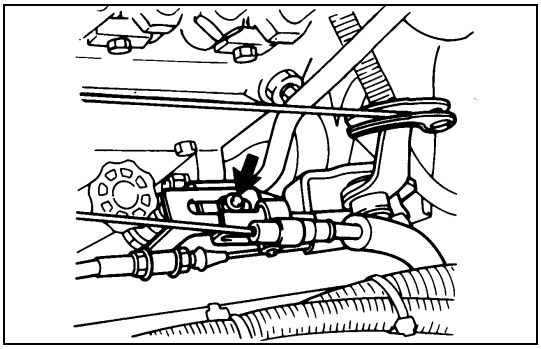

6A3-144-1.tif

5. Accelerator Control Cable

1) Check to see if the idling control knob is turned to the extreme left.
2) Attach the end tip of the cable to the engine control lever.
3) Pull the outer cable toward the front of the vehicle, and provide the engine control wire and the inner cable with an appropriate play before fastening the clamp with a nut.
4) Check to see if the control lever of the injection pump is at the idle position (with the lever in touch with the stopper bolt).

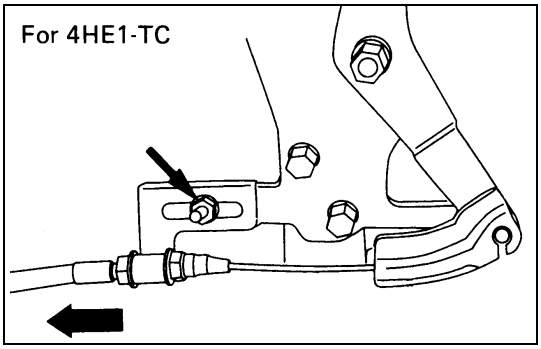

6A3-144-2.tif

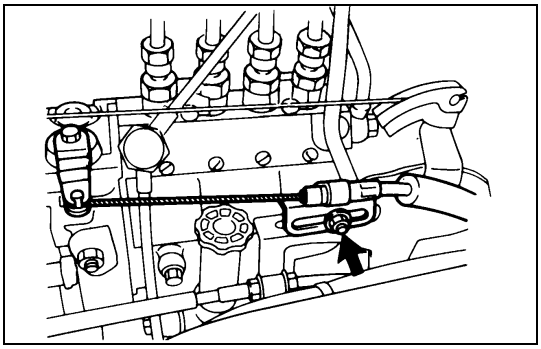

6A3-144-3.tif

4. Engine Stop Cable

1) Attach the end tip of the cable to the engine stopper lever.
2) Pull the cable toward the rear side of the vehicle, and fasten the clamp with a nut at the position where the lever stops.

3. Vacuum Hose

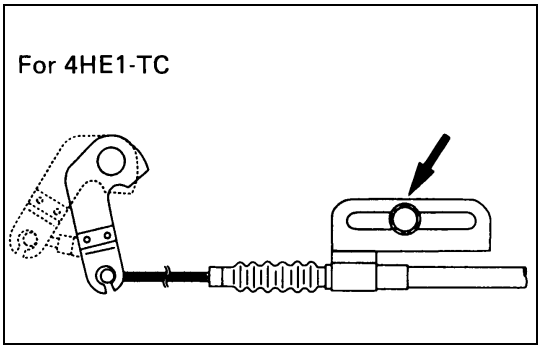

6A3-144-4.tif

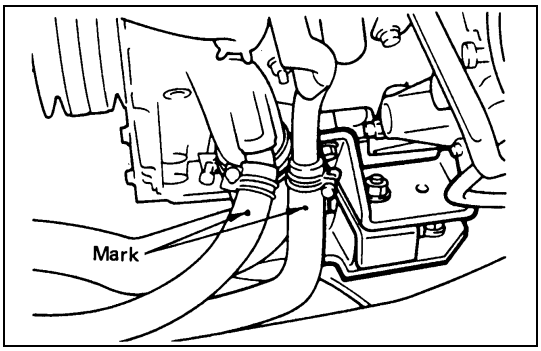

6A3-144-5.tif

2. Heater Hose

Install the hose with its mark turned up.

1. Intake Air Duct

INSTALLATION

(Automatic Transmission)

11. Transmission Assembly

Fasten the transmission to the transmission jack with a chain in the same manner as when dismounting it, and tighten the clutch housing clamping bolt to the specified torque.

(Refer to the illustration below)

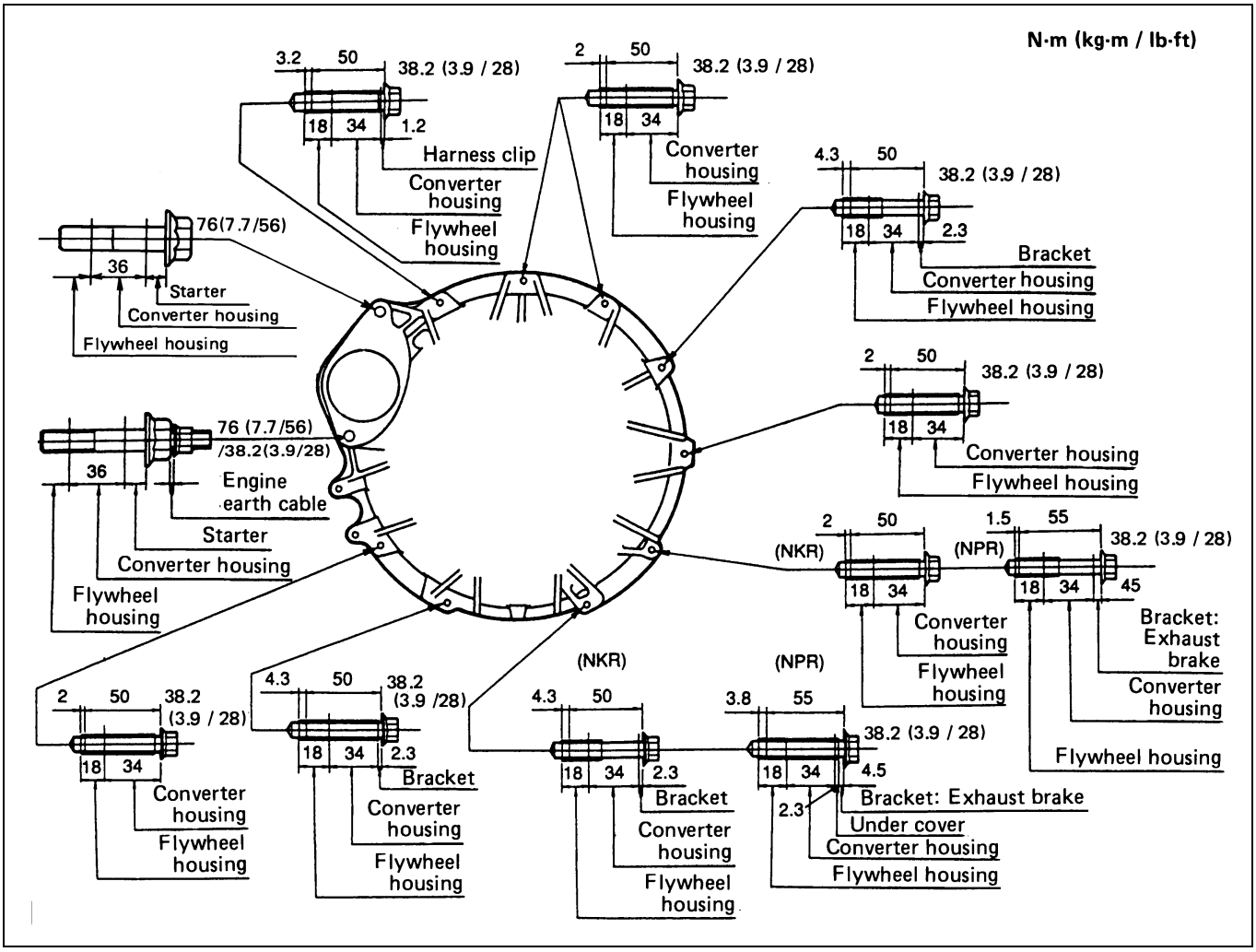

6A3-145-1.tif

10. Transmission Mounting Nut

Transmission Mounting Nut Torque	N•m (kg•m/lb•ft)
38 (3.9/28)	

9. Torque Cover for Bolt

	N•m (kg•m/lb•ft)
40 (4.1/30)	

8. Under Cover

Under Cover Bolt Torque	N•m (kg•m/lb•in)
9 (0.9/78)	

7. Starter

Refer to the preceding page.

6. ATF Cooler Pipe

N•m (kg•m/lb•ft)
44 (4.5/33)

5. Harness Connector

4. Oil Level Gauge

N•m (kg•m/lb•in)
9 (0.9/78)

3. Control Cable

2. Parking Brake Cable

1) With the lock nut (1) of the parking brake side cable tightened to the limit, rotate the nut (2) to connect it with the front side cable.
2) After tightening the front side nut (2) to the limit, fasten the parking brake cable with the lock nut (1).
3) Pull the parking brake lever to the limit (with the operating force of about 15kg at the hand), and adjust the lever with the lever adjusting nut so that the number of notches becomes 6 to 8 notches.

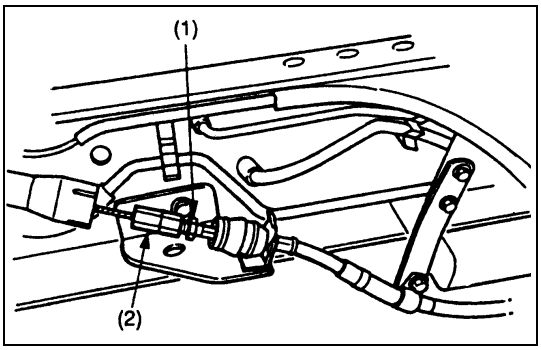

6A3-146-1.tif

1. Propeller Shaft Assembly

Propeller Shaft Bolt Torque	N•m (kg•m/lb•ft)
103 (10.5/76)	

INSTALLATION

(Manual Transmission)

13. Transmission Assembly

Fasten the transmission to the transmission jack with a chain in the same manner as when dismounting it, and tighten the clutch housing clamping bolt to the specified torque.

(Refer to the illustration below.)

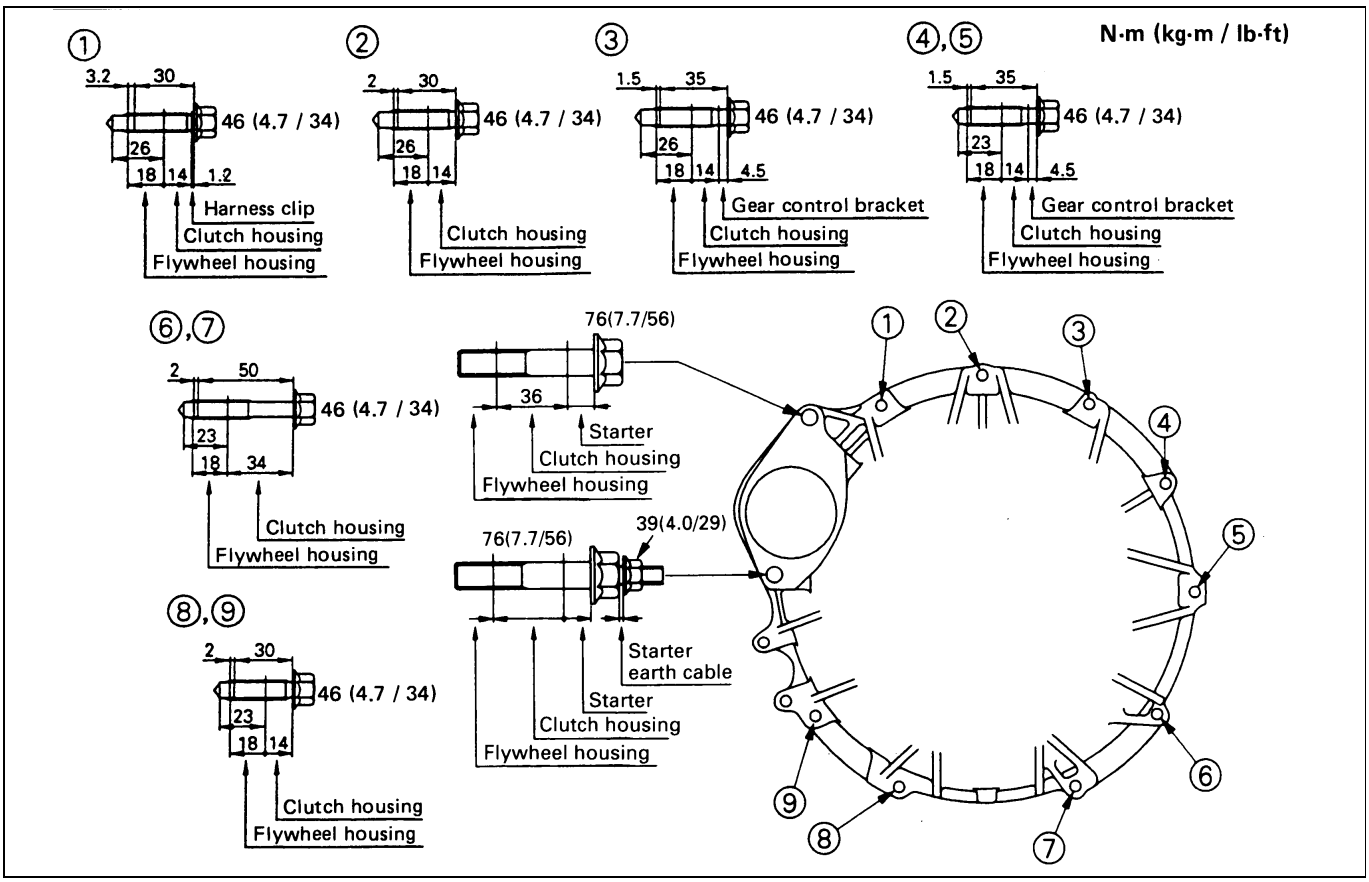

6A3-147-1.tif

12. Transmission Mounting Nut

Transmission Mounting Nut Torque	N•m (Kg•m/lb•ft)
40 (4.1/30)	

11. Starter

10. Starter Earth Cable

Refer to the preceding page.

9. Clutch Slave Cylinder

1) Install the clutch slave cylinder.

Slave Cylinder Bolts Torque	N•m (Kg•m/lb•ft)
16 (1.6/12)	

2) Install the clutch return spring to the clutch shift fork.

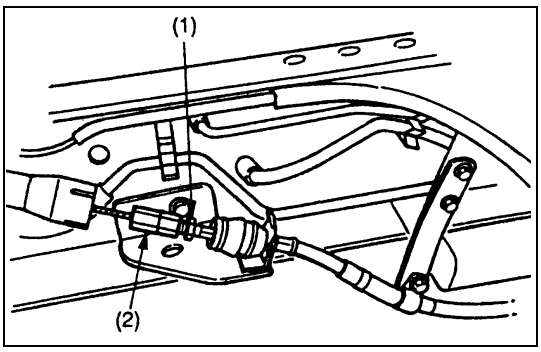

6A3-148-1.tif

8. **Select Cable**
7. **Shift Cable**
6. **Parking Brake Cable**
   1) With the lock nut (1) of the parking brake side cable tightened to the limit, rotate the nut (2) to connect it with the front side cable.
   2) After tightening the front side nut (2) to the limit, fasten the parking brake cable with the lock nut (1).
   3) Pull the parking brake lever to the limit (with the operating force of about 15 kg at the hand), adjust the lever with the lever adjusting nut so that the number of notches becomes 6 to 8 notches.
5. **Harness Connector**
4. **Back-up Lamp Connector**
3. **Neutral Switch Connector**
2. **Car Speed Sensor Connector**
1. **Propeller Shaft Assembly**

Propeller Shaft Bolt Torque	N•m (kg•m/lb•ft)
103 (10.5/76)	

Engine Warm-Up

After completing the required maintenance procedures, start the engine and allow it to warm up. Then check the following:

1) Engine idling speed
   Refer to "Servicing" for the idling speed adjustment procedure.
2) Engine noise level
3) Engine oil, coolant and fuel leakage
4) Engine control cable operation
5) Clutch engagement
6) Indicator warning light operation

SECTION 6B

ENGINE COOLING

CONTENTS

	PAGE
General Description	6B - 1
On Vehicle Service	6B - 5
Water Pump	6B - 5
Thermostat	6B - 8
Radiator	6B - 10
Drive Belt Adjustment	6B - 13

GENERAL DESCRIPTION

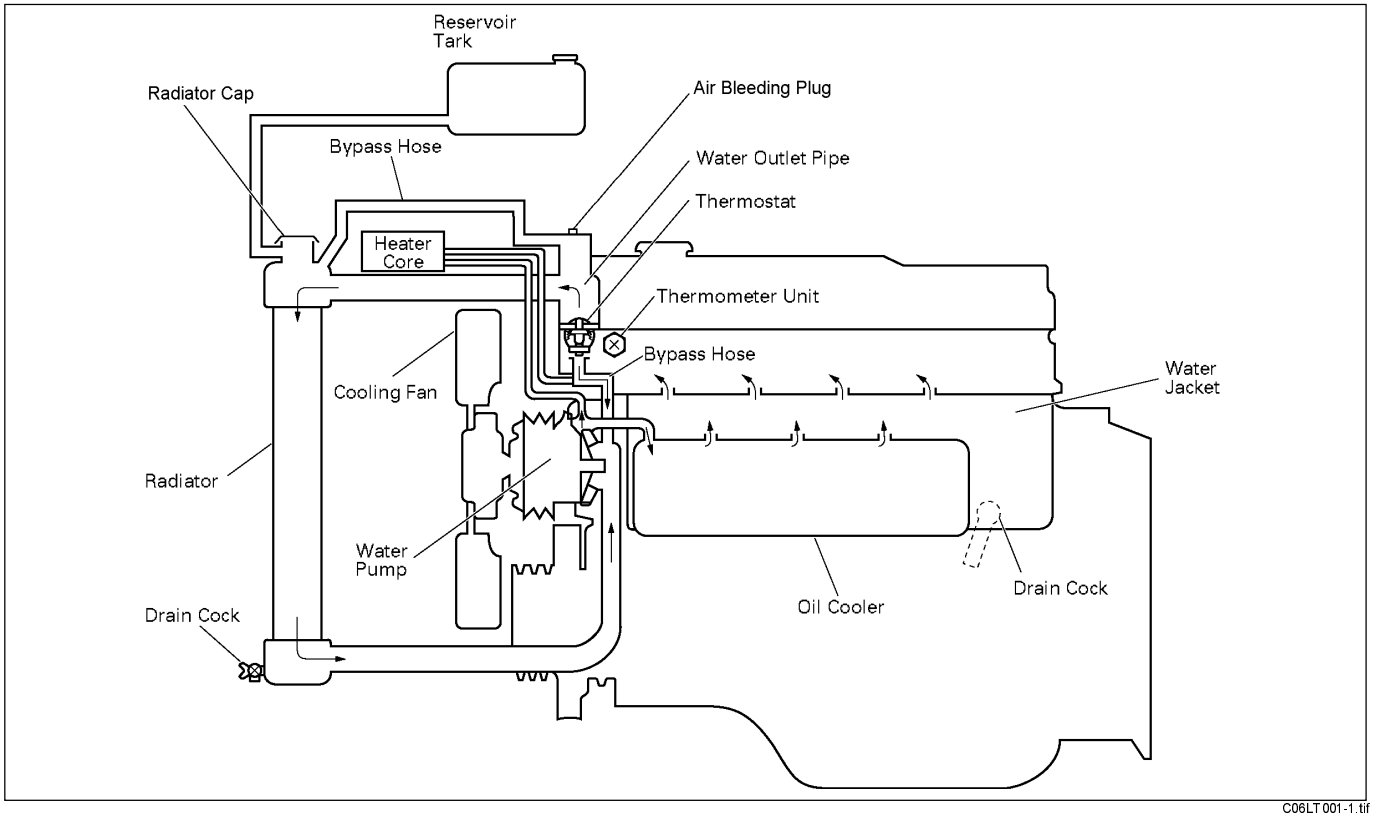

C06LT001-1.tif

The engine cooling system consists of the radiator, the water pump, the cooling fan, and the thermostats.

To quickly increase cold engine coolant temperature for smooth engine operation, the coolant is circulated by the water pump and thermostats through the by-pass hose and back to the cylinder body. The coolant does not circulate through the radiator.

When the coolant temperature reaches 82°C (180°F), the thermostat will begin to open and a gradually increasing amount of coolant will circulate through the radiator.

The thermostats will be fully open when the coolant temperature reaches 100°C (212°F). All of the coolant is now circulating through the radiator for effective engine cooling.

Engine coolant change procedure.

1. To change engine coolant, make sure that the engine is cool.

   WARNING:

   When the coolant is heated to a high temperature, be sure not to loosen or remove the radiator cap. Otherwise you might get scalded by hot vapor or boiling water. To open the radiator cap, put a piece of thick cloth on the cap and loosen the cap slowly to reduce the pressure when the coolant has become cooler.

2. Open radiator cap and drain the cooling system by loosening the drain valve on the radiator and on the cylinder body.

   NOTE:

   For best result it is suggested that the engine cooling system be flushed at least once a year. It is advisable to flash the interior of the cooling system including the radiator before using anti-freeze (ethylene-glycol based).

   Replace damaged rubber hoses as the engine anti-freeze coolant is liable to leak out even minor cracks.

   Isuzu recommends to use Isuzu genuine anti-freeze (ethylene-glycol based) or equivalent, for the cooling system and not add any inhibitors or additives.

   CAUTION:

   A failure to correctly fill the engine cooling system in changing or topping up coolant may sometimes cause the coolant to overflow from the filler neck even before the engine and radiator are completely full.

   If the engine runs under this condition, shortage of coolant may possibly result in engine overheating. To avoid such trouble, the following precautions should be taken in filling the system.

3. To refill engine coolant, pour coolant up to filler neck using a filling hose which is smaller in outside diameter of the filler neck. Otherwise air between the filler neck and the filling hose will block entry, preventing the system from completely filling up.
4. Keep a filling rate of 9 liter/min or less. Filling over this maximum rate may force air inside the engine and radiator.

   And also, the coolant overflow will increase, making it difficult to determine, whether or not the system is completely full.

5. After filling the system to the full, pull out the filling hose and check to see if air trapped in the system is dislodged and the coolant level goes down. Should the coolant level go down, repeat topping-up until there is no more drop in the coolant level.
6. After directly filling the radiator, fill the reservoir to the maximum level.
7. Install and tighten radiator cap and start the engine. After idling for 2 to 3 minutes, stop the engine and reopen radiator cap. If the water level is lower, replenish.

   WARNING:

   When the coolant is heated to a high temperature, be sure not to loosen or remove the radiator cap. Otherwise you might get scalded by hot vapor or boiling water. To open the radiator cap, put a piece of thick cloth on the cap and loosen the cap slowly to reduce the pressure when the coolant has become cooler.

8. After tightening radiator cap, warm up the engine at about 2,000 rpm.

   Set heater adjustment to the highest temperature position, and let the coolant circulate also into heater water system.

9. Check to see the thermostat has opened through the needle position of water thermometer, conduct a 5-minute idling again and stop the engine.
10. When the engine has been cooled, check filler neck for water level and replenish if required. Should extreme shortage of coolant is found, check the coolant system and reservoir tank hose for leakage.
11. Fill the coolant into the reservoir tank up to “MAX” line.

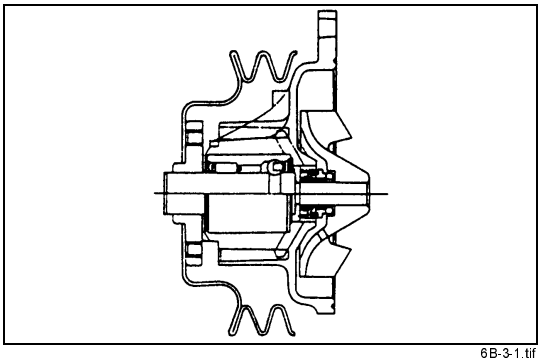

6B-3-1.tif

WATER PUMP

The coolant pump is a centrifugal impeller type and is driven by V type drive belt.

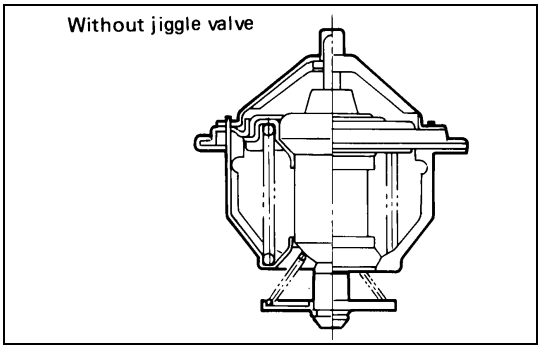

6B-3-2.tif

THERMOSTAT

The thermostat is a wax pellet type with a jiggle valve and is installed in the outlet pipe.

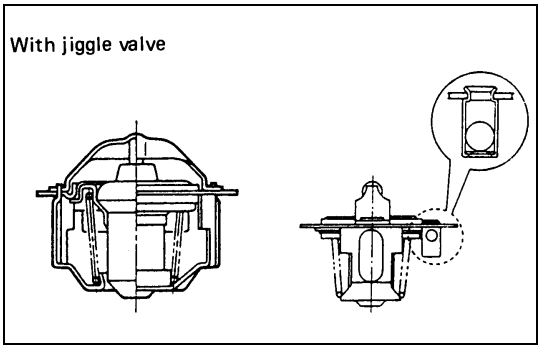

6B-3-3.tif

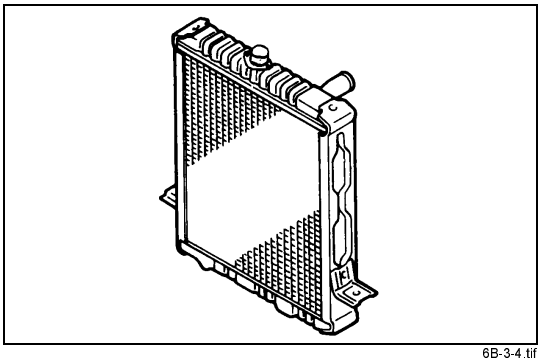

6B-3-4.tif

RADIATOR

The radiator is a tube type with corrugated fins. In order to raise the boiling point of coolant, the radiator is adjusted through a valve fitted to the upper tank to a pressure range of 93 - 123 kPa (0.95 - 1.25 kg/cm^2). The cap fitted to the cylinder head thermostat housing has only a water supply function.

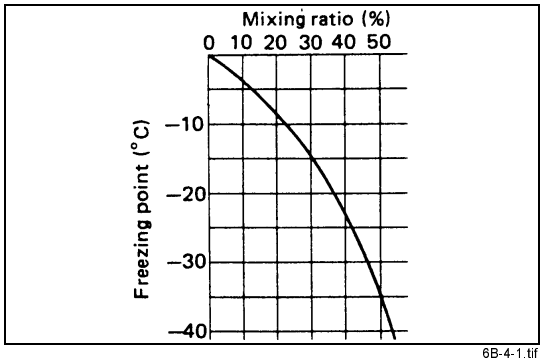

6B-4-1.tif

ANTI-FREEZE SOLUTION

- Relation between Mixing ratio and Freezing point
  Freezing temperature of the engine coolant varies with the ratio of anti-freeze solution in water.
  Proper mixing ratio can be determined by referring to the chart. Supplemental inhibitors or additives claiming to increase cooling capability that have not been specifically approved by Isuzu are not recommended for addition to the cooling system.
- Calculation of mixing ratio
  Mixing ratio

$$= \frac{\text{Anti-freeze solution (Lit/qt.)}}{\text{Anti-freeze solution (Lit/qt.) + water (Lit/qt.)}}$$

Note:

Anti-freeze solution + Water = 12 lit

Total cooling system capacity.

In case of 6.8 lit total cooling system capacity

Mixing ratio(%)	Anti-freeze solution: lit.(imp.qt./U.S.qt)		Water: lit. (imp.qt/U.S. qt)	
0	0	0	6.8	(5.98/7.19)
5	0.3	(0.26/0.32)	6.5	(5.71/6.87)
10	0.7	(0.62/0.74)	6.0	(5.28/6.34)
15	1.0	(0.88/0.93)	5.8	(5.1/6.13)
20	1.4	(1.23/1.48)	5.4	(4.75/5.7)
25	1.7	(1.50/1.80)	5.1	(4.49/5.39)
30	2.0	(1.76/1.86)	4.8	(4.22/5.04)
35	2.4	(2.11/2.23)	4.4	(3.87/4.65)
40	2.7	(2.38/2.85)	4.1	(3.6/4.33)
45	3.1	(2.72/2.87)	3.7	(3.26/3.91)
50	3.4	(2.99/3.60)	3.4	(2.99/3.60)

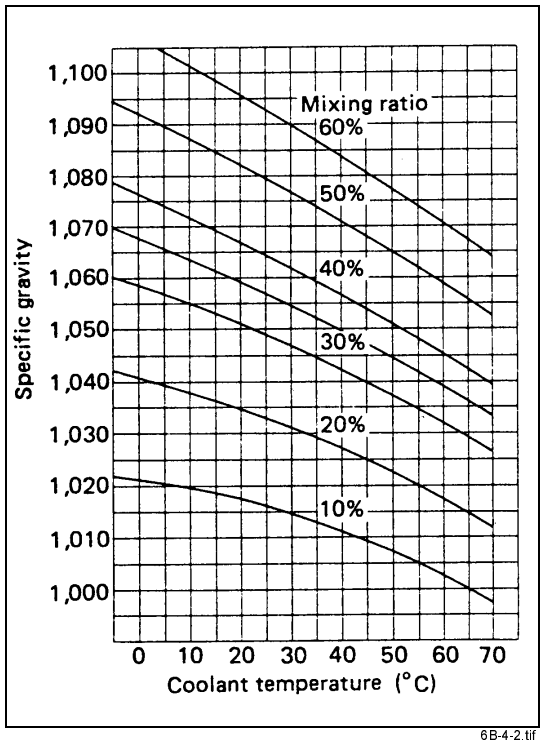

6B-4-2.tif

- Mixing ratio
  Check the specific gravity of engine coolant in the cooling system in temperature ranges from 0°C to 50°C using a suction type hydrometer, then determine the mixing ratio of the coolant by refering to the table at left.

ON-VEHICLE SERVICE

WATER PUMP

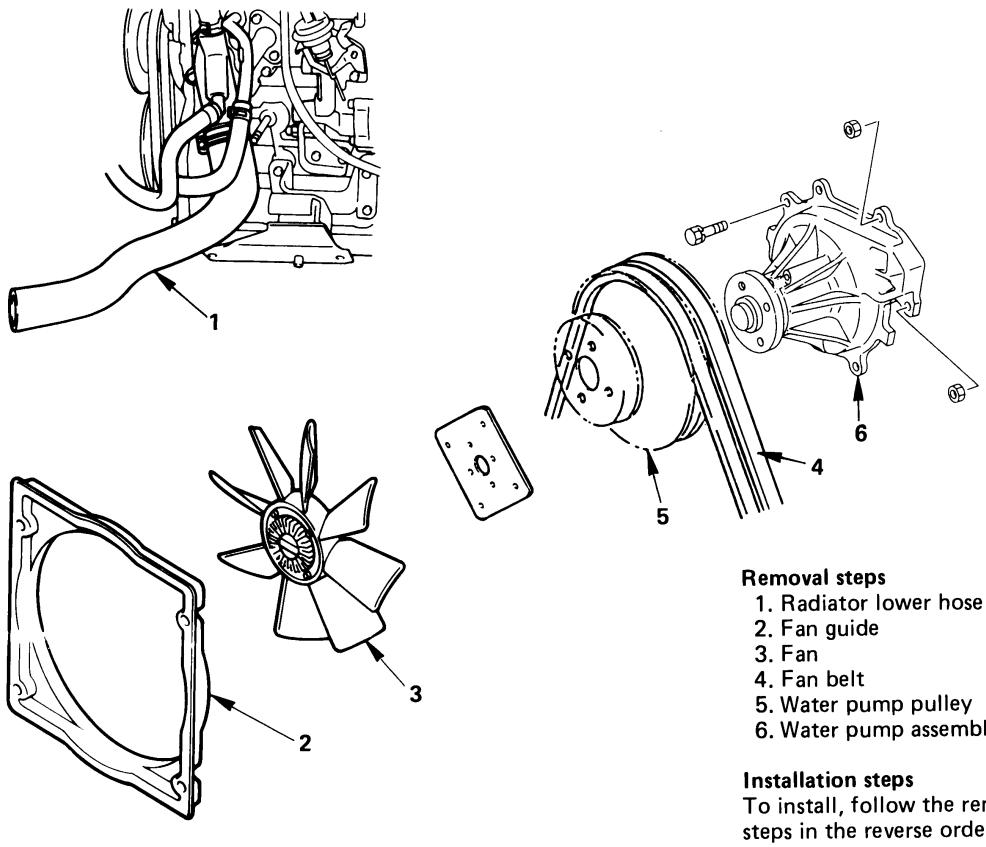

Removal steps
1. Radiator lower hose
2. Fan guide
3. Fan
4. Fan belt
5. Water pump pulley
6. Water pump assembly

Installation steps
To install, follow the removal steps in the reverse order.

6B-5-1.tif

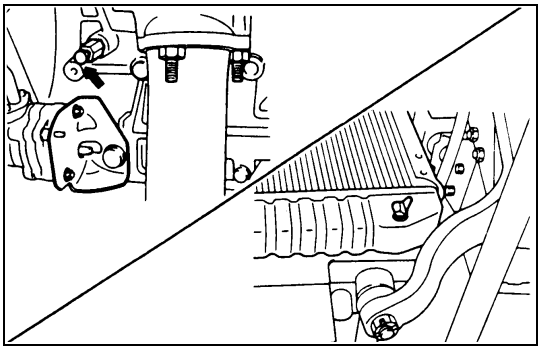

6B-5-2.tif

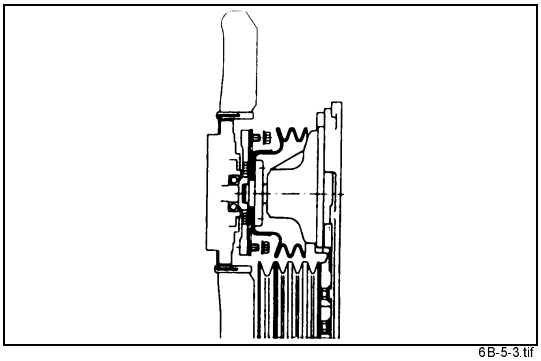

6B-5-3.tif

REMOVAL

Preparation

- Disconnect battery ground cable.
- Drain coolant.
- Tilt the cab.

1. **Radiator Lower Hose**
   Disconnect radiator Lower hose from radiator.
2. **Fan Guide**
3. **Fan**
4. **Fan Belt**
5. **Water Pump Pulley**
6. **Water Pump Assembly**

INSPECTION

Make the necessary adjustments, repairs, and part replacements if excessive wear or damage is discovered during inspection.

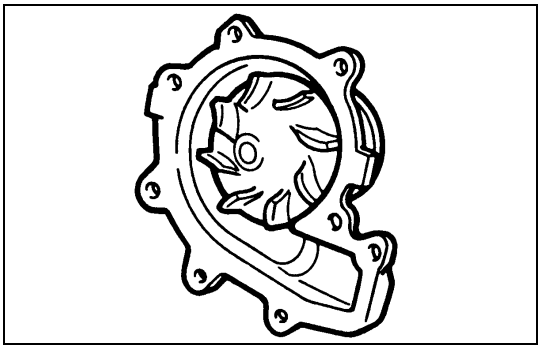

6B-6-1.tif

Water Pump Assembly

1) Check the pump body for crack and damage.
2) Check the impeller for crack and corrosion.
3) Check the seal unit leakage.
4) If there is any abnormal condition, replace the water pump as an assembly.

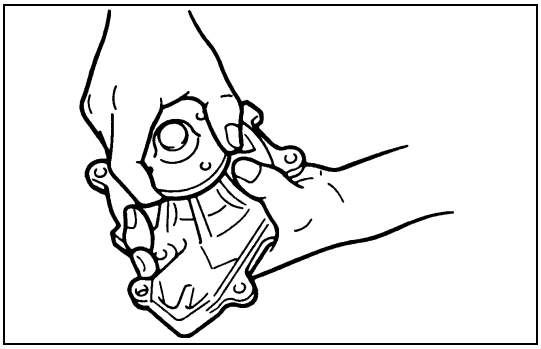

6B-6-2.tif

Bearing Unit

1) Rotate the fan center while pushing it toward the radius, and check to see if there is any excessive play or noise.
2) When there is any excessive play or noise found, replace it as a water pump assembly.

INSTALLATION

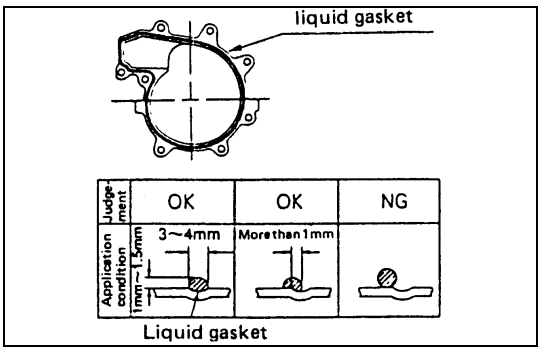

6B-6-3.tif

6. Water Pump Assembly

1) Apply 3mm-4mm bead of the recommended liquid gasket (Three Bond 1207C) or its equivalent on the water pump fitting surface.
2) Install the water pump to the front retainer.

Water Pump Bolt Torque	N·m (kg·m/lb·ft)
24 (2.4/17)	

- Install the water pump within 7 minutes after application of liquid gasket.
- For the dislocation of liquid gasket, refer to the illustration.

CAUTION:

The water pump clamping bolt is also used to tighten the front retainer. So, install the water pump before liquid gasket gets dry immediately after installation of the front retainer.

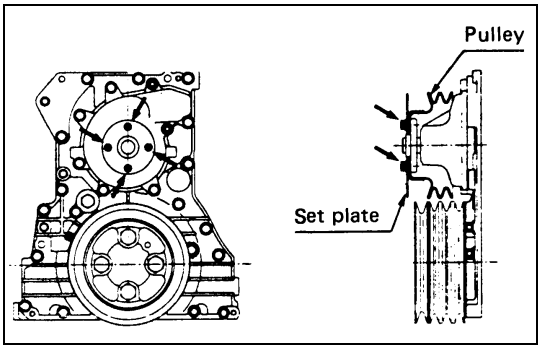

6B-7-1.tif

5. Water Pump Pulley

Water Pump Pulley Bolt Torque	N·m (kg·m/lb·ft)
24 (2.4/17)	

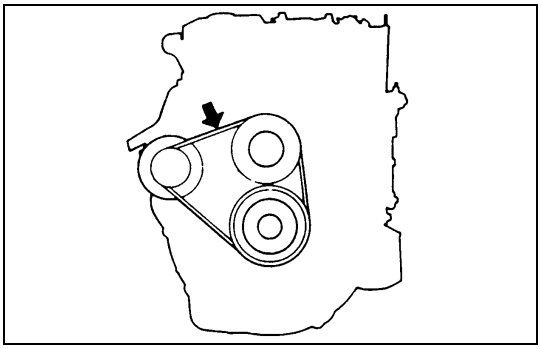

6B-7-2.tif

4. Fan Belt

Check the drive belt tension.

Depress the drive belt mid-portion with a 10kg (22lb/98N) force.

Drive Belt Deflection	mm (in)
8 - 12 (0.31 - 0.47)	… New belt
10 - 14 (0.39 - 0.55)	… Reuse belt

Check the drive belt for cranking and other damage.

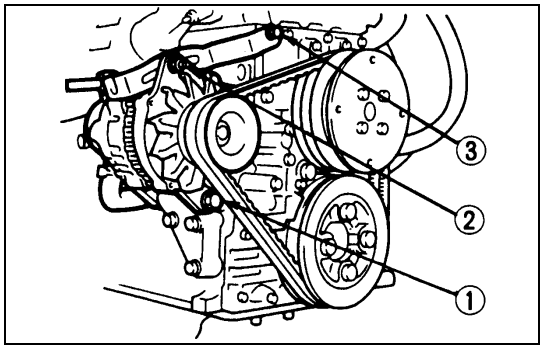

6B-7-3.tif

Fan Belt Adjustment

Fan belt tension is adjusted by moving the generator.

Torque	N·m (kg·m/lb·ft)
①	40 (4.1/30)
②	24 (2.4/17)
③	46 (4.7/34)

3. Fan

Fan Bolt Torque	N·m (kg·m/lb·ft)
24 (2.4/17)	

2. Fan Guide

1. Radiator Lower Hose

- Pour coolant into radiator.
- Connect battery ground cable.
- Start engine and check for water leakage carefully.

THERMOSTAT

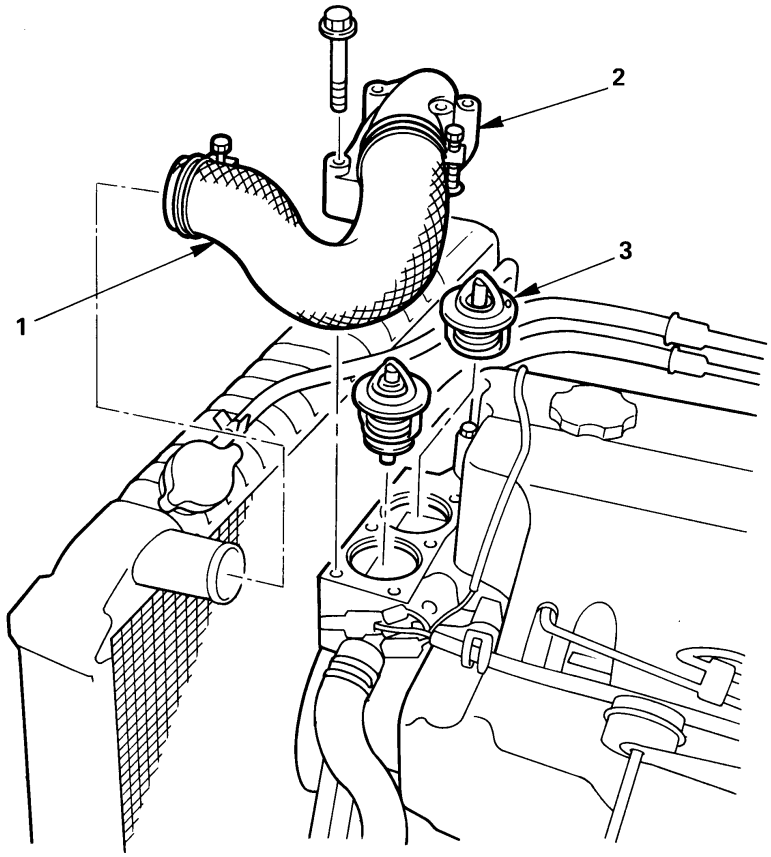

Removal steps
1. Radiator upper hose
2. Water outlet pipe
3. Thermostat

Installation steps
To install, follow the removal steps in the reverse order.

6B-8-1.tif

REMOVAL

Preparation

- Disconnect battery ground cable
- Drain coolant

1. **Radiator Upper Hose**
   Disconnect radiator upper hose from radiator.
2. **Water Outlet Pipe**
   Remove mounting bolt and remove outlet pipe together with radiator upper hose.
3. **Thermostat**

INSPECTION

Make the necessary adjustments, repairs, and part replacements if excessive wear or damage is discovered during inspection.

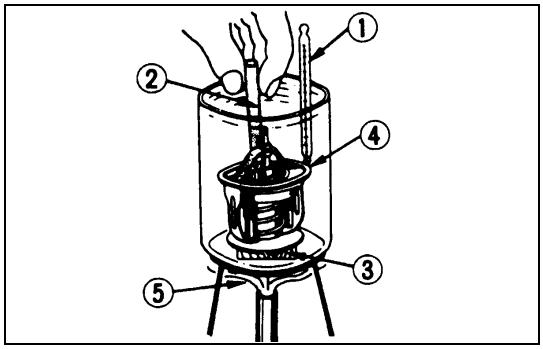

6B-9-1.tif

Operating Test

1) Completely submerge the thermostat in water.
2) Heat the water.
   Stir the water constantly to avoid direct heat being applied to the thermostat.
3) Check the valve initial opening temperature.

Valve Initial Opening Temperature °C (°F)

		Standard
without jiggle valve	Primary valve	80-84(176-183)
	Secondary valve	83-87(181-189)
with jiggle valve		83.5-86.5(182-188)

4) Check the valve lift full opening temperature.

Valve Lift Full Opening Temperature °C (°F)

	Standard
without jiggle valve	95 (203)
with jiggle valve	100 (212)

① Thermometer
② Agitating rod
③ Wooden piece
④ Thermostat
⑤ Heat

INSTALLATION

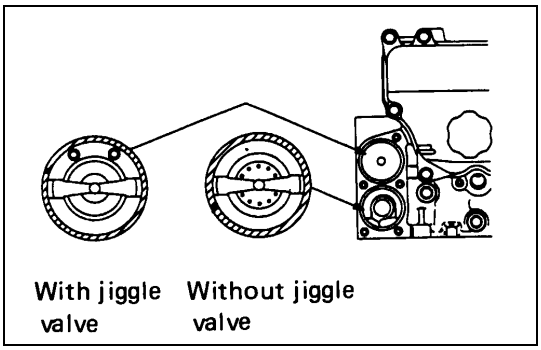

6B-9-2.tif

3. Thermostat

Install the gaskets to the thermostats and the thermostats to the cylinder head as shown in the illustration.

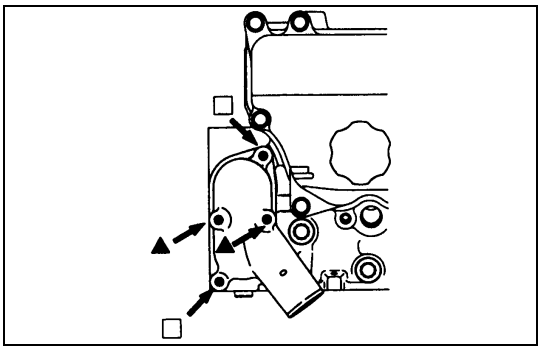
6B-9-3.tif

2. Water Outlet Pipe

Install the water outlet pipe with thermostat to the cylinder head.

Tighten the water outlet pipe bolts to the specified torque.

Water Outlet Pipe Bolt Torque N·m (kg·m/lb·ft)

24(2.4/17)

1. Radiator Upper

- Connect battery ground cable.
- Pour coolant
- Start the engine and check coolant leakage.

RADIATOR

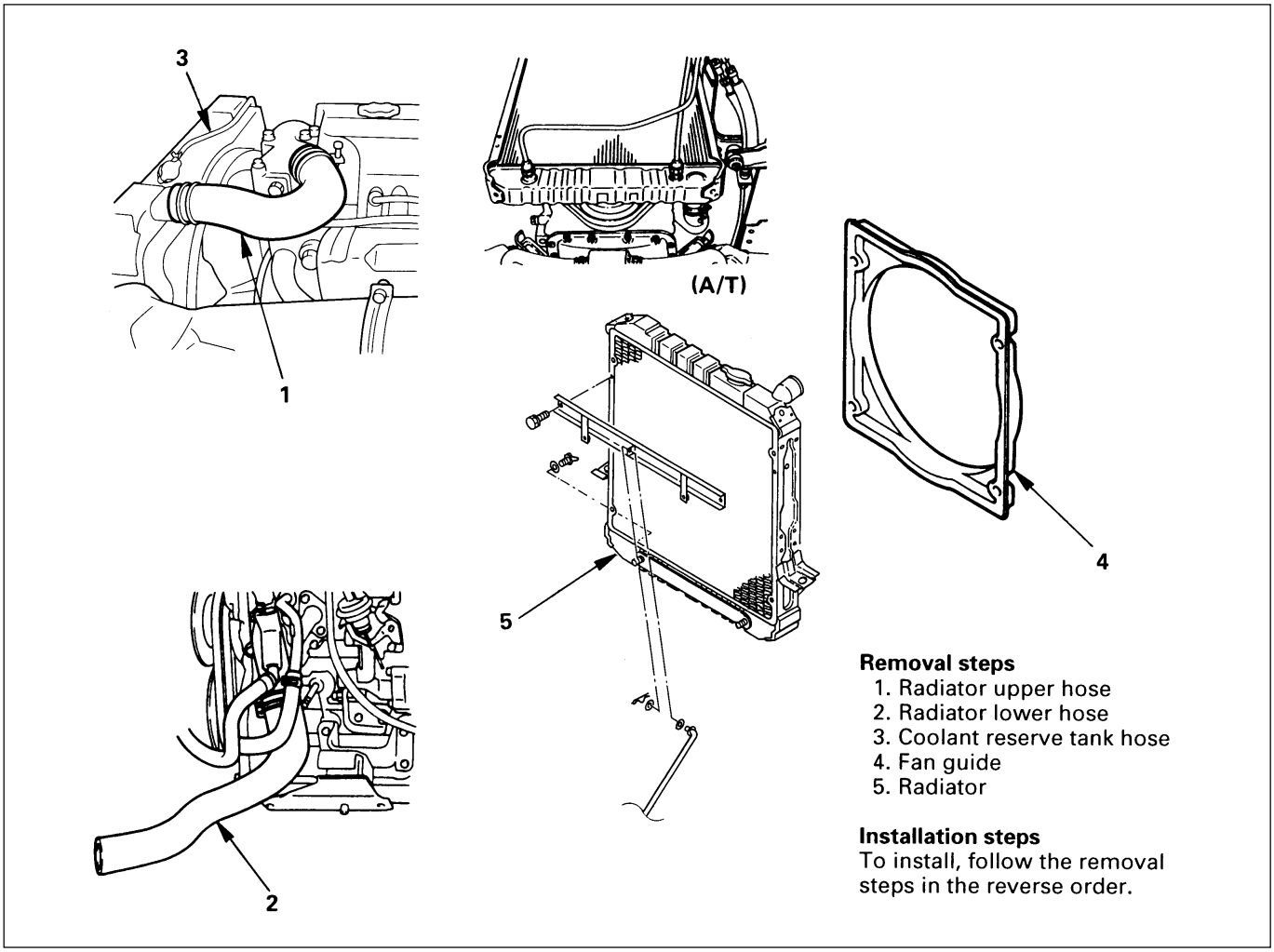

6B-10-1.tif

REMOVAL

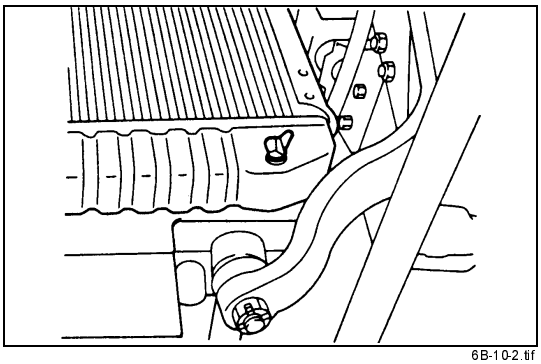

6B-10-2.tif

- Disconnect battery ground cable.
- Tilt the cab.
- Loosen drain plug to drain coolant.

1. **Radiator Upper Hose**
2. **Radiator Lower Hose**

   Disconnect upper hose and lower hose from the radiator.
3. **Coolant Reserve Tank Hose**

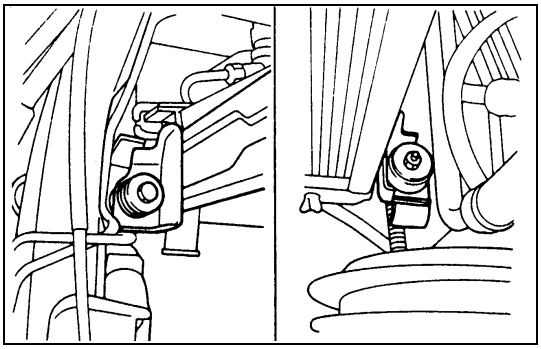
6B-11-1.tif

4. **Fan Guide**
5. **Radiator**
   1) Remove upward the radiator assembly with hose, taking care not to damage the radiator core by fan blade.
   2) For the A/T model vehicle, remove the oil cooler pipe.

INSPECTION

Radiator Valve Check

1) Apply air pressure from filler neck using radiator cap tester and check the opening pressure of radiator valve. If the valve opening pressure is out of the standard value range, replace with a new radiator valve.

Radiator Valve Opening Pressure	kPa^2 (kg/cm^2/psi)
93 - 123 (0.95 - 1.25/13.5 - 17.8)	

2) Remove the radiator valve and check a negative pressure valve as the center of the valve seat side. If the negative pressure valve does not work smoothly, clean or replace the radiator valve.

Radiator Valve Fixing Torque	N·m (kg·m/lb ft)
6 (0.6/4)	

3) Conduct cooling system leakage check after reinstalling the radiator valve.

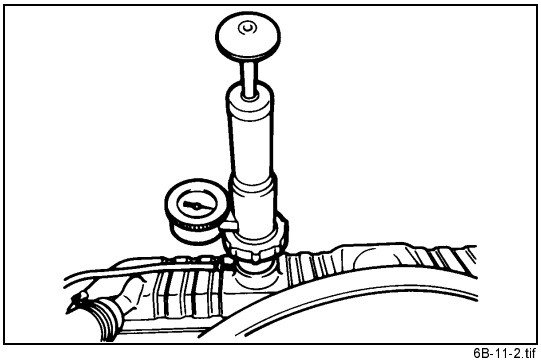
6B-11-2.tif

Cooling System Leakage Check

1) Clog up the reserver tank hose carefully and check the cooling system for leakage with a radiator cap tester by applying an air pressure of 196 kPa (2 kg/cm^2/28 psi) from filler neck to inside the radiator.
2) As the radiator upper tank is provided with a valve, the pressure fails to rise higher than the valve opening pressure unless the hose is clogged up.

Radiator Core

1) Deformed radiator fins could reduce radiation effects, resulting in overheat. Straighten the fins. In such a case, take care not to damage the fin roots.
2) Remove dust and other foreign materials.

Flushing the Radiator

Wash the inside of radiator and the coolant passage with water and neutral detergent. Remove all scales and rust.

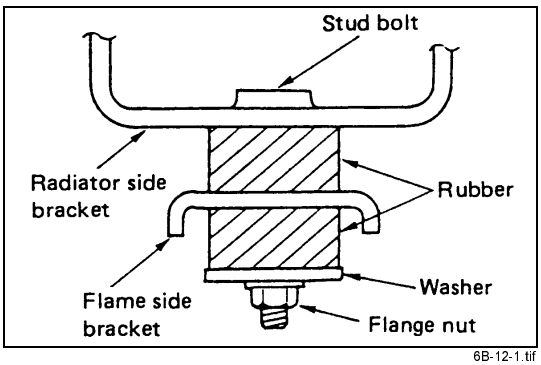

6B-12-1.tif

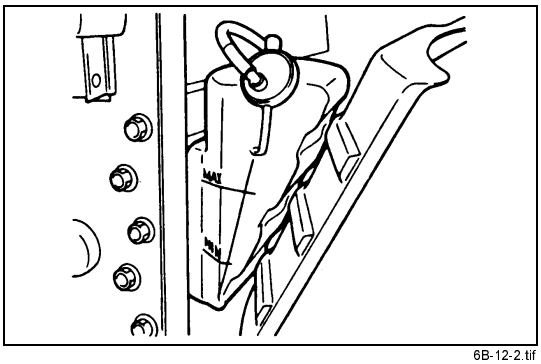

6B-12-2.tif

INSTALLATION

5. **Radiator**

   With due attention paid not to damage the radiator core by the fan blades, install the both brackets of the radiator to the brackets on the frame as shown in the illustration.

4. **Fan Guide**
3. **Coolant Reserve Tank Hose**
2. **Radiator Lower Hose**
1. **Radiator Upper Hose**
   - Connect battery ground cable.
   - Pour coolant
   - Pour coolant up to filler neck of outlet pipe, and up to MAX mark of reserve tank.
   - Start engine to warm up, and check for coolant level. Replenish coolant if it does not reach the outlet pipe filler neck, and tighten the cap completely.

DRIVE BELT ADJUSTMENT

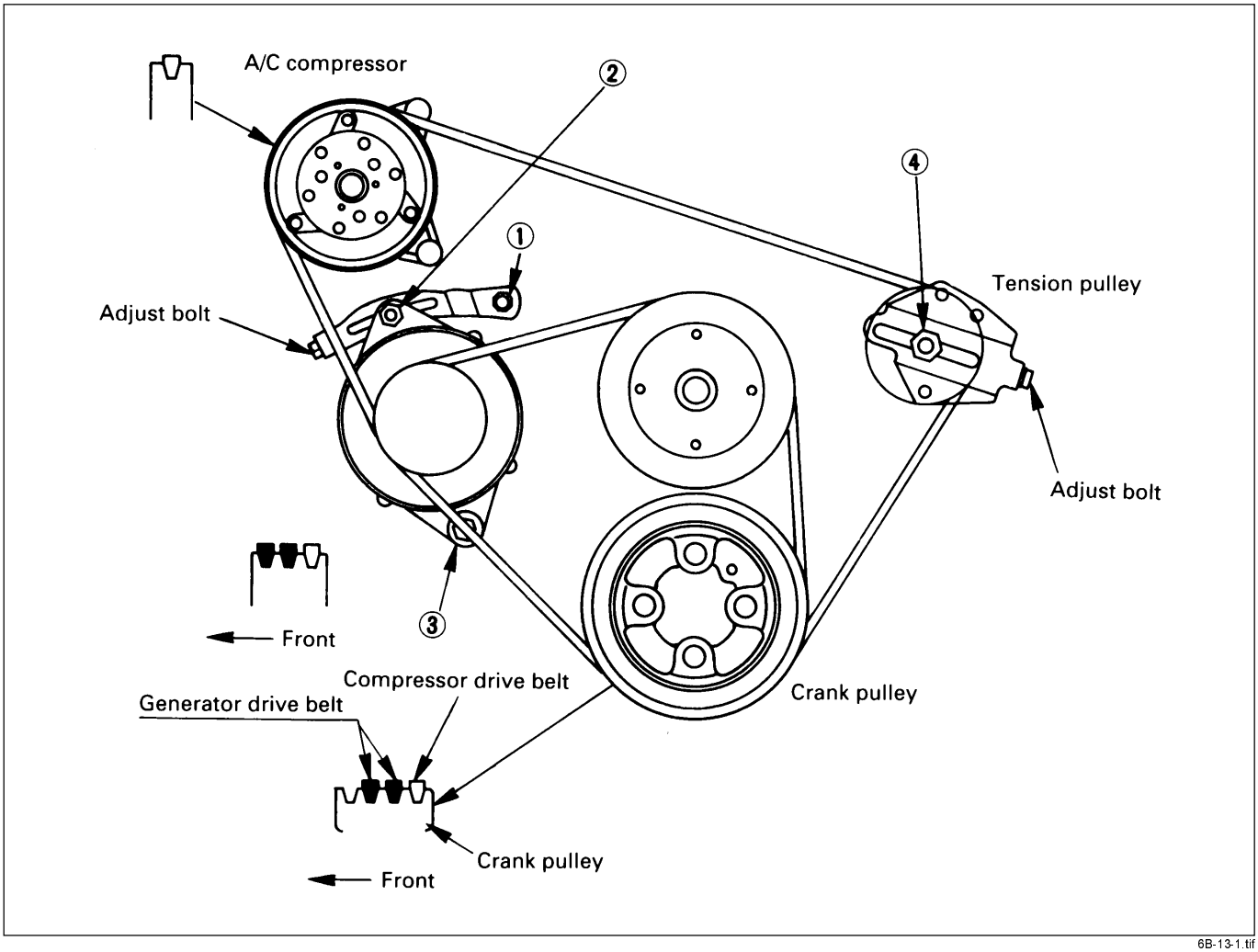

6B-13-1.tif

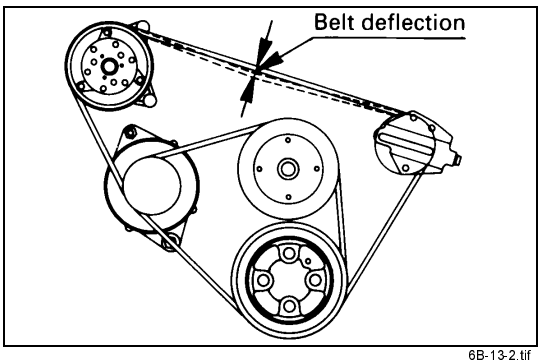

6B-13-2.tif

INSPECTION

Check drive belts for wear or damage, and replace with new ones as necessary. Check belts for tension, and adjust as necessary.

1) Check drive belts tension
2) Push the middle of belts with a force of 98N (10kg/22 lb) and check each belt for deflection.
3) Standard deflection

Fan Drive Belt Deflection	mm (in)
8 - 12 (0.31 - 0.47)	… New belt
10 - 14 (0.39 - 0.55)	… Reuse belt

A/C Drive Belt Deflection	mm (in)
16 - 20 (0.63 - 0.79)	… New belt
18 - 22 (0.71 - 0.87)	… Reuse belt

TENSION ADJUSTMENT

(Refer to the illustration on the previous page.)

1. Generator & Water Pump Pulley Drive Belt

1) Loosen the Air Conditioining (A/C) drive belt tension pulley adjust bolt and lock nut ④. Then free the A/C drive belt.
2) Loosen the adjust plate lock nut ② , the fixing bolt ① , and the fixing bolts ③ on the lower side of the generator.
3) Rotate the adjust bolt to adjust the belt.
4) After adjustment, tighten each section to the specified torque.

Torque	N·m (kg·m/lb·ft)
①	46 (4.7/34)
②	24 (2.4/17)
③	40 (4.1/30)

5) Adjust the A/C drive belt tension.

2. A/C Compressor Drive Belt

1) Loosen the tension pulley lock nut ④, and rotate the adjust bolt to adjust the belt.
   When finishing the fan drive belt adjustment, then adjust the A/C drive belt.
2) After adjustment, tighten the lock nut ④ to the specified torque.

Lock Nut ④ Torque	N·m (kg·m/lb·ft)
27 (2.8/20)	

SECTION 6C
FUEL SYSTEM

CONTENTS

PAGE

General Description ..... 6C - 2
On-Vehicle Service ..... 6C - 8
Fuel Filter Assembly (Except 4HF1-2 model) ..... 6C - 8
Fuel Filter Assembly (4HF1-2 model only) ..... 6C - 12
Injection Nozzle Assembly ..... 6C - 14
Injection Pump Assembly (Except 4HF1-2 model) ..... 6C - 33
Injection Pump Assembly (4HF1-2 model only) ..... 6C - 39
Injection Timing Adjustment ..... 6C - 44
Injection Pump Data ..... 6C - 48
Aneroid Compensator Adjustment ..... 6C - 75
Fuel Tank ..... 6C - 76
Fuel Gauge Unit ..... 6C - 78
Accelerator Control ..... 6C - 79
Accelerator Control Cable ..... 6C - 79
Accelerator Pedal ..... 6C - 81
Idling Control Cable ..... 6C - 82
Air Cleaner Element ..... 6C - 84

GENERAL DESCRIPTION

When working on the fuel system, there are several things to keep in mind:

- Any time the fuel system is being worked on, disconnect the negative battery cable except for those tests where battery voltage is required.
- Always keep a dry chemical (Class B) fire extinguisher near the work area.
- Replace all pipes with the same pipe and fittings that were removed.

  Clean and inspect “O” rings. Replace where required.
- Always relieve the line pressure before servicing any fuel system components.
- Do not attempt repairs on the fuel system until you have read the instructions and checked the pictures relating to that repair.

DESCRIPTION

Fuel Filters

The Purpose of the fuel filters is to clean the fuel of any dirt particles that can cause wear on the fuel injection nozzle’s sliding surface; and to separate any water from the fuel, which is ever-present from the condensation in the fuel tank. The pre-fuel filter (water separator) is located between the fuel tank and the injection pump. The secondary fuel filter is located between the fuel pump and the injection pump.

Pre-Fuel Filter

When the condensed water in the pre-fuel filter (water separator) comes to the warning level indicated on its plastic body, drain the fluid immediately from the drain plug located bottom of water separator.

Injection Pump

The fuel injection system includes a fuel tank, fuel hoses and lines, a fuel/water separator, fuel filters, a fuel pump, a Bosch-type in-line fuel injection pump with an internal governor, delivery valves, fuel injection lines and for fuel injection nozzles.

The fuel pump, injection pump and the nozzle are manufactured by ZEXEL corporation, but serviced by Bosch.

Remove the injection pump and governor assembly as a unit to have it services. Do not open or break any seals on the pump or the warranty is void. The injection pump has an identification plate attached to the pump body.

FUEL FLOW

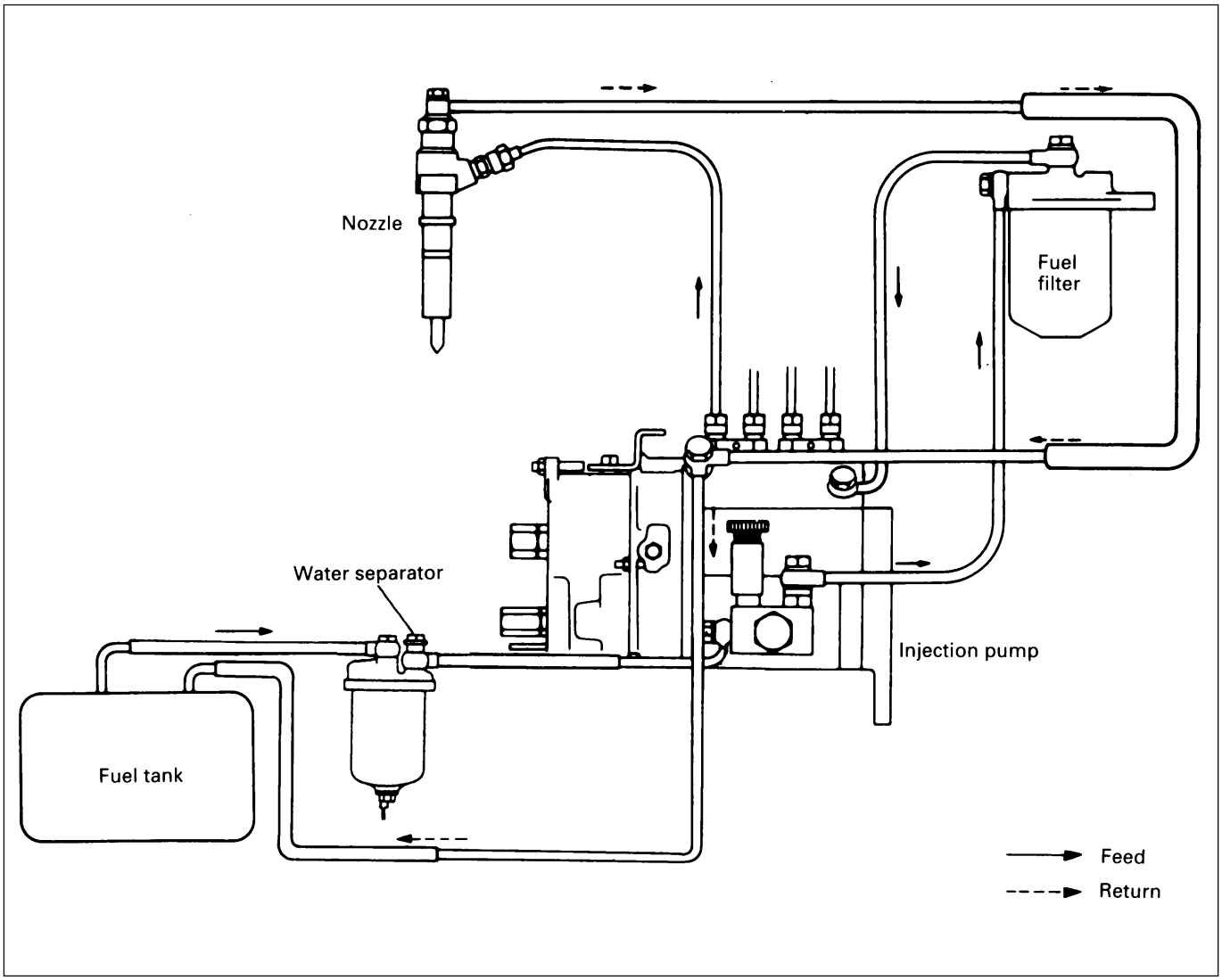

6C-3-1.tif

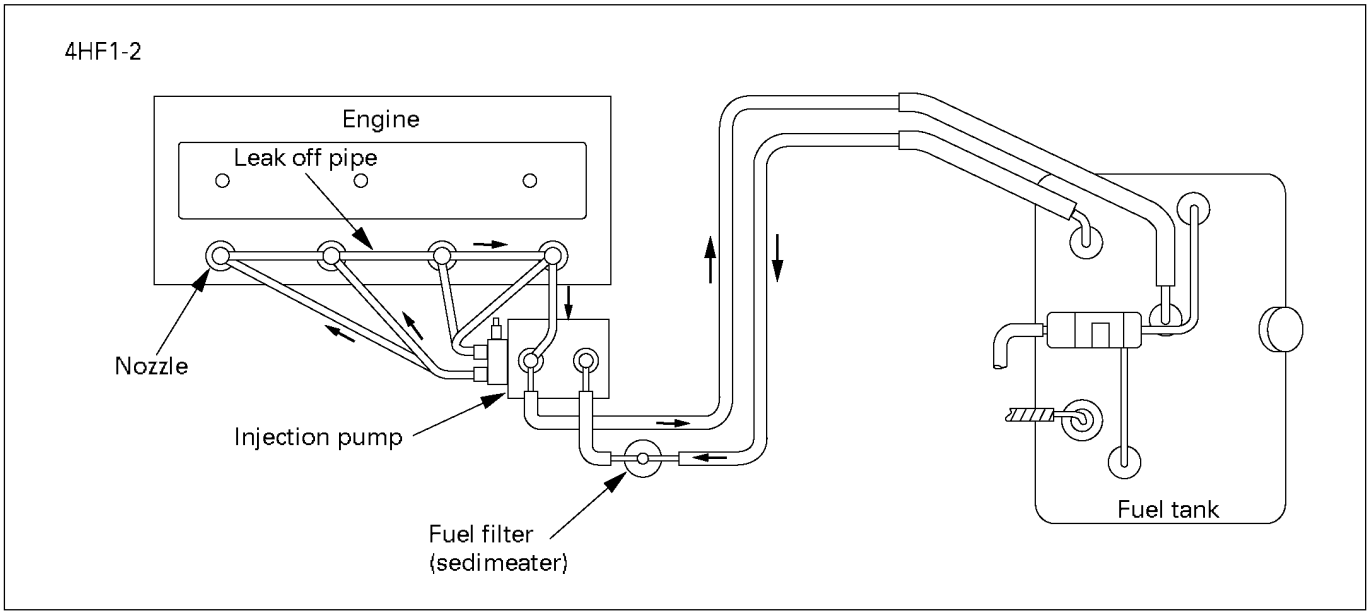

040LX005.tif

Aneroid Compensator Function

The bellows in the aneroid compensator is provided with an initial set force by the aneroid compensator spring (10) and is compressed by the push rod C (11). As the atmospheric pressure drops, the bellows (9) begins to expand against the force of the aneroid compensator spring (10), which in turn causes the push rod B (13), through the push rod C (11) and the boost compensator lever (12)F, to move to the left.

Then the push rod B (13) comes into contact with the U-shaped lever (16) and, as the expanding bellows over come the force of the cancel spring installed on the U-shaped lever (16), causes the U-shaped lever to turn clockwise. Because the bottom of the sensor lever (15) is in touch with the torque cam (51), the torque cam (51) then works as a pivot on which the top of the sensor lever (15) moves to the right together with the U-shaped lever (16). At the same time, the control rack (19), which is hooked on the sensor lever (15), moves toward the governor to reduce fuel injection.

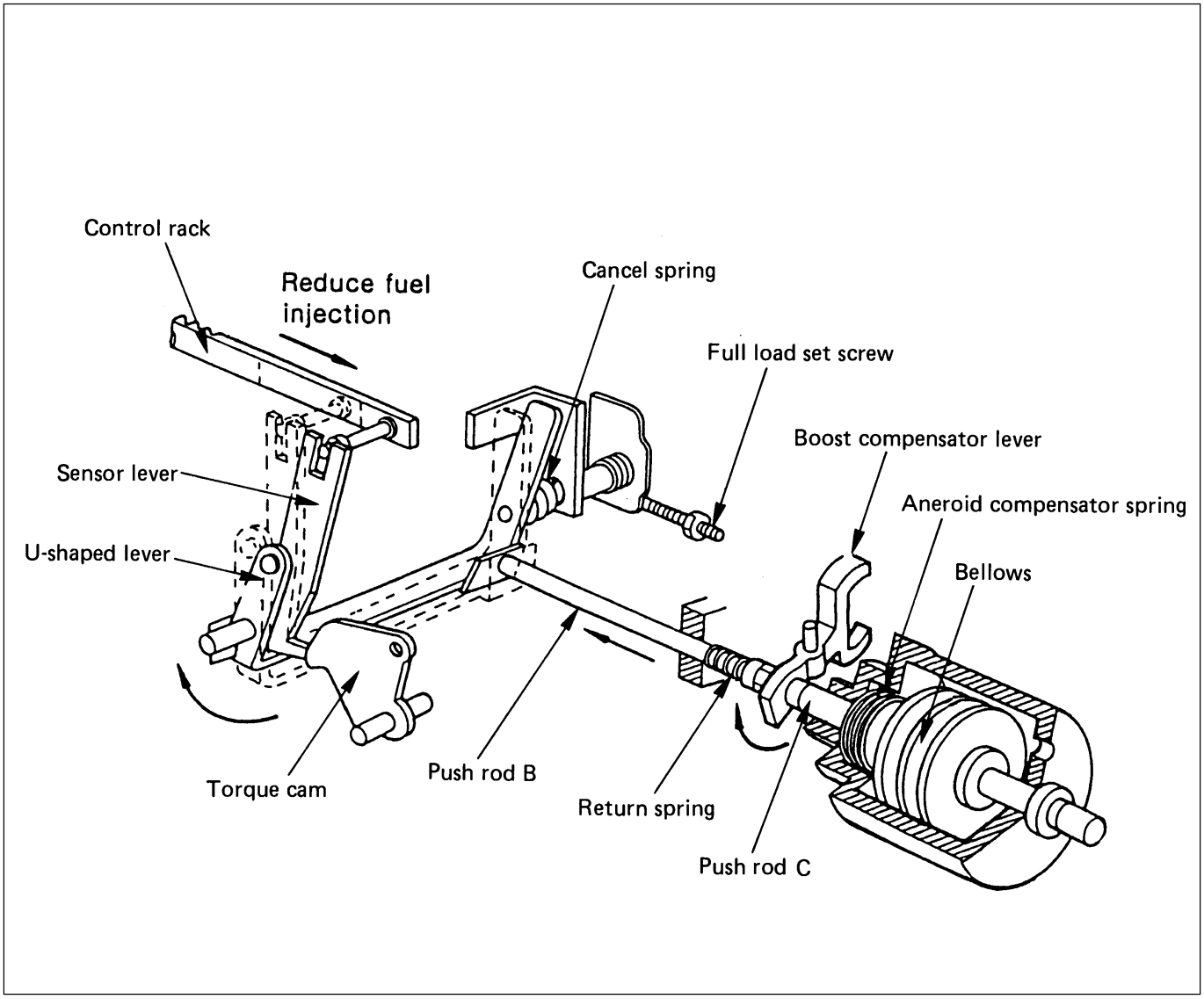

6C-4-1.tif

BRIEF EXPLANATION OF EMISSION AND ELECTRICAL CONTROL SYSTEM

MITICS (Mechanically Integrated Timing and Injection Control System)

4HE1-TC

The Mechanically Integrated Timing and Injection rate Control System(MITICS) utilizes mechanical control, in comparison with TICS systems, which utilize electronic control.

MITICS is equipped with the RLD-M type governor, which contains a pre-stroke control mechanism. With this, pre-stroke position (ie., beginning of static injection) can be varied to control injection timing and injection rate (i.e., the fuel injection quantity injected from the nozzle per cam angle degree).

This enables high injection rates1 in the low and medium speed ranges through a short injection interval, thus contributing to higher engine torque and cleaner exhaust.

MITICS was developed in response to the demands of medium sized diesel engines for low cost, low fuel consumption, high output and cleaner emissions.

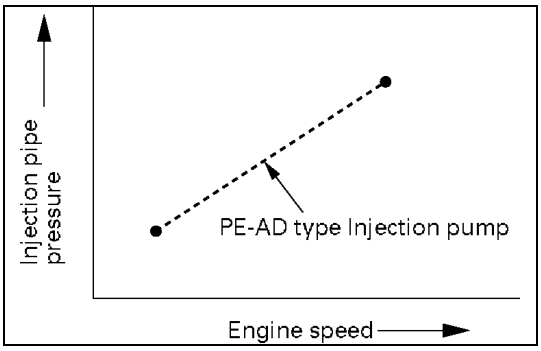

040LW006.tif

High injection rates using a short injection interval.

- The speed at which the injection pump plunger rises slows as engine speed decreases and the pressure inside the injection pipe decreases. Because of this, the nozzle spray deteriorates and makes it impossible to obtain the proper fuel - air mixture.

  To obtain the proper mixture at low and medium speeds, it is necessary to increase the pressure inside the injection pipes using a short injection interval.

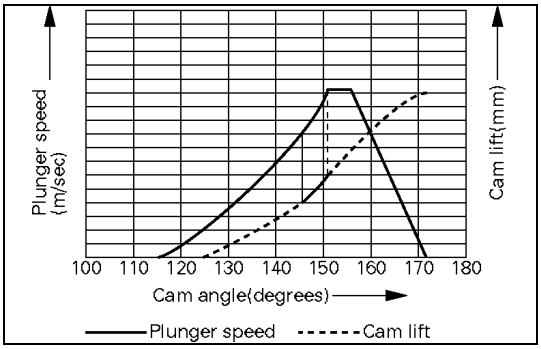

040LW007-1.tif

- The left hand figure shows plunger speed and cam lift in relation to cam angle. It can be seen from the graph that plunger speed increases together with cam lift.

  MITICS varies the beginning of injection position at low and medium speeds so that injection occurs when the plunger speed increases during the latter half of cam lift (shown by the bold line). At high speeds, injection is performed when the plunger speed decreases during the first half of cam lift to prevent an excessive increase in injection pipe pressure.

  This enables high pressures at low and medium speeds with a fast plunger speed. Thus, a fine fuel oil spray is injected into the cylinder from the nozzles within a short time to provide the proper mixture for combustion, helping to increase torque and keep exhaust emissions clean.

GOVERNOR (MODEL RLD-M)

4HE1-TC

The RLD-J type governor can be used with the MI, MITICS injection pumps, and was designed to have better control and endurance than the previous RLD type governor.

Although the basic construction is identical to that of the RLD type governor, the RLD-M type is larger to match the applicable pumps' larger size.

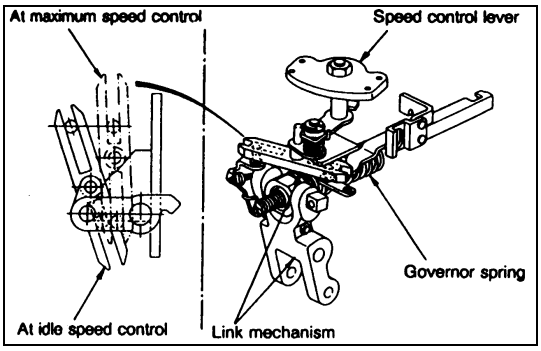

6C-6-1.tif

FEATURES

1. Variable speed control governor with decreased lever reaction force

As with the previous RLD type governor, RLD-M governor control is accomplished using the speed control lever to change the fulcrum of the internal link mechanism.

Consequently, as the reaction force of the governor spring does not act directly on the speed control lever, only a very small lever reaction force is exerted on the accelerator pedal.

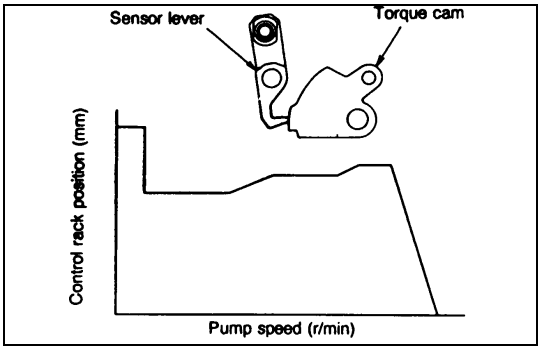

6C-6-2.tif

2. Set torque characteristics through internal torque cam

At full load, the tip of the sensor lever traces the face of the torque cam to determine the full load rack position and control the full load injection quantity.

Consequently, the torque characteristics demanded by the engine can be freely set by changing the shape of the torque cam face.

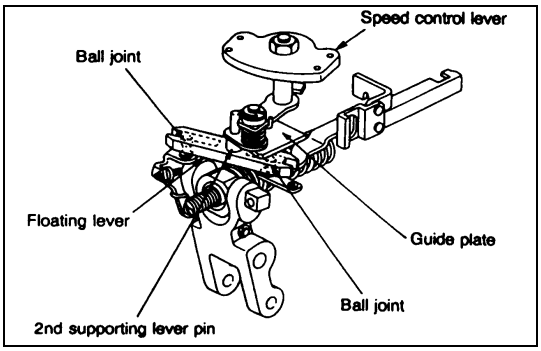

6C-6-3.tif

3. Improved control through internal guide plate

When the speed control lever is operated, the 2nd supporting lever's pin moves along the guide plate. The floating lever connected to the pin thus moves to change the ball joint fulcrum positions. In the intermediate to high speed ranges, the guide plate causes the floating lever to move to increase the lever ratio continuously from 1.1 (idling) - 6 (full speed). This increase in the lever ratio in the intermediate to high speed range improves speed droop.

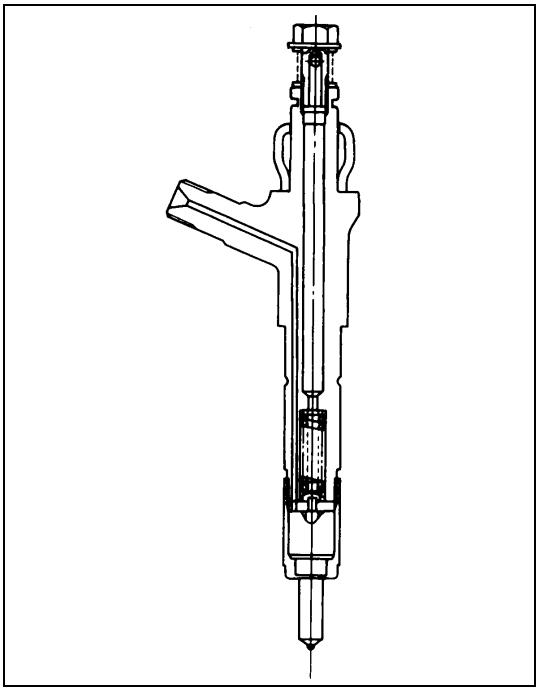

6C-7-1.tif

INJECTION NOZZLE

A Bosch hole type injection nozzle is used. It consists of the nozzle body and the needle valve assembly.

The injection nozzle assembly sprays pressurized fuel from the injection pump into the combustion chamber through the nozzle body injection orifice.

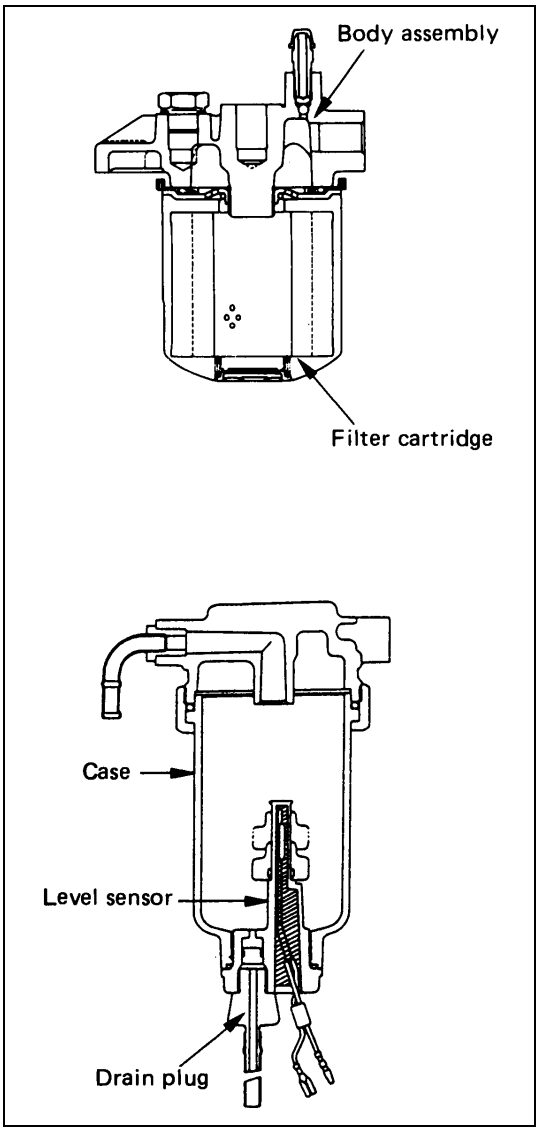

6C-7-2.tif

FUEL FILTER AND WATER SEPARATOR

A cartridge type fuel filter and a water separator are used along with the in-line type injection pump.

As the inside of the injection pump is lubricated by the fuel which it is pumping, the fuel must be perfectly clean. The fuel filter and the water separator remove water particles and other foreign material from the fuel before it reaches the injection pump.

The water separator has an internal float. When the float reaches the specified level, a warning light comes on to remind you to drain the water from the separator.

ON-VEHICLE SERVICE

FUEL FILTER ASSEMBLY (Except 4HF1-2 model)

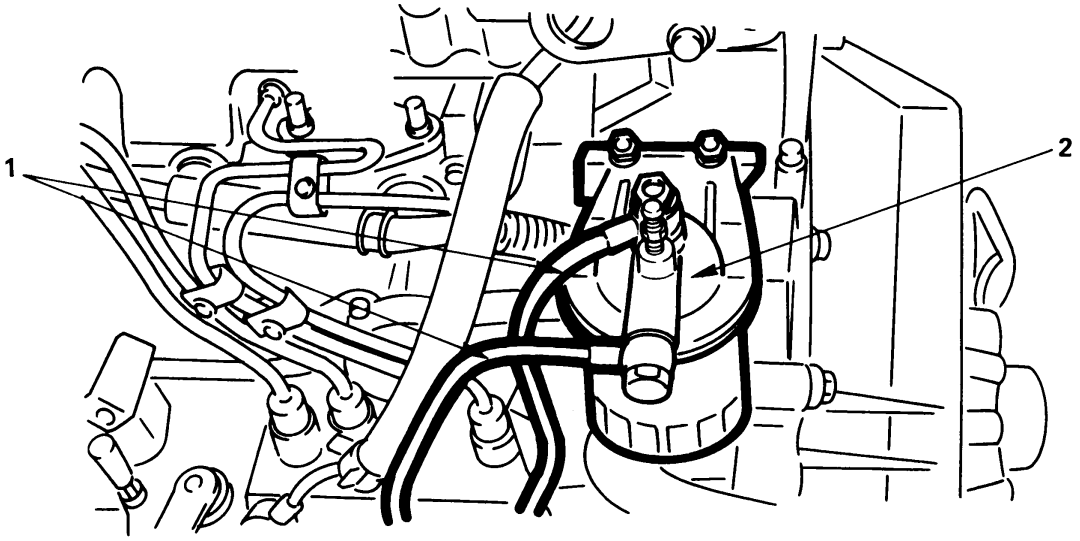

Removal steps
1. Fuel pipe
2. Fuel filter assembly

Installation steps
To install, follow the removal steps in the reverse order.

6C-8-1.tif

REMOVAL

Preparation

- Disconnect battery ground cable.
- Tilt the cab

1. **Fuel Pipe**
2. **Fuel Filter Assembly**

INSTALLATION

2. **Fuel Filter Assembly**

Fuel Filter Bracket Torque	N·m (kg·m/lb·ft)
34 (3.5/25)	

1. **Fuel Pipe**

Fuel Pipe Joint Bolt Torque	N·m (kg·m/lb·ft)
23 (2.4/17)	

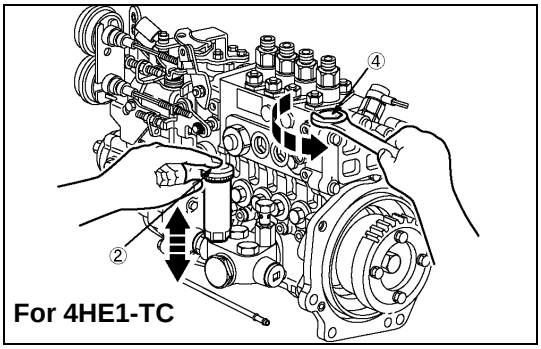

080LW001-1.tif

Air Bleeding

- Loosen the priming pump cap ②.
- Loosen the air bleeding plug; ③.
  (4HG1-T model only)
- Operate the priming pump.
  Pump the primer pump until fuel flow is free of air bubbles.
  (Except 4HG1-T model)
- Tighten the air bleeding plug ③.
  (4HG1-T model only)
- Loosen the bleeding plug ①.
- Operate the priming pump.
  Pump the primer pump until fuel flow is free of air bubbles.
- Tighten the bleeder plug ①.
- Operate the priming pump.
  Pump the primer pump until fuel flow is free of air bubbles.
  (Except 4HE1-TC model)
- Loosen the bleeding plug on the injection pump ④.
  (4HE1-TC model only)
- Operate the priming pump.
  Pump the primer pump until fuel flow is free of air bubbles.
  (4HE1-TC model only)
- Tighten the bleeding plug on the injection pump ④.
  (4HE1-TC model only)
- Lock the priming pump cap ②.

NOTE:
Check for fuel leakage from around the injection pump and the fuel filter.

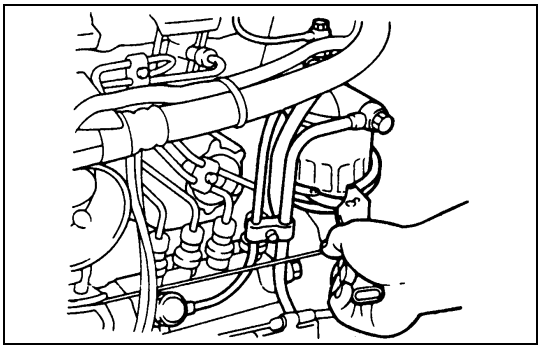

6C-8-3.tif

CARTRIDGE REPLACEMENT

REMOVAL

Replacement Procedure

1. Loosen the used fuel filter by turning it counterclockwise with the filter wrench.

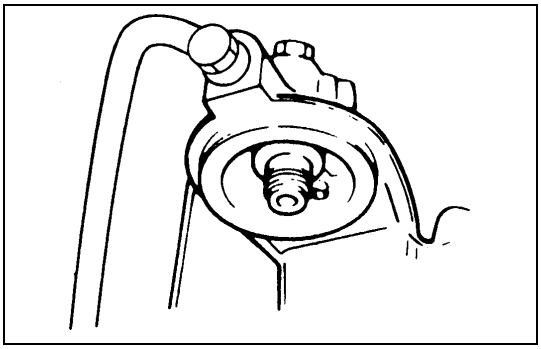

6c-8-4.tif

INSTALLATION

1. Clean the upper cover fitting face.
   This will allow the new fuel filter to seat properly.

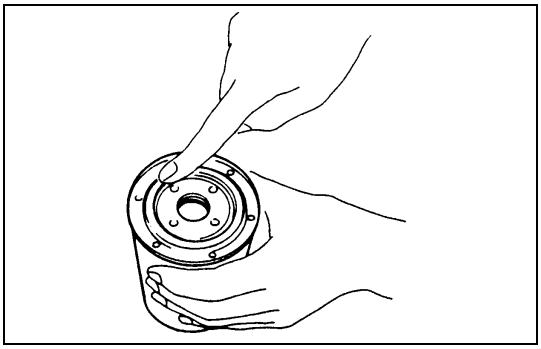

6C-10-1.tif

2. Apply a light coat of engine oil to the O-ring.
3. Supply fuel to the new fuel filter to facilitate bleeding.
4. Turn in the new fuel filter until the filter O-ring is fitted against the sealing face.
   Be very careful to avoid fuel spillage.
5. Use the filter wrench to turn in the fuel filter an additional 1/3 to 2/3 of a turn.
6. Operate the priming pump to bleed the air from the fuel line.
   Refer to “FUEL FILTER ASSEMBLY” for more detailed information.
7. Start the engine.
   Crank the engine for ten seconds or until it starts.
   If the engine does not start after ten seconds, repeat Step 6.

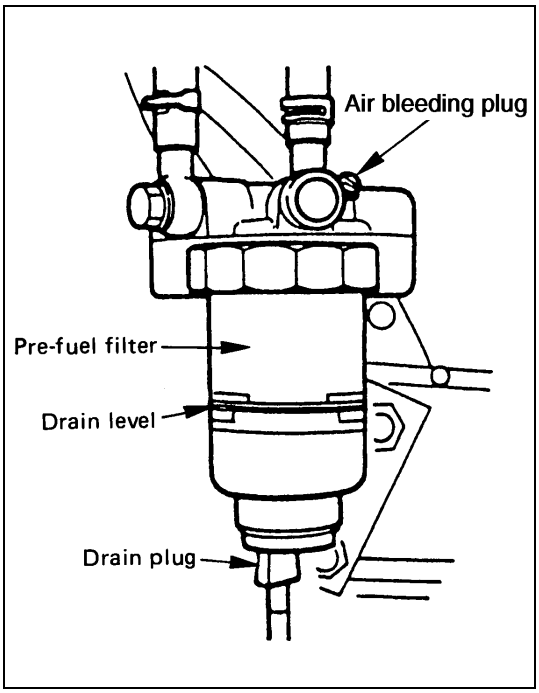

6C-10-2.tif

DRAINING THE PRE-FUEL FILTER

1. Loosen the air bleeding plug and drain plug by turning them counterclockwise.
2. Drain approximately 0.1 liters (3.4 oz) of water.
3. Securely tighten the drain plug.
4. Operate the primer pump on the fuel pump to bleed the fuel system.
5. Tighten the air bleeding plug.
6. Start the engine and check to be sure no fuel is leaking from the drain plug.
7. Make sure that the warning light in the instrument panel is off.
   (Except 4HE1-TC)

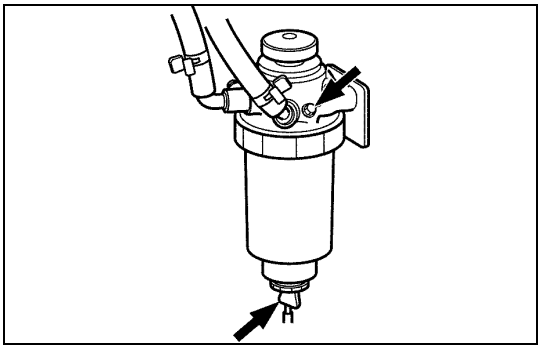

041LX001.tif

FUEL FILTER ASSEMBLY (4HF1-2 model only)

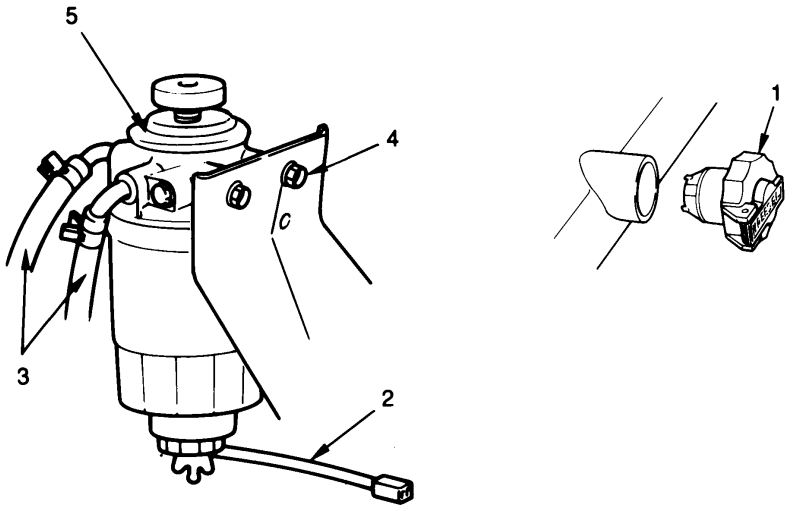

Removal steps
1. Filler cap
2. Lead switch wiring connector
3. Fuel hoses
4. Fuel filter installing bolt
5. Fuel filter assembly

Installation steps
To install, follow the removal steps in the reverse order.

6C-11-1.tif

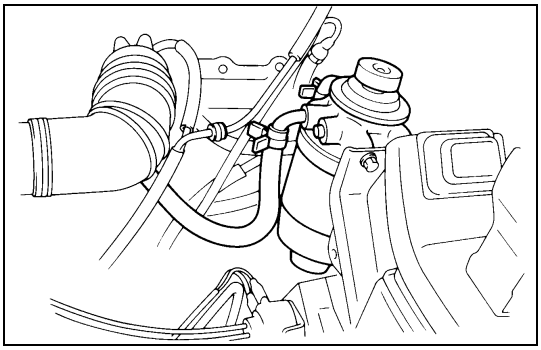

6C-11-2.tif

REMOVAL

Preparation
- Disconnect battery ground cable.

1. **Filler cap**
2. **Lead switch wiring connector**
3. **Fuel hose**
   - Draw out inlet and outlet hoses from the fuel filter and cork the hoses to prevent fuel outflow.
4. **Fuel filter installing bolt**
5. **Fuel filter assembly**

INSTALLATION

5. **Fuel filter assembly**
4. **Fuel filter installing bolt**
3. **Fuel hose**
   - Connect the inlet hose and outlet hose.
2. **Lead switch wiring connector**
1. **Filler cap**

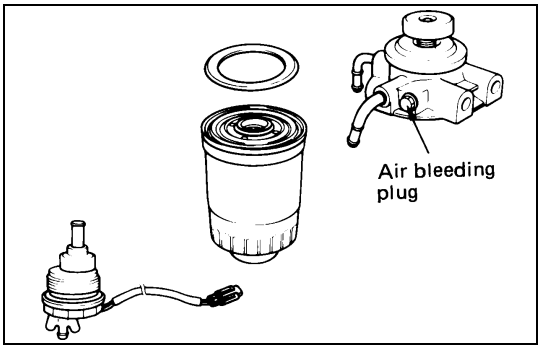

6C-12-1.tif

CARTRIDGE REPLACEMENT

Removal

1) Remove the cartridge using a filter wrench.
   Special Tool
   Filter wrench: 5-8840-0253-0
2) Remove the sedimenter/center.

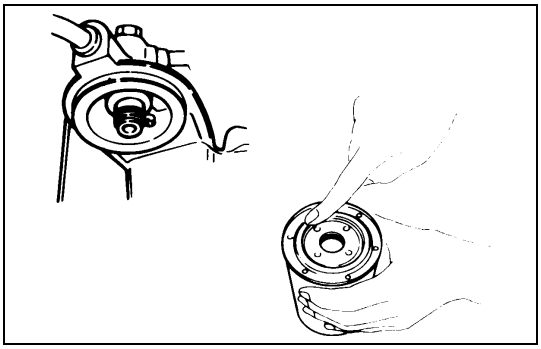

6C-12-2.tif

Reassembly

1) Fit the sedimenter/center in a new cartridge.
2) Clean the cartridge mounting surface of the filter body so that the new cartridge can be seated completely.
3) Apply engine oil thinly to the new cartridge O-ring.
4) Fill the new cartridge with light oil to facilitate air bleeding.
5) Tighten the cartridge until the O-ring comes into contact with the sealing surface. Sufficient care should be taken not to spill the light oil.
   Give 1/3 to 2/3 of a turn using a filter wrench.
   Special Tool
   Filter wrench: 5-8840-0253-0

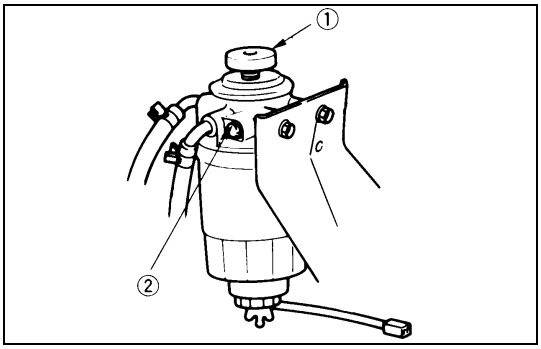

6C-12-3.tif

Air Bleeding

1) Actuate the priming pump 1 to send the air in the fuel system to the injection pump.
2) Loosen the sedimenter air bleeding plug 2 and operate the priming pump until no bubbles appear.
3) Tighten the air bleeding plug completely.
4) Try to start the engine. If the engine is not started within 10 seconds, air bleeding should be conducted once again.
5) Check that there is no fuel leak, and then tighten the priming pump completely.

Water Drain

If more than specified has collected, the warning light is lit. Under this condition, follow the following water drain procedure:

1) Place a container (Approximately 0.2 liters capacity) beneath the drain plug on the separator.
2) Loosen the drain plug and air bleeding plug.
3) After draining, tighten the drain plug.
4) Operate the priming pump several times again and check for fuel leak.
5) Tighten the air bleeding plug.
6) Make sure that the warning light in the instrument panel is off.

INJECTION NOZZLE ASSEMBLY

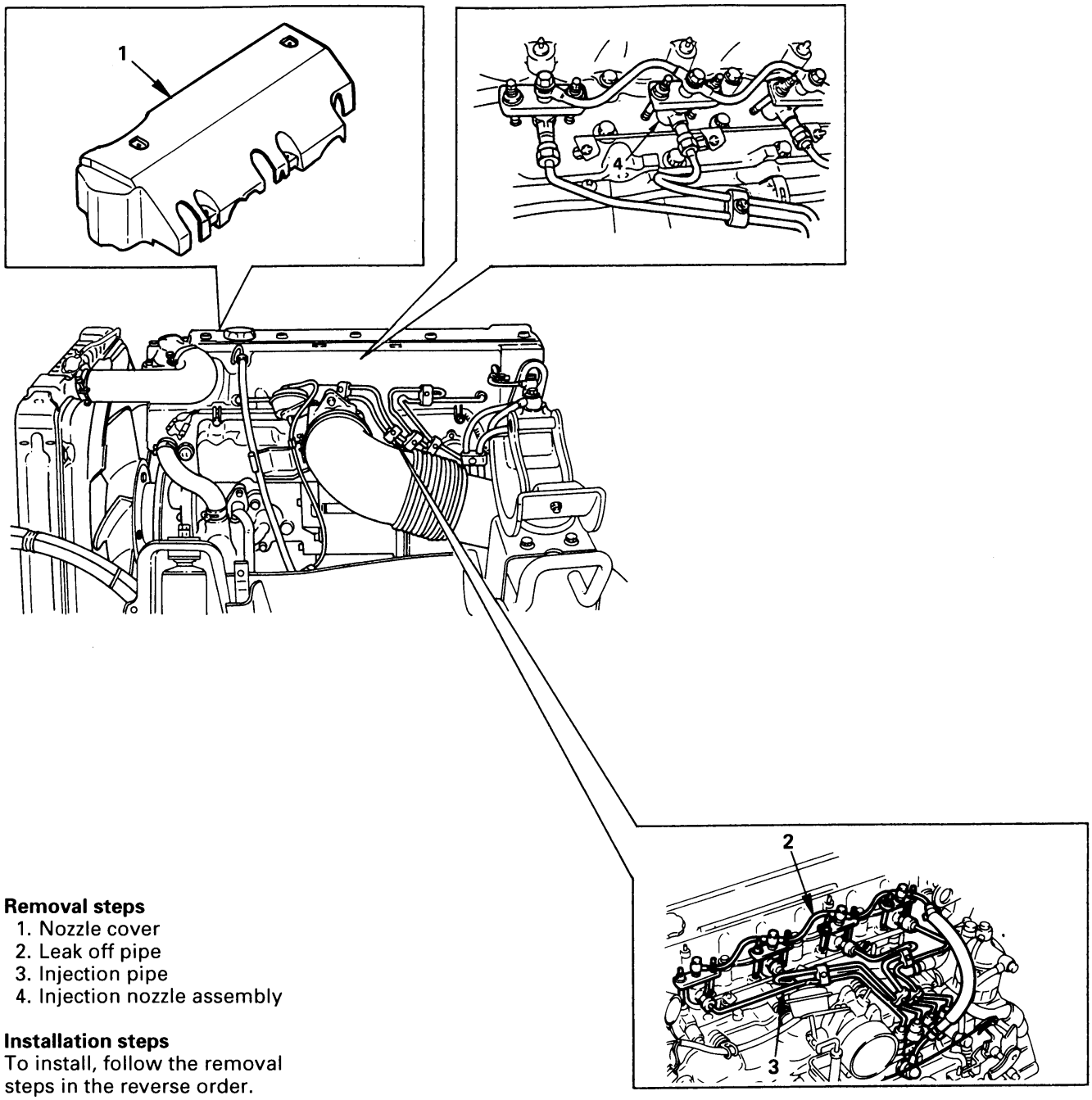

Removal steps
1. Nozzle cover
2. Leak off pipe
3. Injection pipe
4. Injection nozzle assembly

Installation steps
To install, follow the removal steps in the reverse order.

6C-13-1.tif

REMOVAL

Preparation

- Disconnect battery ground cable.
- Tilt the cab.

1. Nozzle Cover

2. Leak-Off Pipe

4HE1-TC (Engine)

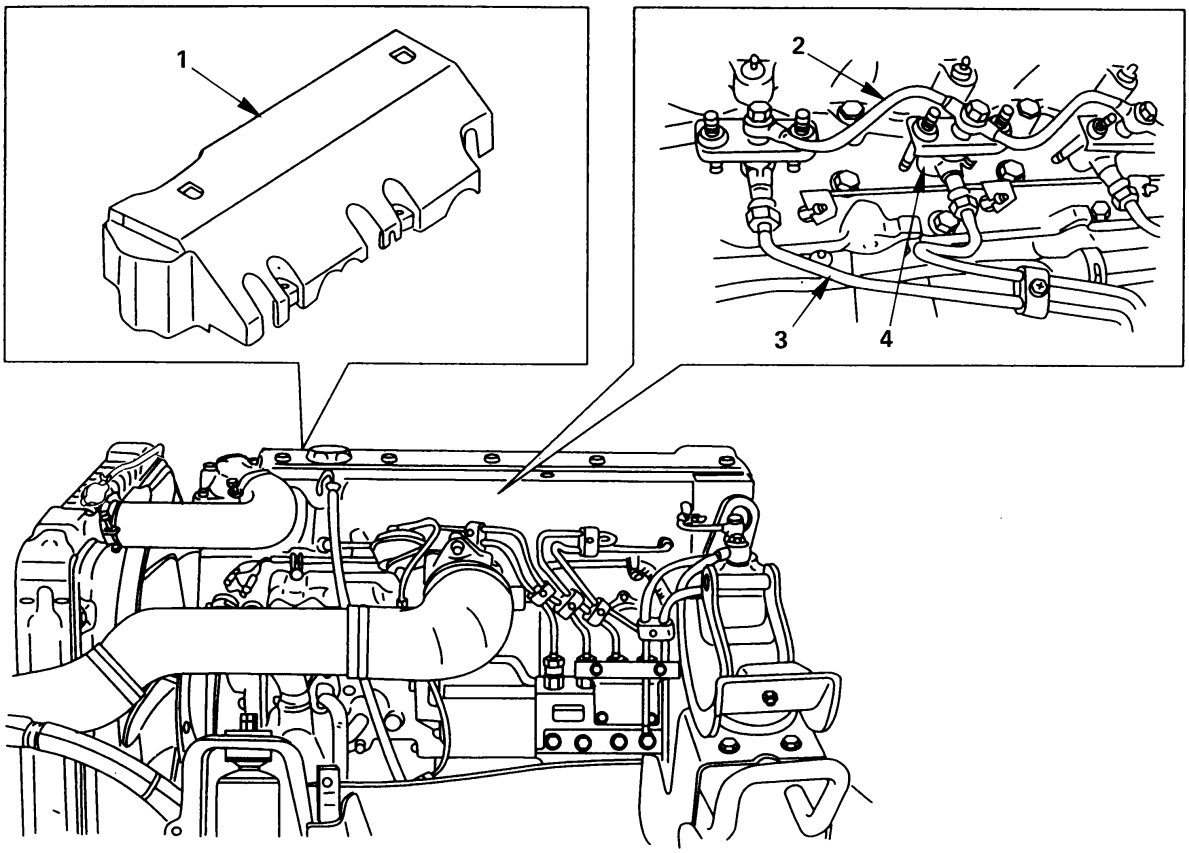

1. Nozzle cover
2. Leak off pipe
3. Injection pipe
4. Injection nozzle assembly

6C-14-1.tif

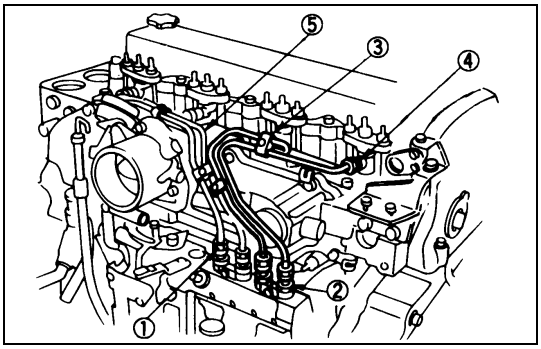

6C-15-1.tif

3. Fuel Injection

1) Loosen the injection pipe sleeve nuts ①.
   Do not apply excessive force to the injection pipes ⑤.
2) Loosen the injection pipes clips ③.
3) Remove the injection pipe assembly.
   Plug the delivery valve holder ② ports and nozzle holder ④ ports with caps to prevent the entry of foreign material.

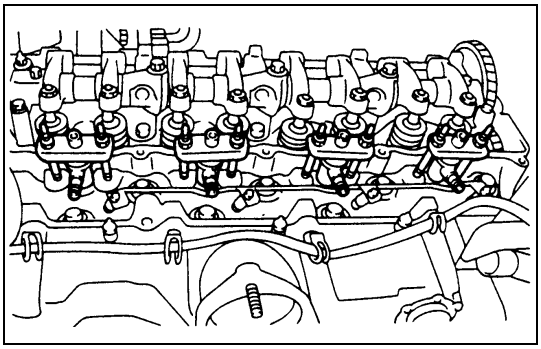

6C-15-2.tif

4. Injection Nozzle Assembly

Mark the nozzle holder assemblies fitting positions by tagging each nozzle holder assembly with the cylinder number from which it was removed.

INSPECTION

Before disassembling the injection nozzle assembly, check nozzle opening pressure, spray pattern, chatter and oil leakage.

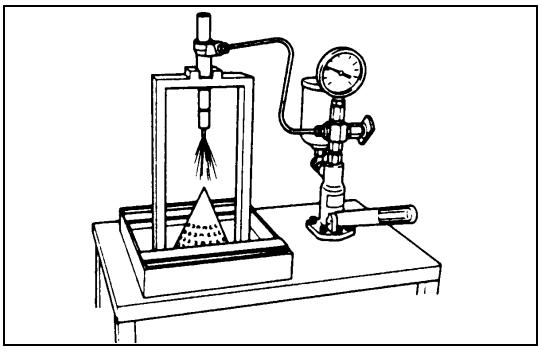

6C-15-3.tif

Opening Pressure

Use a nozzle tester to check the injection nozzle opening pressure.

If the opening pressure is above or below the specified value, the injection nozzle must be replaced or adjusted.

Injection Nozzle Opening Pressure Mpa (kg/cm^2/psi)

4HF1/4HF1-2/4HG1		18.14 (185/2,631)
4HE1-TC		21.57 (220/3,128)
4HG1-T	1st 2nd	18.1 (185/2,631) 21.1 (215/3,057)
4HE1-T	1st 2nd	17.65 (180/2,560) 21.57 (220/3,128)

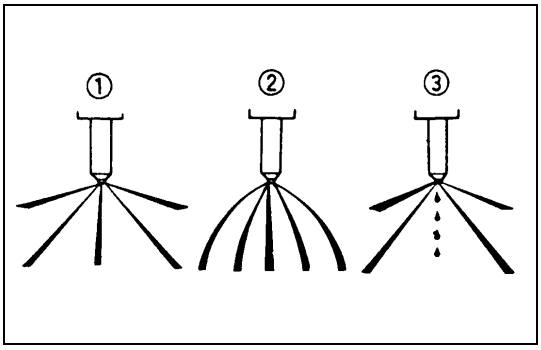

6C-15-4.tif

Spray Pattern

Check the spray pattern

Refer to the illustration.

Spray Condition

- Correct
- Incorrect (Restrictions in orifice)
- Incorrect (Dripping)

If the spray condition is bad, the injection nozzle must be replaced or adjusted.

Leakage

Hold the tester handle to about 2070 kPa (300 psi) below the opening pressure. If no drops of fuel fall from the nozzle tip within 10 seconds, the nozzle is not leaking

Chatter

An easily audible chatter at all pump lever speeds should be heard.

WARNING:

TEST FLUID FROM THE INJECTION NOZZLE WILL SPRAY OUT UNDER GREAT PRESSURE. IT CAN EASILY PUNCTURE A PERSON'S SKIN. KEEP YOUR HANDS AWAY FROM THE INJECTION NOZZLE TESTER AT ALL TIMES.

DISASSEMBLY

Clamp the injection nozzle holder in a vice.

1. **Flange**

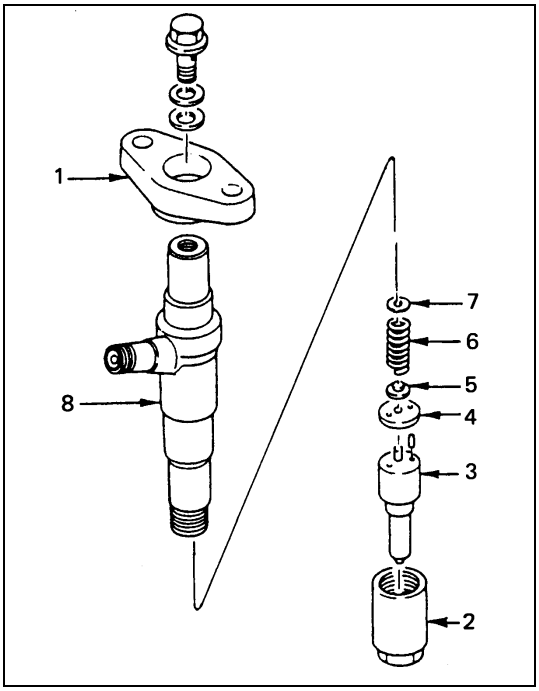

6C-16-1.tif

2. **Retaining Nut**

   Use a wrench to remove the injection nozzle retainer nut.

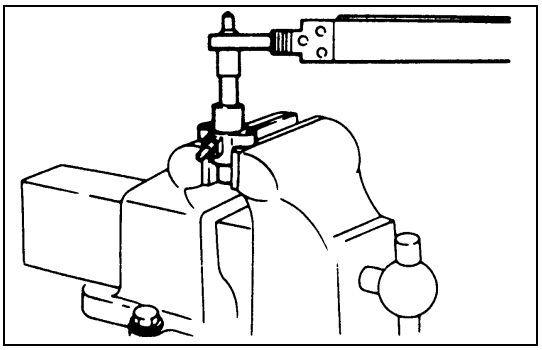

6C-16-2.tif

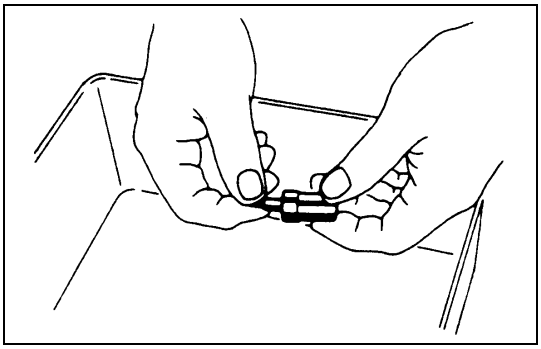

6C-17-1.tif

3. **Injection Nozzle**
   Keep the nozzle along with the needle valve separately to maintain the original nozzle to needle valve combination.
4. **Spacer**
5. **Spring Seat**
6. **Nozzle Spring**
7. **Adjusting Shim**
   Keep the adjusting shims in the original groups to hold the initial shim to nozzle spring combination.
8. **Nozzle Holder Body**

CAUTION

- **Wash all the parts removed and arrange them on a cylinder basis, care should be taken not to miss any parts.**
- **Soak the nozzle ASM in a parts receptacle filled with light oil.**
- **Care should be taken not to miss shim, if used.**

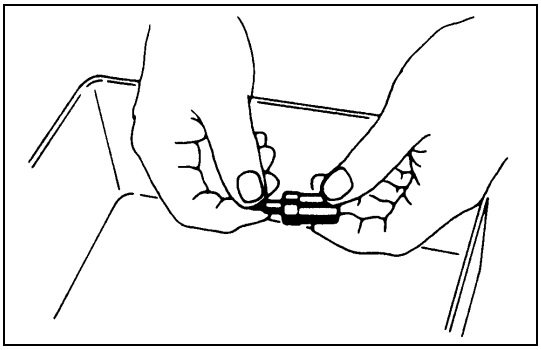

6C-17-2.tif

INSPECTION

Injection Nozzle Needle

1) Remove the nozzle from the nozzle body.
2) Carefully wash the nozzle needle and the nozzle body in clean diesel fuel.
3) Check that the nozzle needle moves smoothly inside the injection nozzle body.
   If the nozzle does not move smoothly, it must be repaired (See “Nozzle Lapping Procedure” below).

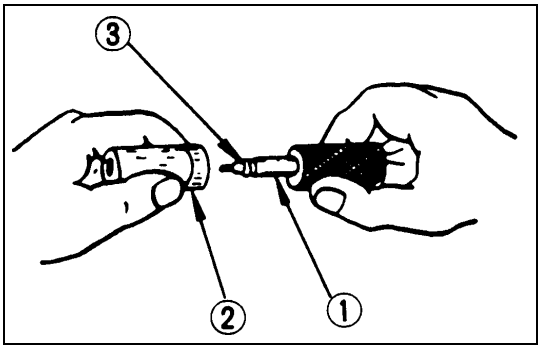

6C-17-3.tif

Nozzle Lapping Procedure

1) Lap the nozzle needle ① and the nozzle body ② by applying a compound of oxidized chrome and animal oil ③.

NOTE:

Do not apply an excessive amount of the oxidized chrome and animal oil compound to the injection needle valve seat area.

2) Carefully wash the needle valve and the nozzle body in clean diesel fuel after lapping.

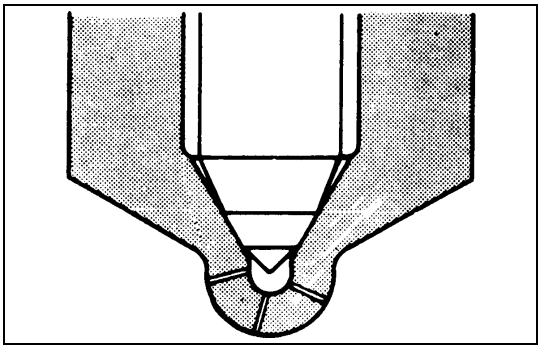

6C-18-1.tif

Nozzle Body and Needle Valve

Check the nozzle body and the needle valve for damage and deformation.

The nozzle and body assembly must be replaced if either of these two conditions are discovered during inspection.

NOTE:

New nozzles must be cleaned in a solvent to remove protective coating.

The nozzle body and needle must always be replace as an assembly.

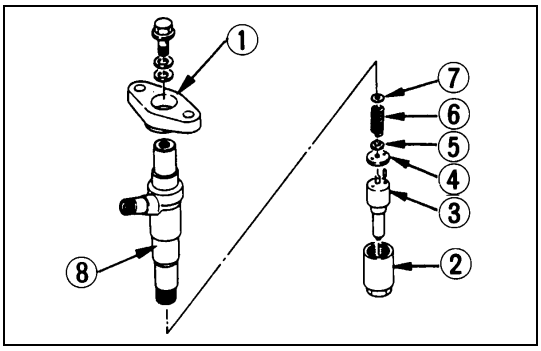

6C-18-2.tif

REASSEMBLY

8. **Nozzle Holder Body**
7. **Adjusting Shim**
6. **Nozzle Spring**
5. **Spring Seat**
4. **Spacer**

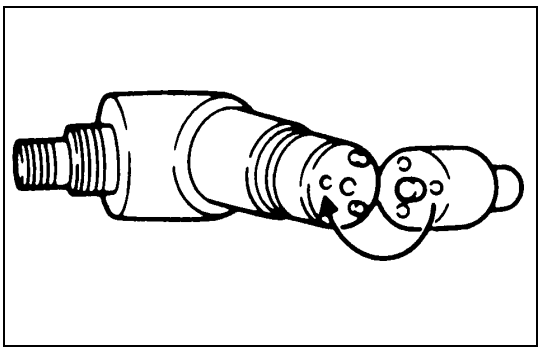

6C-18-3.tif

3. **Injection Nozzle**

   Install the nozzle dowel pin with it set to the dowel hose of the nozzle holder body.

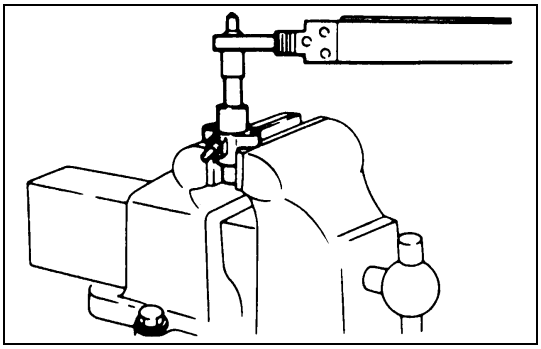

6C-18-4.tif

2. **Retaining Nut**

   Clamp the injection nozzle holder in a vice.

   Tighten the injection nozzle holder retaining nut to the specified torque.

Injection Nozzle Holder Retaining Nut Torque	N·m (kg·m/lb·ft)
34 (3.5/25)	

   Remove the injection nozzle holder from the vice.

1. **Flange**

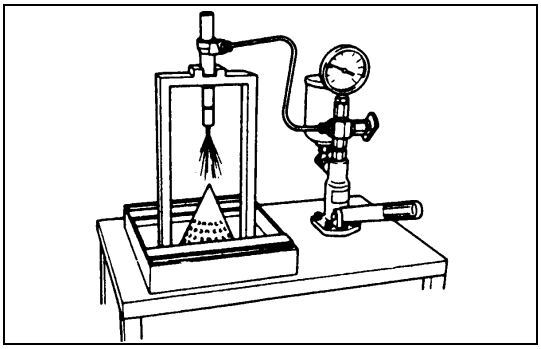

6C-19-1.tif

ADJUSTMENT OF INJECTION STARTING PRESSURE

After reassemble of the injection nozzle, recheck the opening pressure and spray condition.

Opening Pressure

Attach the injection nozzle holder to the injection nozzle tester.

Apply pressure to the nozzle tester to check that the injection nozzle opens at the specified pressure.

If the injection nozzle does not open at the specified pressure, install or remove the appropriate number of adjusting shims to adjust it.

Injection Nozzle Opening Pressure	Kpa (kg/cm^2/psi)
18,142 (185/2,631)	

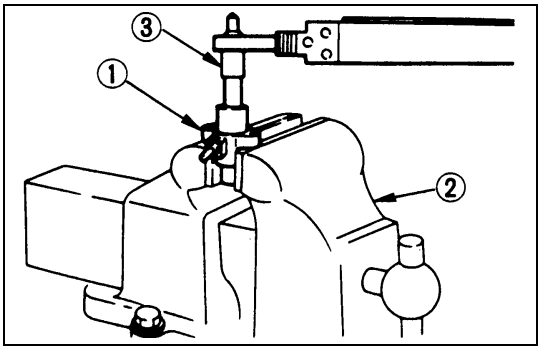

6C-19-2.tif

Opening Pressure Adjustment

1) Clamp the injection nozzle holder ① in a vise ②.
2) Use a wrench to remove the injection nozzle retaining nut ③.

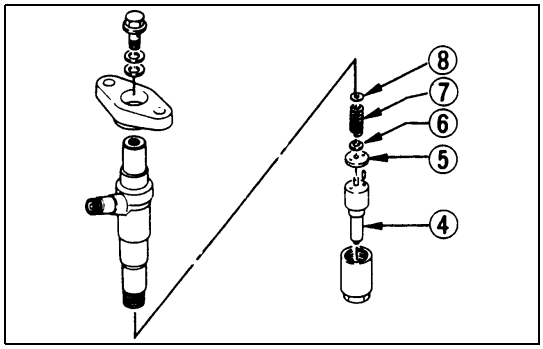

6C-20-1.tif

3) Remove the injection nozzle holder from the vise.
4) Remove the injection nozzle ④, the spacer ⑤, the spring seat ⑥ the spring ⑦ and the adjusting shim ⑧.
5) Install the new adjusting shim, the spring, the sprig seat, the spacer, the injection nozzle, and the retaining nut.
6) Clamp the injection nozzle holder in the vise.
7) Tighten the injection nozzle holder retaining nut to the specified torque.

Injection Nozzle Holder Retaining Nut Torque	N·m (kg·m/lb·ft)
34 (3.5/25)	

8) Remove the injection nozzle holder from the vise.
9) Attach the injection nozzle holder to the injection nozzle tester.
10) Apply pressure to the nozzle tester to check that the injection nozzle opens at the specified pressure.

    If the injection nozzle does not open at the specified pressure, install or remove the appropriate number or adjusting shims to adjust it.

    Removing or installing one shim will increase or decrease the nozzle opening pressure approximately 3.77 kg/cm^2 (53.6 psi/370 kPa).

Adjusting Shim Availability	mm(in)
Range	0.5 - 1.5 (0.02 - 0.06)
Increment	0.025 (0.001)
Total Number of Shims	41

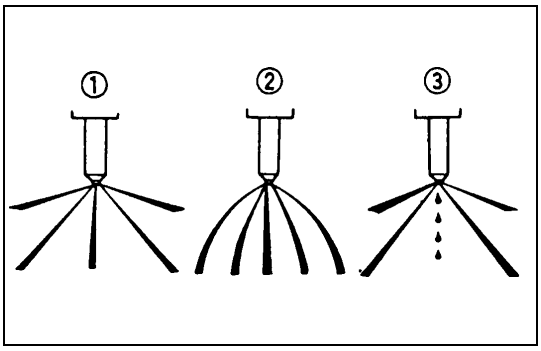

6C-20-2.tif

Spray Pattern

Check the spray condition.

Refer to the illustration.

Spray Condition

- Correct
- Incorrect (Restrictions in orifice)
- Incorrect (Dripping)

If the spray condition is bad, the injection nozzle must be replaced or adjusted.

Refer to “Adjustment”.

Note:

Adjust the nozzle in a well ventilated area. Do not inhale oil or spray injected from the nozzle.

4-1 Injection Nozzle (Two spring nozzle holder) (4HG1-T, 4HE1-T only)

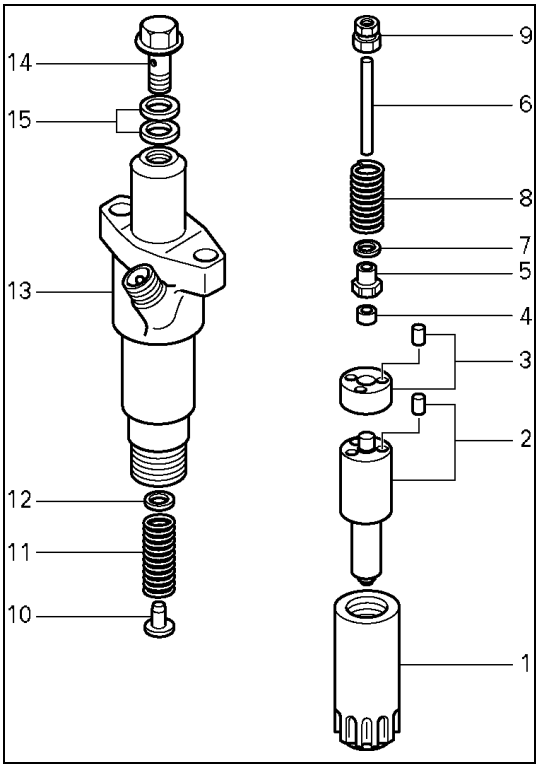

080LX002.tif

The two-spring nozzle holder has been developed to reduce NOx (Nitrogen Oxides) and particulates from direct injection diesel engine exhaust.

Disassembly

1. Retaining nut
2. Nozzle & pin
3. Spacer & pin
4. Lift piece
5. Spring seat
6. Push rod
7. Shim (Second nozzle opening pressure adjustment)
8. Second spring
9. Collar
10. Spring seat
11. First spring
12. Shim (First nozzle opening pressure adjustment)
13. Nozzle holder body
14. Eye bolt
15. Gasket

(1) Before disassembly remove carbon deposit from nozzle and nozzle holder using a wire brush and wash the outside nozzle holder assembly.

Caution:

Do not touch nozzle holes with the wire brush during cleaning it.

(2) Disassemble the nozzle holder assembly to numerical order.

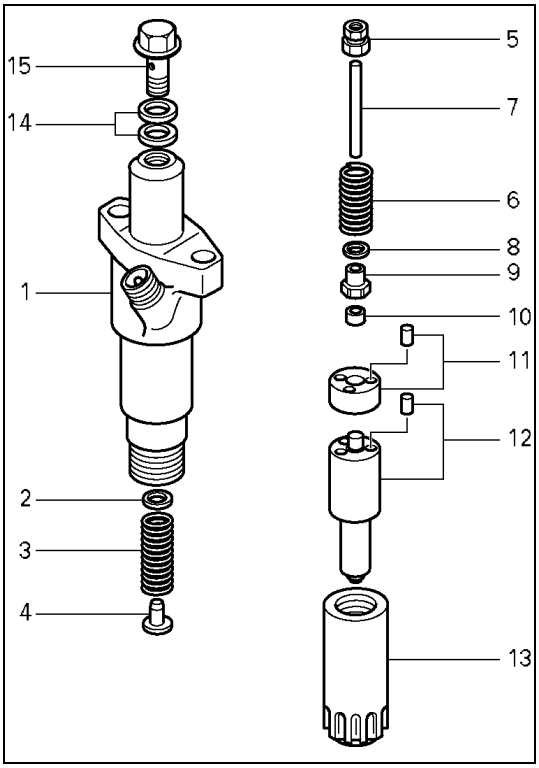

080LX003.tif

REASSEMBLY AND OPENING PRESSURE ADJUSTMENT

1. Nozzle holder body
2. Shim (First opening pressure adjustment)
3. First spring
4. Spring seat
5. Collar
6. Second spring
7. Push rod
8. Shim (Second opening pressure adjustment)
9. Spring seat
10. Lift piece
11. Spacer & pin
12. Nozzle & pin
13. Retaining nut
14. Gasket
15. Eye bolt

The nozzle holder is adjusted as the components are reassembled in the sequence above.

As adjustment of the two-spring nozzle holder is made in hundredths of a millimeter, clean the parts thoroughly in light oil to completely remove any dirt or foreign matter.

REASSEMBLY AND ADJUSTMENT PROCEDURE

1	First nozzle opening pressure adjustment	Adjust the first nozzle opening pressure using the shim.
2	Full needle valve lift confirmation	Confirm the full needle valve lift in accordance with the closed method.
3	Pre-lift confirmation	Confirm pre-lift in accordance with the closed method. **CAUTION:** **If not as specified, replace the nozzle assembly, lift piece, pins and spacer using the nozzle service kit.**
4	Second nozzle opening pressure confirmation	Confirm the second nozzle opening pressure in accordance with the closed method.
5	Second nozzle opening pressure adjustment	Adjust the second nozzle opening pressure using the shim.
6	Final inspection	Confirm the condition of the fuel spray with the nozzle and nozzle holder assembled.

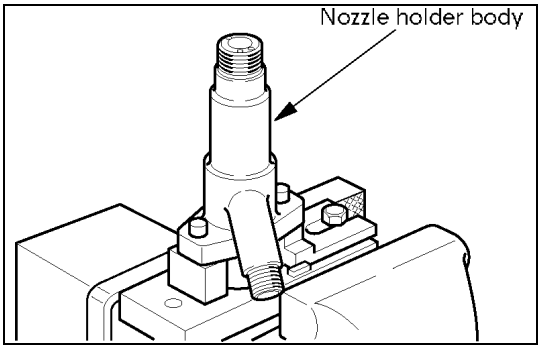

040MV015.tif

First nozzle opening pressure adjustment

1. Clamp the nozzle holder in a vise.

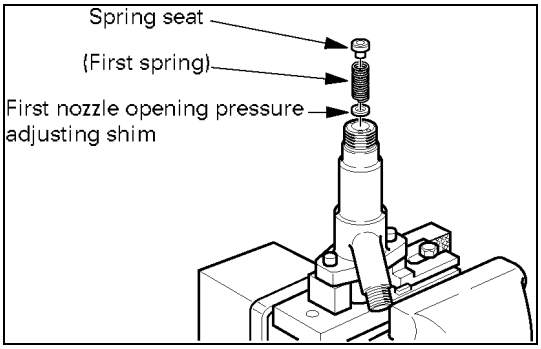

040MV016.tif

2. Install the shim, first spring and spring seat in the nozzle holder.

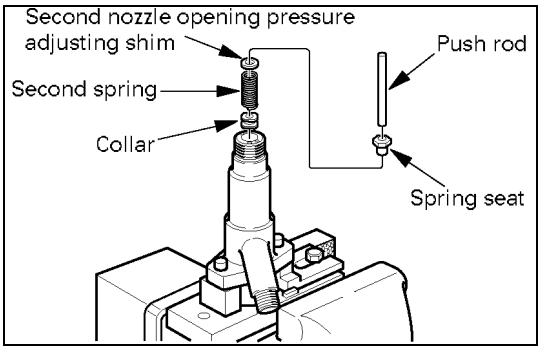

040MV017.tif

3. Install the collar, second spring, shim, spring seat and pushrod in the nozzle holder.

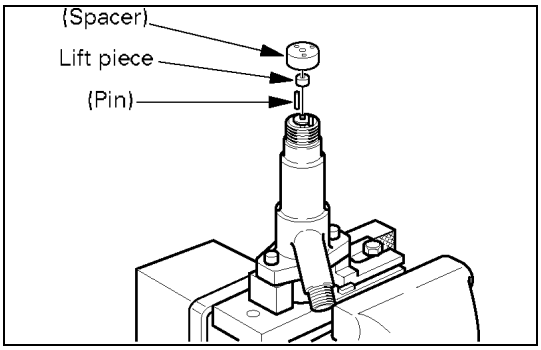

040MV018.tif

4. Install the pins, lift piece and spacer in the nozzle holder.

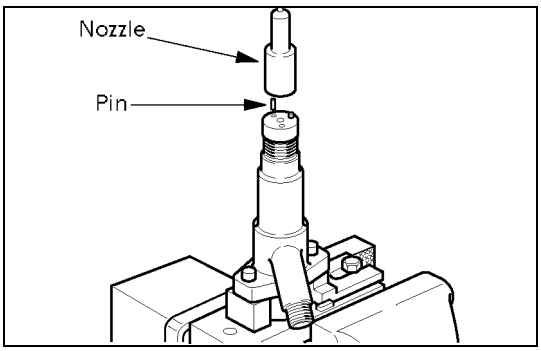

040MV019.tif

5. Install the pins in the spacer.
6. Install the nozzle on the spacer.

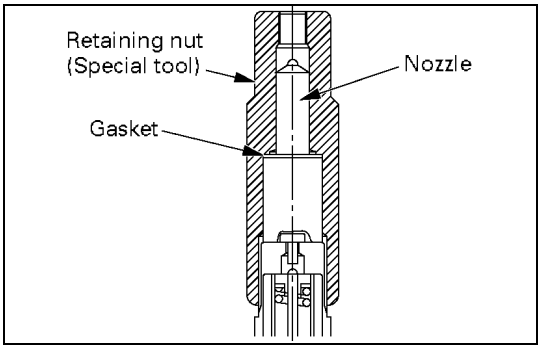

040MV010.tif

7. Hand-tighten the adjustment retaining nut together with the gasket to the nozzle holder.
   Retaining nut: 157892-3200 (ZEXEL)
   Gasket: 157892-5100 (ZEXEL)

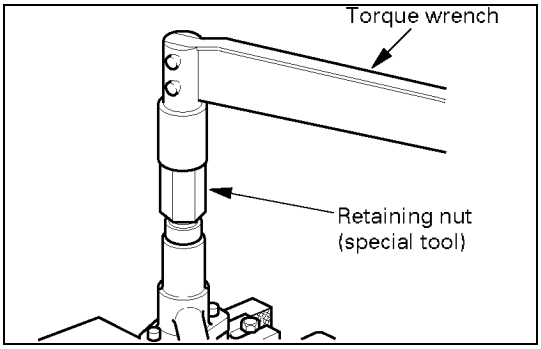

040MV014-1.tif

8. Tighten the adjustment retaining nut to the specified torque.
   Torque: 29 - 39 N·m (3.0 - 4.0 kg·m)

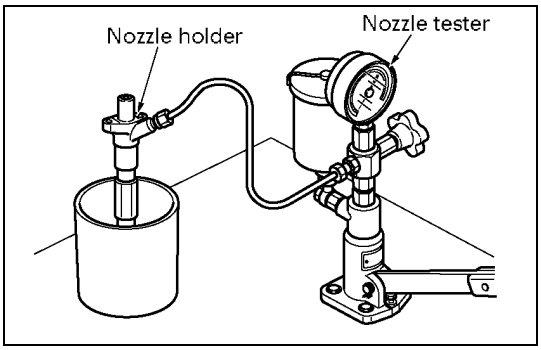

040MV030.tif

9. Set the nozzle holder to the nozzle tester.
10. Operate the nozzle tester and measure the first nozzle opening pressure.
11. If the first nozzle opening pressure is not as specified, disassemble the nozzle holder and replace the shim until the pressure is as specified.

CAUTION:

Use a micrometer to measure shim thickness.

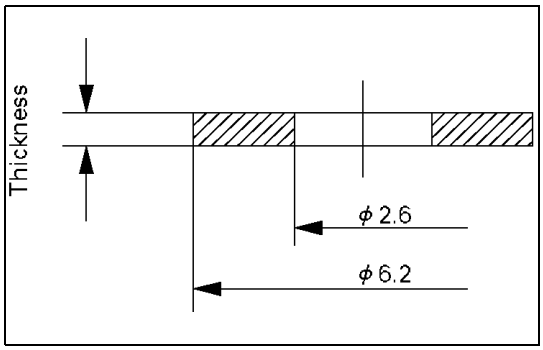

040LX010.tif

- First nozzle opening pressure adjusting shims

Part No. (ZEXEL)	Thickness (mm)
150538-9800	0.40
150538-9900	0.50
150539-0000	0.52
150539-0100	0.54
150539-0200	0.56
150539-0300	0.58
150539-0400	0.60
150539-0500	0.70

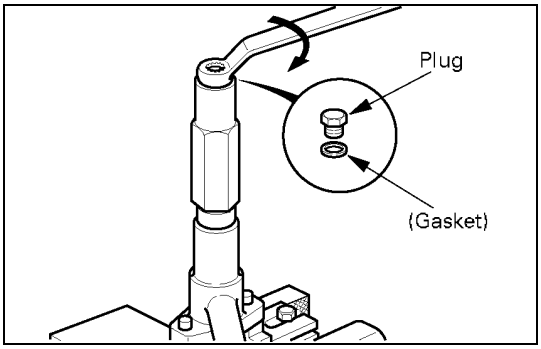

040MV013.tif

Full needle valve lift confirmation

1. Install the gasket and plug on the adjustment retaining nut.
   Gasket: 026508-1140 (ZEXEL)
   Plug: 157892-1600 (ZEXEL)

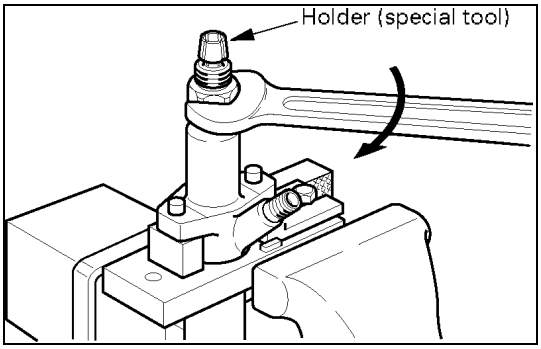

040MV012.tif

2. Position the nozzle holder with the nozzle facing down and install the dial gauge holder on the nozzle holder.
   Dial gauge holder: 157892-5000 (ZEXEL)

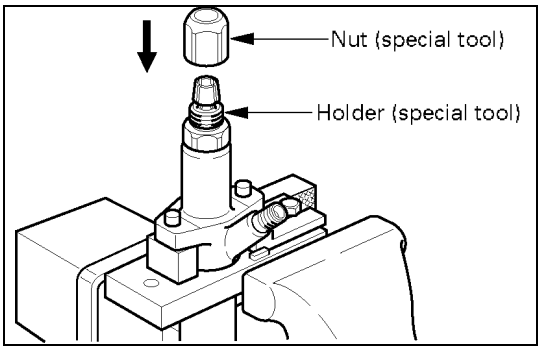

040MV011.tif

3. Install the nut on the dial gauge holder.
   Nut: 157892-1000 (ZEXEL)

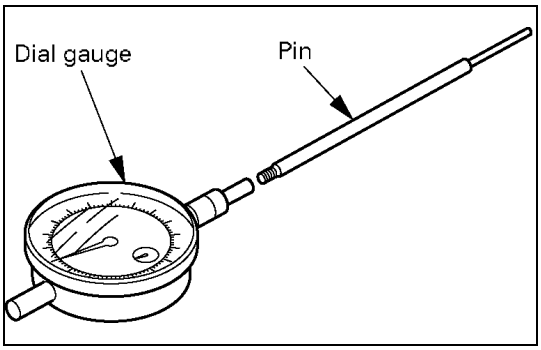

040MV029.tif

4. Install the pin to the dial gauge.
   Note:
   The lengths of the pins do not include the threaded portions.
   Pin (λ=100 mm): 157892-5200 (ZEXEL)
   Dial gauge: 157954-3800 (ZEXEL)

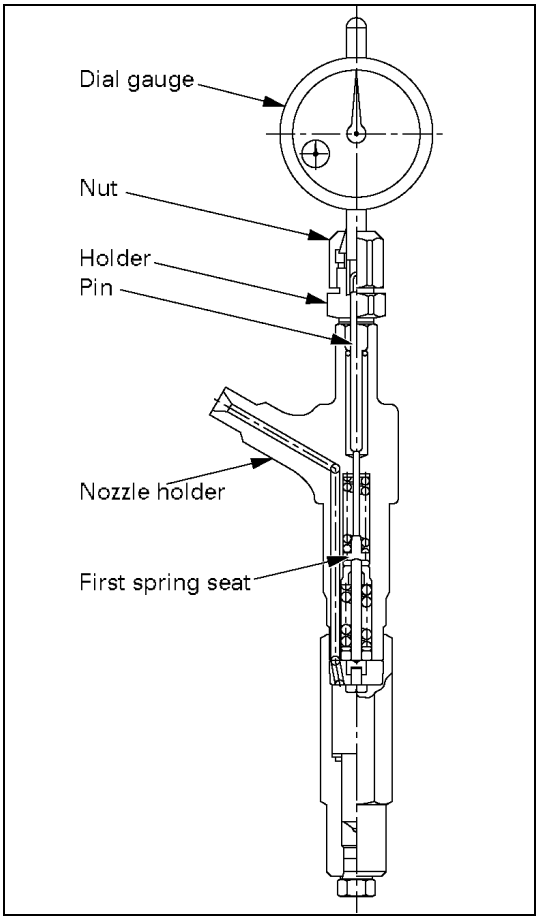

040MV009.tif

5. Secure the dial gauge to the nozzle holder using the nut so that the pin contacts the tip of the first spring seat.

CAUTION:

- **Secure the dial gauge so that a stroke of 2 mm can be measured.**
- **Do not over-tighten the nut as the dial gauge shaft may jam. (Confirm from the dial gauge that the shaft moves smoothly.)**

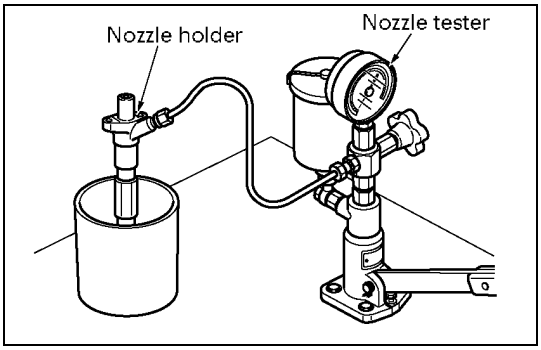

040MV030.tif

6. Set the nozzle holder to the nozzle tester and put needle to zero on the dial gauge.
7. Operate the nozzle tester to bleed any air from inside the retaining nut and to confirm that no fuel leaks.

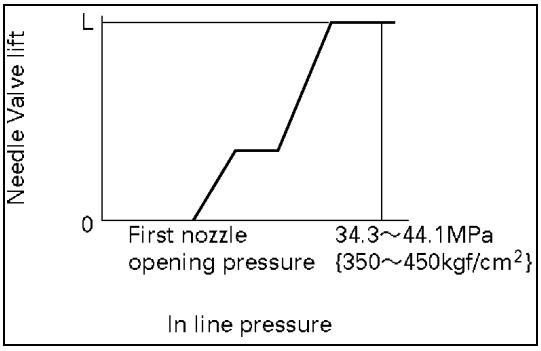

040MV008.tif

8. Operate the nozzle tester and increase the in-line pressure to 34.3 - 44.1 MPa (350 - 450 kg/cm^2) so that the nozzle's needle valve moves through its full lift.

   Record full lift 'L'. (Read dial gauge)

   Note:

   The above operation is used to determine whether the nozzle seat is worn and whether the nozzle assembly is in good condition.

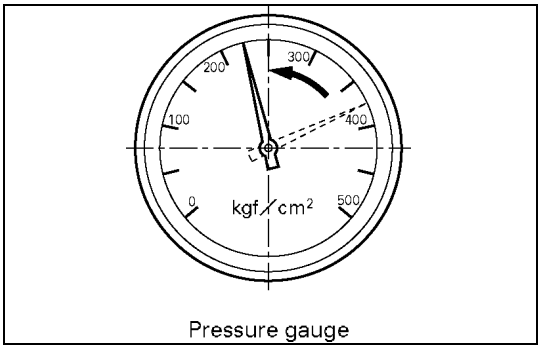

040MV007.tif

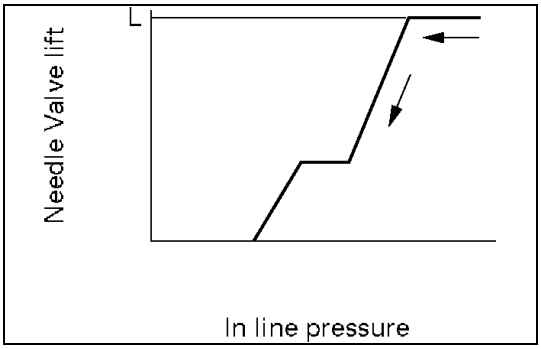

040MV006.tif

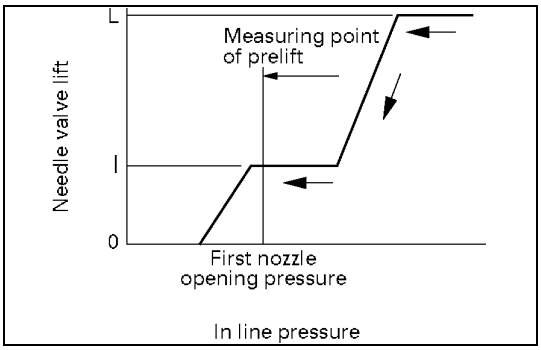

040MV025-1.tif

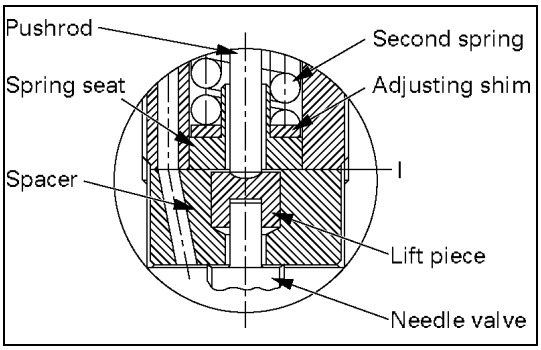

040MV005.tif

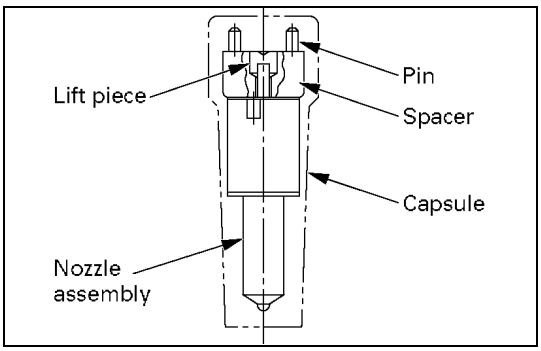

040MV031.tif

Pre-lift confirmation

1. With the needle valve at full lift, release the nozzle tester handle.

   Note:

   The in-line pressure will decrease and needle valve lift (as indicated on the dial gauge) will also decrease a little.

2. Read the needle valve lift 'λ' from the dial gauge indication (once the needle valve has descended when the second spring has stopped operating). Refer to the pre-lift measuring point for 'λ'.

Pre-lift measuring point:
Read the dial gauge at first nozzle opening pressure +approx 1 MPa (10 kg/cm^2).

Note:
This point can be found while the pressure is decreasing.

3. Confirm that pre-lift 'λ' is as specified.

Pre-lift		mm
4HG1-T	0.04	
4HE1-T	0.10	

4. If pre-lift is not as specified, replace the pins, lift piece, spacer and nozzle assembly as a set with the service kit.

   Service kit: ZEXEL

4HG1-T	105019-2310
4HE1-T	105019-1070

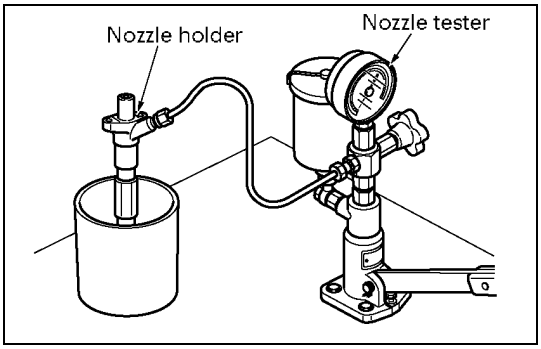

040MV030.tif

Second nozzle opening pressure confirmation

1. After pre-lift confirmation, operate the nozzle tester to increase in-line pressure to 34.3 - 44.1 MPa (350 - 450 kg/cm^2) so that the nozzle's needle valve moves through its full lift.

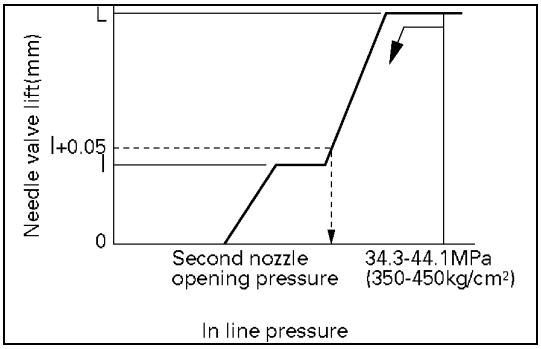

040MV022.tif

2. Release the nozzle tester handle so that in-line pressure decreases.

   Note:

   The in-line pressure will decrease and needle valve lift (as indicated on the dial gauge) will also decrease a little.

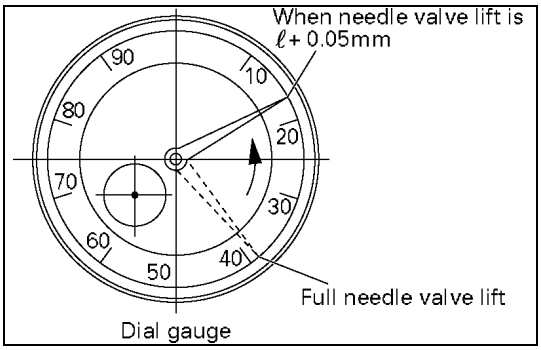

040MV024.tif

3. Then, read the pressure gauge indication (second nozzle opening pressure) the instant that the dial gauge indicates the specified needle valve lift (usually pre-lift λ + 0.05 mm).

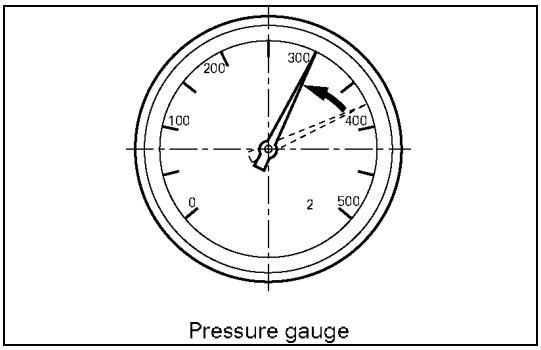

040MV026.tif

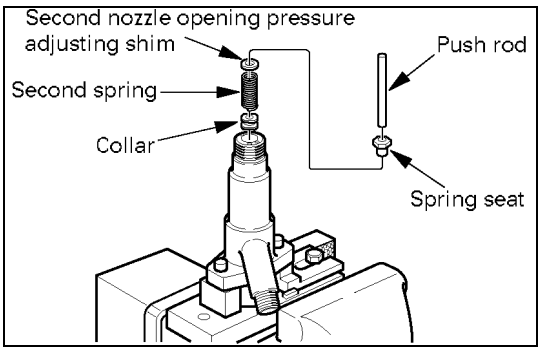

040MV017.tif

Second nozzle opening pressure adjustment

If the second nozzle opening pressure is not as specified, disassemble the nozzle from the nozzle holder and replace the shim until the pressure is as specified.

CAUTION:

- **Because the second opening pressure changes when the first opening pressure changes, the second opening pressure must be adjusted when the first opening pressure changes.**
- **Use a micrometer to measure shim thickness.**

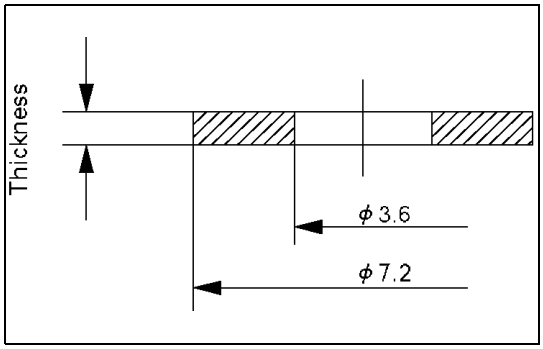

040LX009.tif

- Second nozzle opening pressure adjusting shims

Part No. (ZEXEL)	Thickness (mm)
150591-4000	0.40
150591-5000	0.50
150591-5200	0.52
150591-5400	0.54
150591-5600	0.56
150591-5800	0.58
150591-5900	0.59

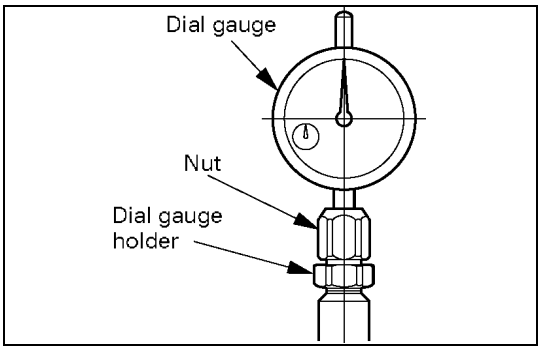

040MV028.tif

Final inspection

1. Remove the dial gauge, nut and dial gauge holder.

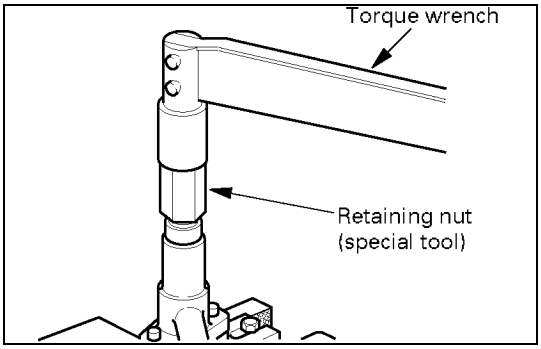

040MV014-1.tif

2. Remove the adjustment retaining nut and gasket.
3. Install the original retaining nut, confirm that the pins are inserted fully into the nozzle, and then hand-tighten the retaining nut. Then, tighten the original retaining nut to the specified torque.

   Torque: 59 - 79 N·m (6.0 - 8.0 kg·m)

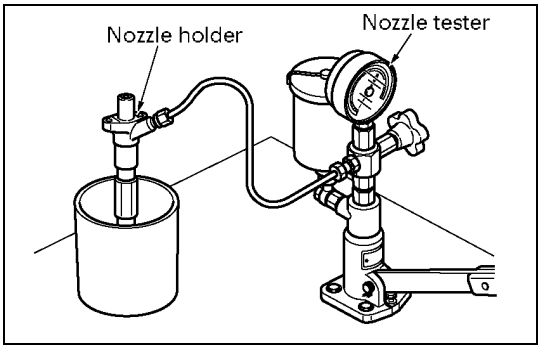

040MV030.tif

4. Set the nozzle holder to the nozzle tester and check first nozzle opening pressure, spray condition, seat oil tightness and each part for oil leaks.
5. When replacing the nozzle, replace the nozzle, lift piece, pins and spacer as a set with the nozzle service kit.

CAUTION:

Pre-lift will not be as specified if only the nozzle is replaced.

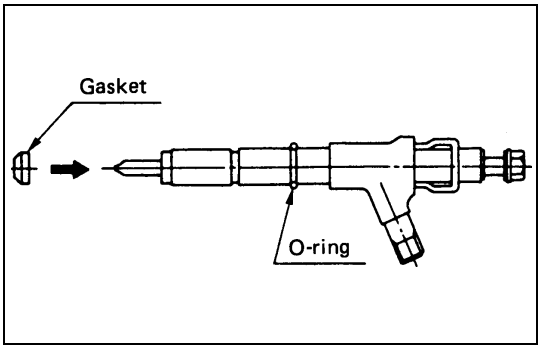

6C-30-1.tif

INSTALLATION

4. Injection Nozzle Assembly

1) Install a new injection nozzle gasket and O-ring to the nozzle holder, and then install the nozzle holder to the cylinder head as shown in the illustration.

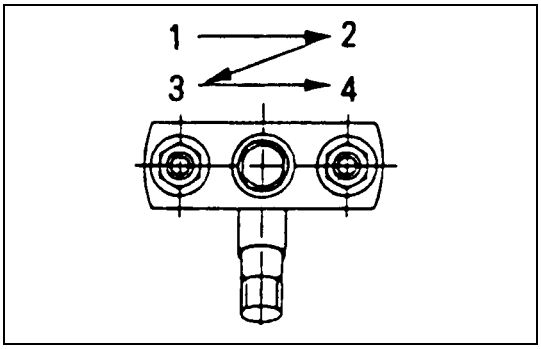

6C-30-2.tif

2) Tighten the nozzle holder flange nuts to the specified torque in the numerical order.

Nozzle Holder Flange Nuts Torque	N·m (kg·m/lb·ft)
19 (1.9/14)	

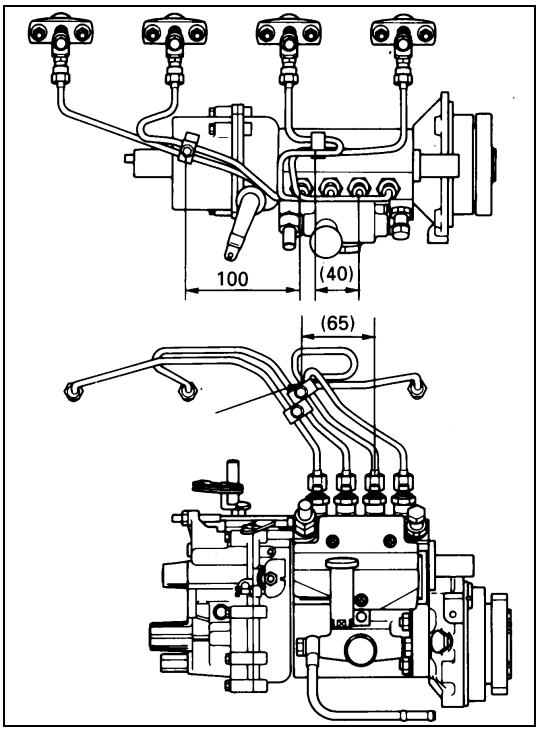

6C-30-3.tif

3. Fuel Injection Pipe

1) Install the injection pipe assembly and temporarily tighten the injection pipe sleeve nuts.
2) Set the clips in the prescribed position shown in the illustration.

CAUTION:

Make absolutely sure that the clip is correctly positioned.

An improperly positioned clip will result in injection pipe breakage and fuel pulsing noise.

Clip Screw Torque	N·m (kg·m/lb·in)
3 (0.3/26)	

3) Tighten the injection pipe sleeve nuts to the specified torque.

Injection Pipe Sleeve Nut Torque	N·m (kg·m/lb·ft)
29 (3/22)	

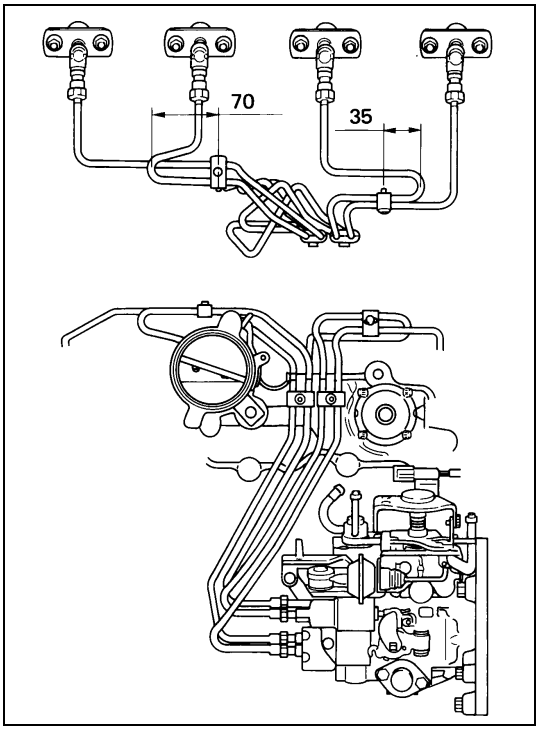

6C-31-1.tif

Fuel Injection Pipe (4HF1-2 model only)

1) Connect Injectin Pipe and fix with clips as illustrated.

Injection Pipe Tightening Torque	N·m (kg·m/lb·ft)
29 (3.0/22)	

Clip Tightening Torque	N·m (kg·m/lb·in)
3 (0.3/26)	

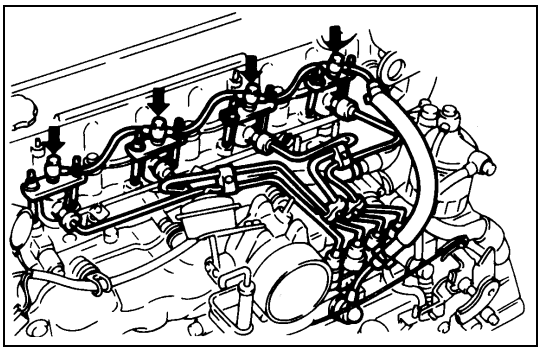

6C-31-2.tif

2. Leak Off Pipe

Leak-Off Pipe Joint Bolt Torque	N·m (kg·m/lb·in)
13 (1.3/113)	

1. Nozzle Cover

- Connect battery ground cable.

INJECTION PUMP ASSEMBLY (Except 4HF1-2 model)

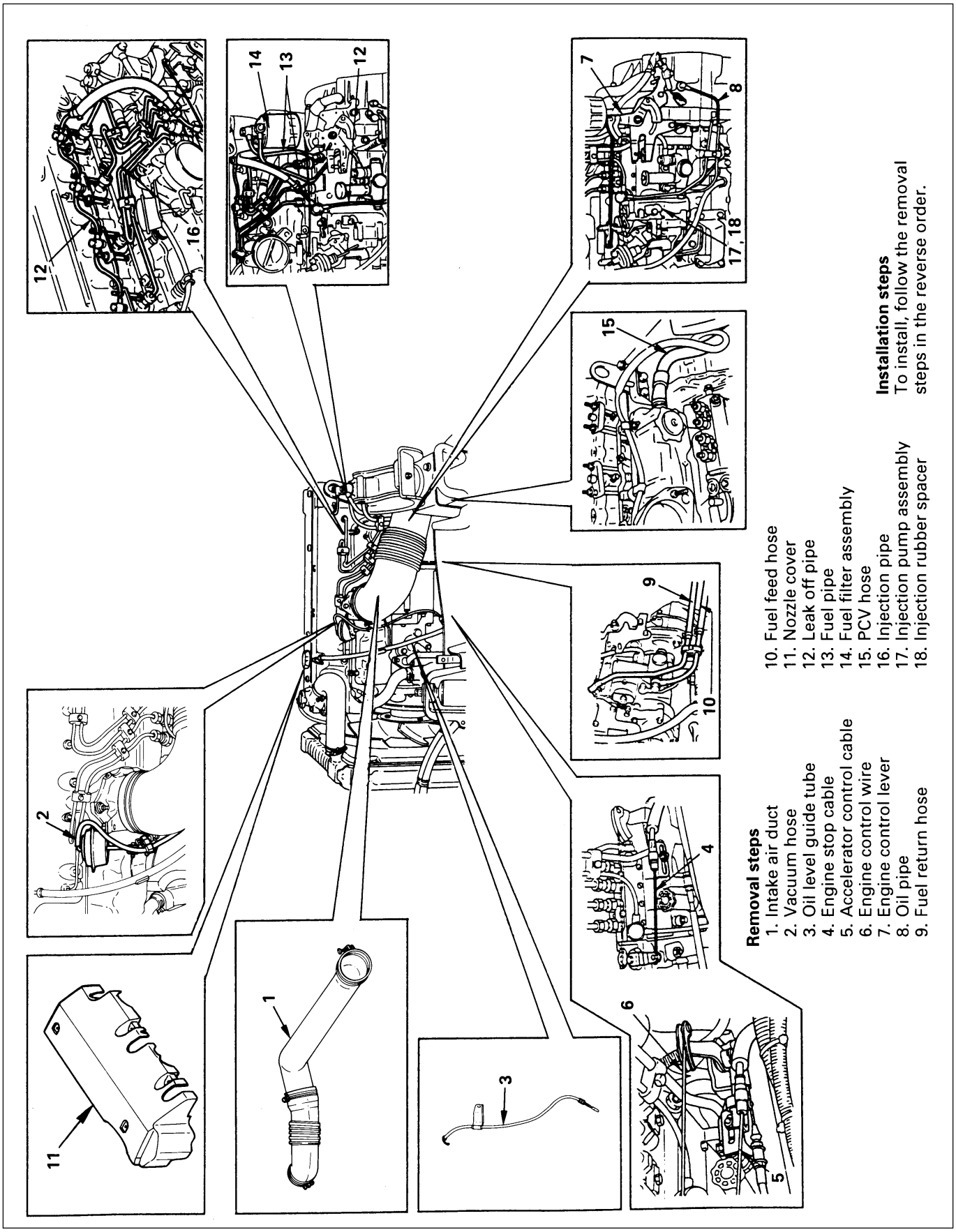

6C-32-1.tif

REMOVAL

Preparation

- Disconnect battery ground cable
- Drain coolant

1. Intake Air Duct

2. Vacuum Hose

3. Oil Level Guide Tube

- Remove the guide tube fixing bolt and pull out the guide tube.

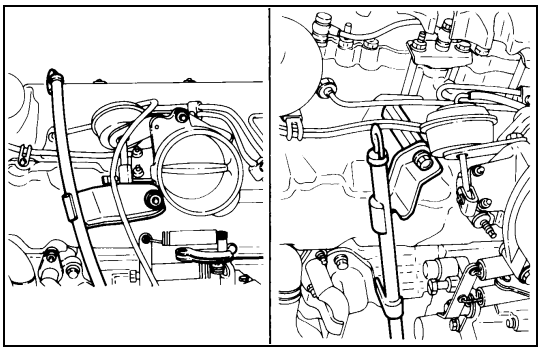

6C-33-1.tif

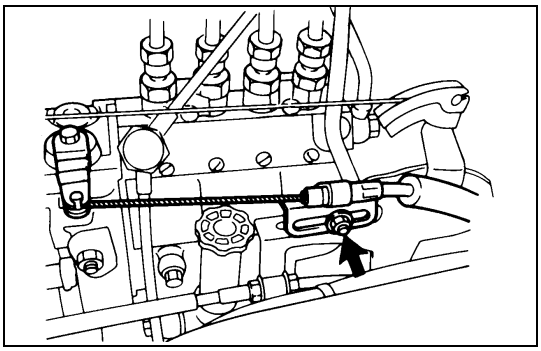

6C-33-2.tif

4. Engine Stop Cable

- Loosen locking nut at bracket and disconnect.
- Engine stop cable from injection pump stop lever.

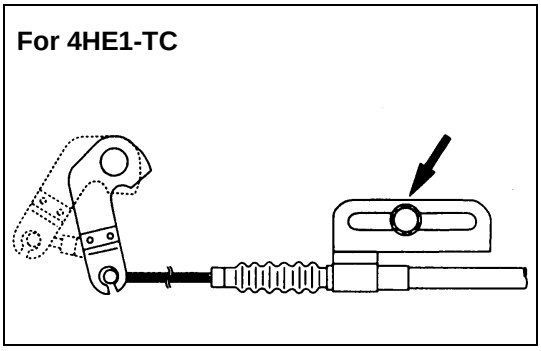

6C-33-3.tif

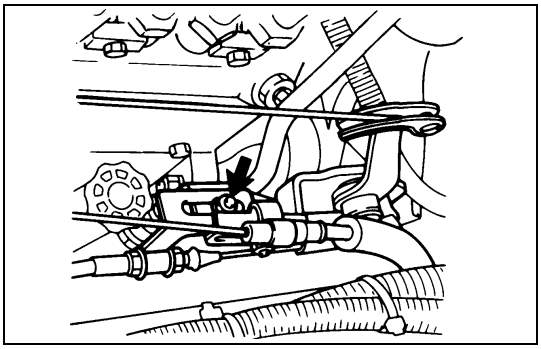

6C-33-4.tif

5. Accelerator Control Cable

- Loosen locking nut at bracket and disconnect accelerator control cable from injection pump control lever.

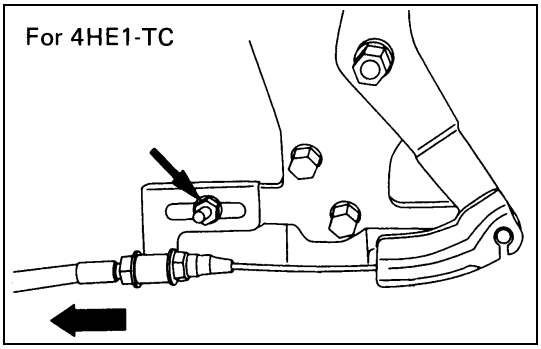

6C-34-1.tif

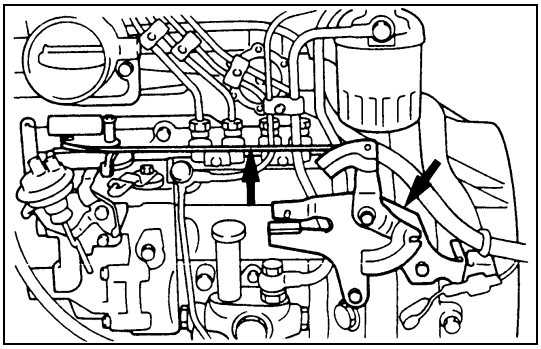

6C-34-2.tif

6. Engine Control Wire

7. Engine Control Lever

8. Oil Pipe

9. Fuel Return Hose

10. Fuel Feed Hose

- Disconnect fuel hose from injection pump side and take care not to spill and enter dust.

11 Nozzle Cover

12. Leak-Off Pipe

13. Fuel Pipe

14. Fuel Filter Assembly

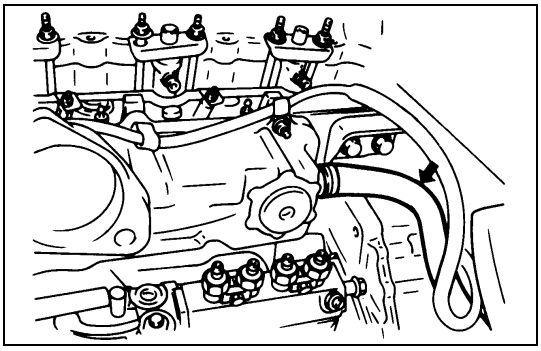

6C-34-3.tif

15. PCV Hose

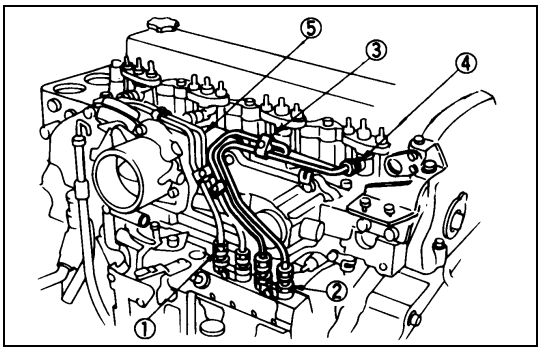

6C-34-4.tif

16. Injection Pipe

- Loosen the injection pipe sleeve nuts ①.
  Do not apply excessive force to the injection pipes ⑤.
- Loosen the injection pipes clips ③.
- Remove the injection pipe assembly.
  Plug the delivery valve holder ② ports and nozzle holder ④ ports with caps to prevent the entry of foreign material.

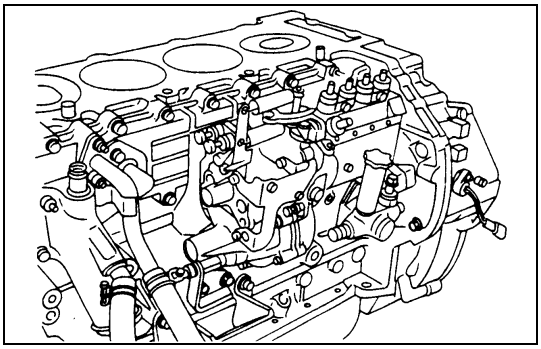

6C-35-1.tif

17. Injection Pump Assembly

1) Remove the injection pump bracket bolts and the injection pump rear bracket bolts.
2) Then remove the injection pump assembly.

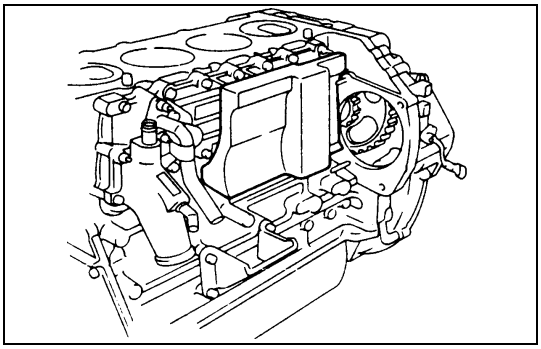

6C-35-2.tif

18. Injection Pump Rubber Spacer (For 4HF1/4HG1/4HE1-T)

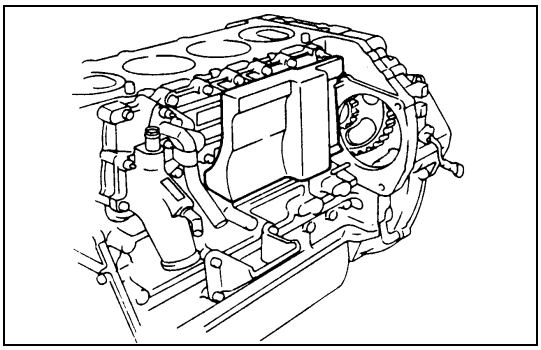

6C-35-3.tif

INSTALLATION

18. Injection Pump Rubber Spacer

Stick the rubber spacer to the location indicated in the illustration with pressure sensitive adhesive double coated tape. (4HF1/4HG1/4HE1-T Engine)

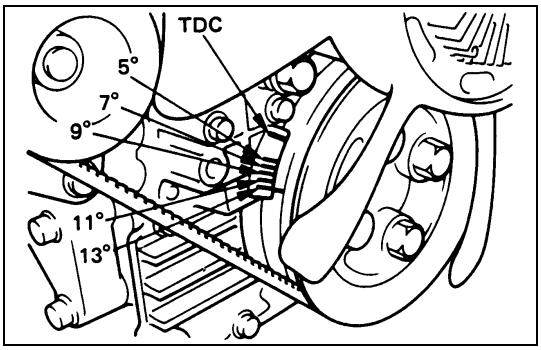

6C-35-4.tif

17. Injection Pump Assembly

1) Turn the crankshaft until the timing mark on the crankshaft damper pulley is aligned with “13°” line.
2) Check the No.1 cylinder intake and exhaust valve rocker arms for any play.

   If the No.1 cylinder intake and exhaust valve rocker arms are depressed the No.4 piston is at on the compression stroke.

   Rotate the crankshaft one full turn (360 degrees) and realign the crankshaft damper pulley timing mark with the “13°” line.

NOTE:

BTDC 13° to be aligned with here is an angle at which the injection pump is installed, and has nothing to do with the injection timing.

- Remove the inspection hole plug from the cylinder body.
- Install the O-ring to the injection pump bracket.

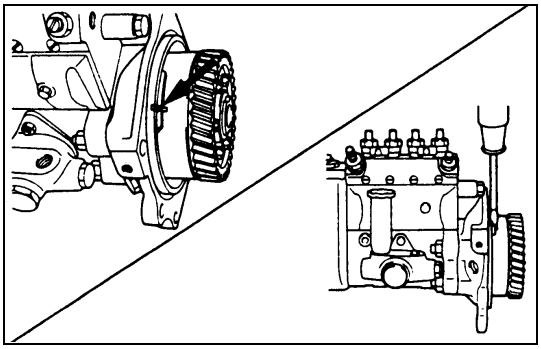

6C-36-1.tif

3) Align the injection pump bracket slit with the timer slit.
4) Install the injection pump assembly to the cylinder body.

NOTE:

When the injection pump has a poor gear engagement while installing the assembly to the cylinder body, insert a screwdriver into the slit on the time peripheral with the pump bracket slit used as a guide, and move it up and down to get it into forcibly.

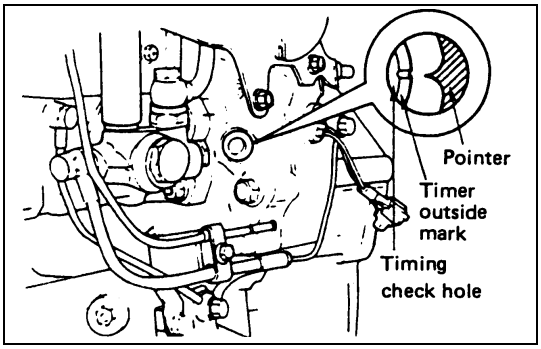

6C-36-2.tif

5) After installing the injection pump, the injection timing can be checked through the timing check hole provided at the injection pump bracket.
   Set the No.1 cylinder to the BTDC (injection timing of engine mode) on the compression stroke. When the pointer of the timing check hole comes in line with the mark on the timer periphery of the injection pump as shown in the illustration, the injection timing is normal.
   After completion of the injection timing check, tighten the check hole plug to the specified torque.

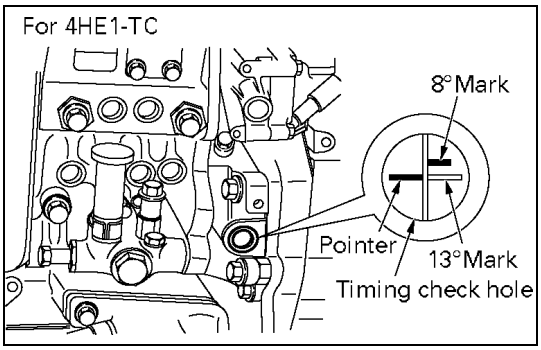

140RW080.tif

Injection Timing	deg
4HF1: 4HE1-TC	BTDC 8
4HG1	BTDC 9
4HG1-T	BTDC 7 (Except Colombia) BTDC 9 (For Colombia)
4HE1-T	BTDC 7

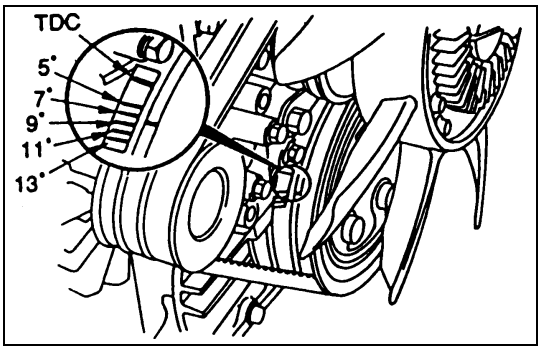

6C-36-4.tif

6) Turn the crankshaft until the timing mark on the crankshaft damper pulley is aligned with “8°” line

NOTE:

Position in its normal rotating direction. (for 4HE1-TC only)

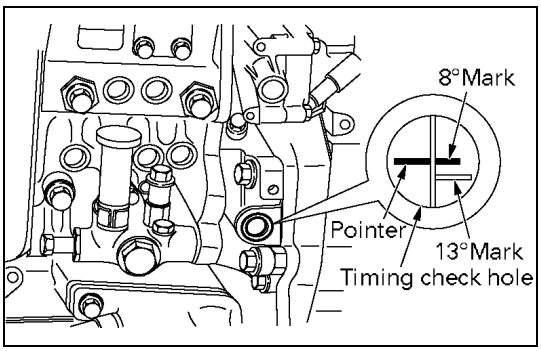

140RW079.tif

7) Adjust injection pump downward so that the “8°” comes to position in the timing check hole.
   (for 4HE1-TC only)

NOTE:

Whenever the injection pump is replaced, be sure to adjust the injection timing. For the details of the adjustment, refer to the “SECTION 00 SERVICING: INJECTION TIMING INSPECTION AND ADJUSTMENT”.

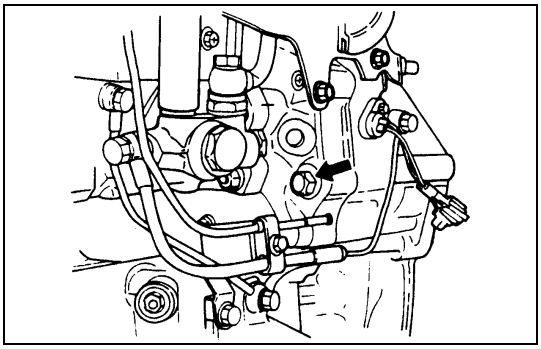

6C-37-1.tif

8) Tighten the injection pump bracket nuts and bolts to the specified torque.

Injection Pump Bracket Nut and Bolt Torque	N·m (kg·m/lb·ft)
48 (4.9/35)	

9) Install the injection pump rear bracket.

Injection Pump Rear Bracket Bolt Torque	N·m (kg·m/lb·ft)
48 (4.9/35)	

10) Install the inspection hole plug.

Inspection Hole Plug Torque	N·m (kg·m/lb·ft)
48 (4.9/35)	

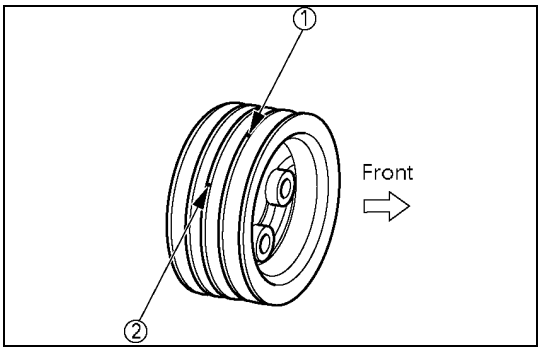

012RW133.tif

Note:

In case the crank pulley has two marks as illustrated, ① BTDC 49° mark on the second crest and ② TDC mark on the third crest (as viewed from the front side), be sure to set at the mark ②. (If there are two different marks on one and same crest, set at the mark which comes second when rotated in the normal direction.)

The mark ① is used when installing the injection pump for 4HF1-2.

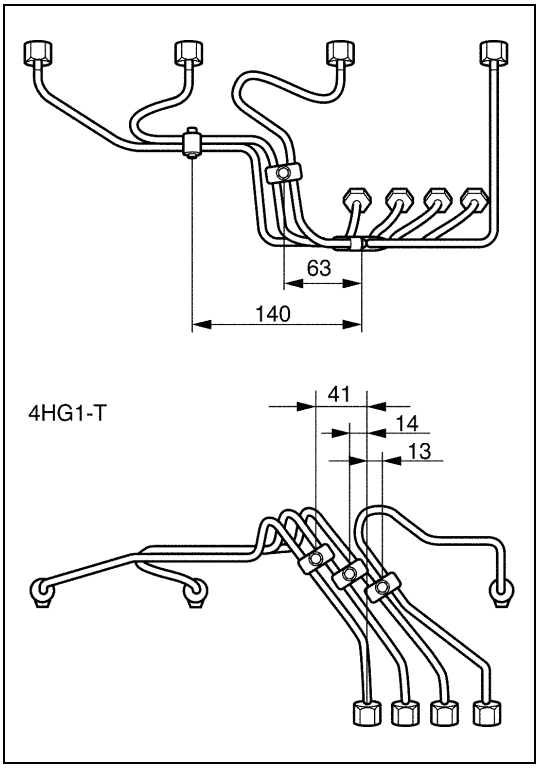

040LX020.tif

16. Fuel Injection Pipe

1) Install the injection pipe assembly and temporarily tighten the injection pipe sleeve nuts.
2) Set the clips in the prescribed position shown in the illustration.

CAUTION:

Make absolutely sure that the clip is correctly positioned.

An improperly positioned clip will result in injection pipe breakage and fuel pulsing noise.

Clip Screw Torque	N·m (kg·m/lb·in)
3 (0.3/26)	

3) Tighten the injection pipe sleeve nuts to the specified torque.

Injection Pipe Sleeve Nut Torque	N·m (kg·m/lb·ft)
29 (3/22)	

15. PCV Hose

14. Fuel Filter

Fuel Filter Bracket Bolt Torque	N·m (kg·m/lb·ft)
34 (3.5/25)	

INJECTION PUMP ASSEMBLY (4HF1-2 model only)

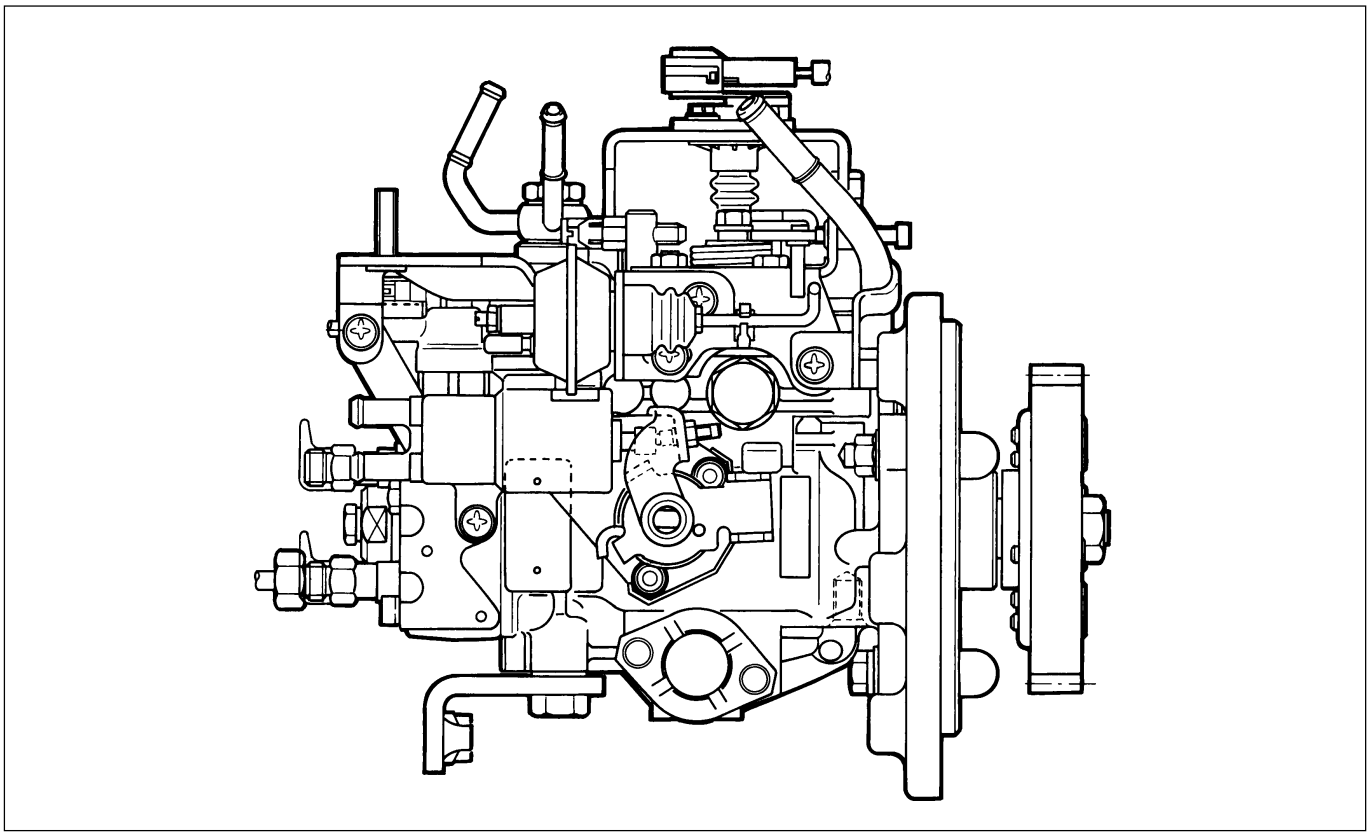

6C-38-1.tif

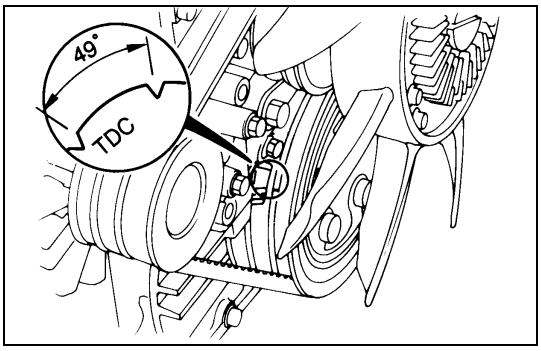

6C-38-2.tif

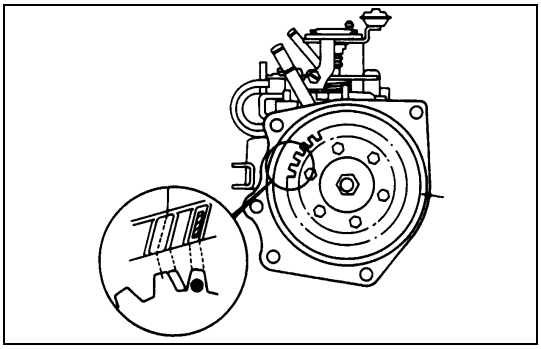

6C-38-3.tif

INSTALLATION

1) Turn the crankshaft to set No. 1 cylinder to 49° before TDC in its compression stroke.
   (49° is a pump assembling angle, not related to injection timing.)
2) Install O-ring to the injection pump.
3) Apply paint on the ● (Z) marked side of the injection pump gear.
4) Align the pump bracket mark with the tooth (under side of the pump) just before the ● (Z) marked tooth.
5) Insert the pump using the block side of stud bolt as a guide.

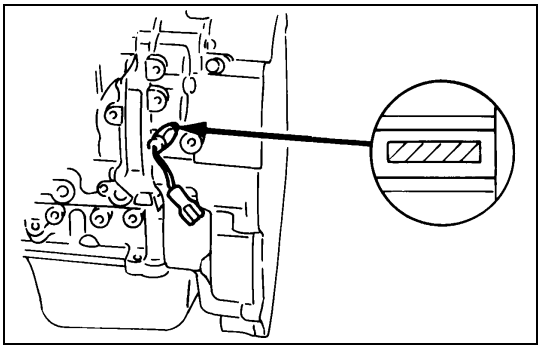

6C-39-1.tif

6) After installing the injection pump, remove the tachometer sensor from the housing, and make sure that the painted gear is at the center of the sensor mounting hole.
7) Tighten injectin pump clamping bolt and nut to specified torque:

Bolt Tightening Torque	N·m (kg·m/lb·ft)
48 (4.9/35)	

Nut Tightening Torque	N·m (kg·m/lb·ft)
24 (2.4/17)	

8) With reference to Injection Timing Check & Adjustment, set No. 1 Cylinder to 12° before its TDC.

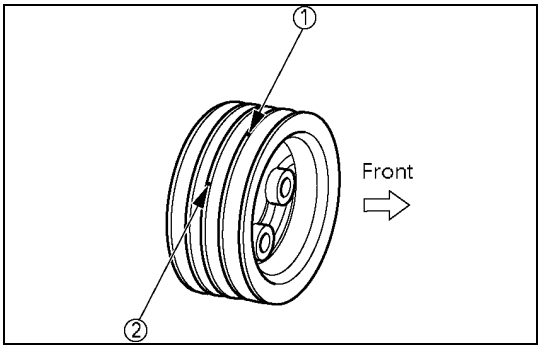

012RW133.tif

Note:
In case the crank pulley has two marks as illustrated, ① BTDC 49° mark on the second crest and TDC mark on the third crest (as viewed from the front side), be sure to set at the mark ②. (If there are two different marks on one and same crest, set at the mark which comes second when rotated in the normal direction.)

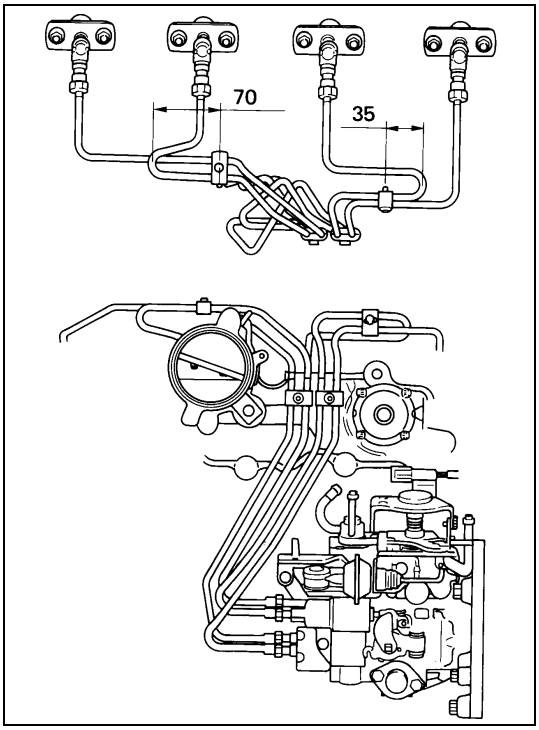

6C-39-3.tif

Injection Pipe (4HF1-2 model only)

1) Connect Injection Pipe and fix with clips as illustrated.

Injection Pipe Tightening Torque	N·m (kg·m/lb·ft)
29 (3.0/22)	

Clip Tightening Torque	N·m (kg·m/lb·in)
3 (0.3/26)	

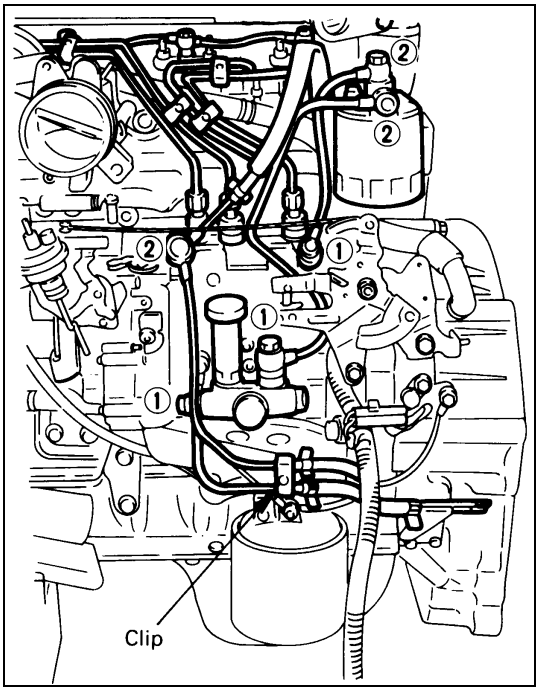

6C-40-1.tif

13. Fuel Pipe

Do not apply excessive force to the fuel pipe.

Fuel Pipe Joint Bolt ① Torque	N·m (kg·m/lb·ft)
41 (4.2/30)	

Fuel Pipe Joint Bolt ② Torque	N·m (kg·m/lb·ft)
23 (2.3/17)	

Clip Screw Torque	N·m (kg·m/lb·in)
4 (0.4/35)	

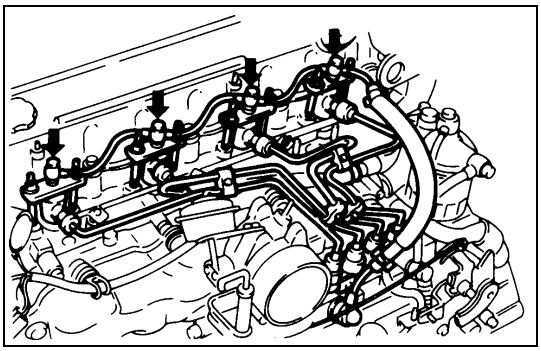

6C-40-2.tif

12. Leak Off Pipe

Leak-Off Pipe Joint Bolt Torque	N·m (kg·m/lb·in)
13 (1.3/113)	

11. Nozzle Cover

10. Fuel Feed Hose

9. Fuel Return Hose

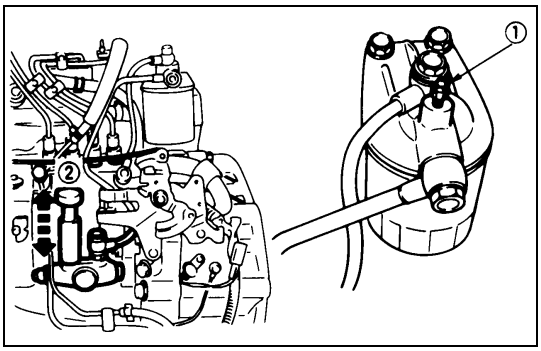

6C-40-3.tif

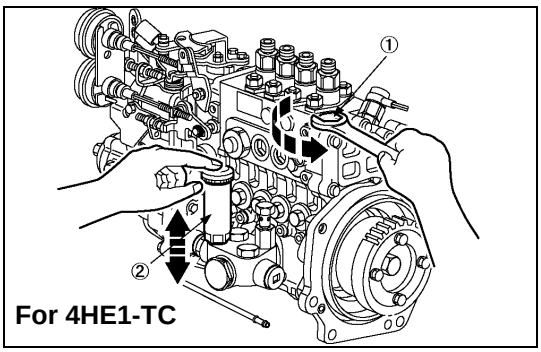

080LW001-1.tif

Air Bleeding

1) Loosen the priming pump cap ② at the side of the injection pump.
2) Loosen the bleeder valve ① at the top of the fuel filter.
3) Operate the priming pump to bleed the air from the injection pump.
4) Retighten the bleeder valve.
5) Operate the priming pump.
   Check for fuel leakage from around the injection pump and the fuel filter.
6) Lock the priming cap to the injection pump.

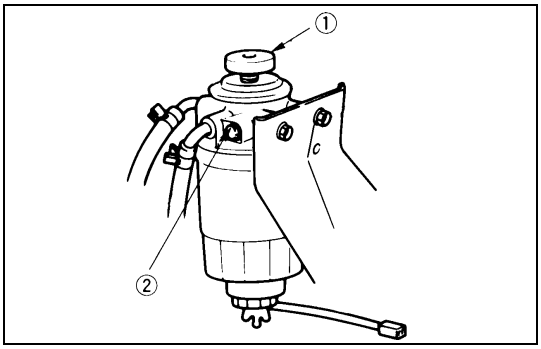

6C-41-1.tif

Air Bleeding (4HF1-2 model only)

1) Actuate the priming pump ① to send the air in the fuel system to the injection pump.
2) Loosen the sedimenter air bleeding plug ② and operate the priming pump until no bubbles appear.
3) Tighten the air bleeding plug completely.
4) Try to start the engine. If the engine is not started within 10 seconds, air bleeding should be conducted once again.
5) Check that there is not fuel leak, and then tighten the priming pump completely.

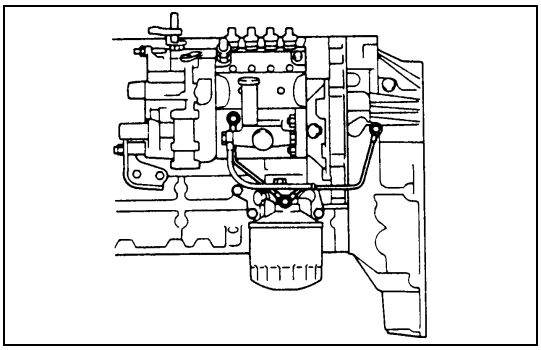

6C-41-2.tif

8. Oil Pipe

Oil Pipe Joint Bolt Torque	N·m (kg·m/lb·ft)
17 (1.7/12)	

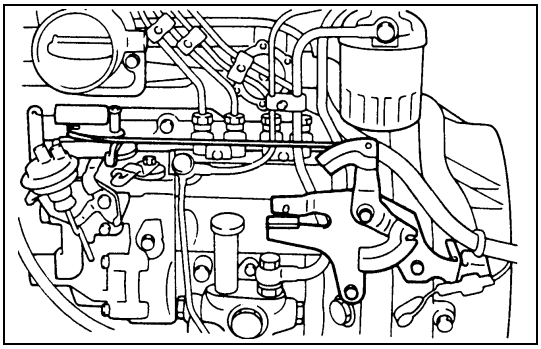

6C-41-3.tif

7. Engine Control Lever Assembly

Engine Control Lever Bolt Torque	N·m (kg·m/lb·ft)
24 (2.4/17)	

6. Engine Control Wire

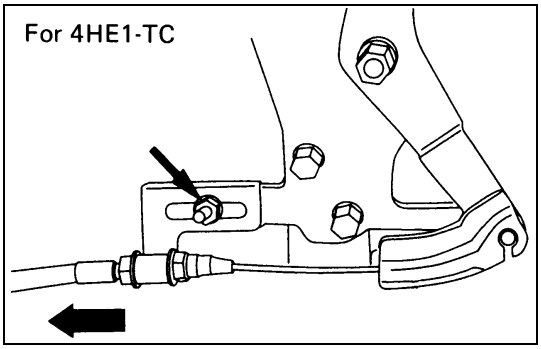

6C-41-4.tif

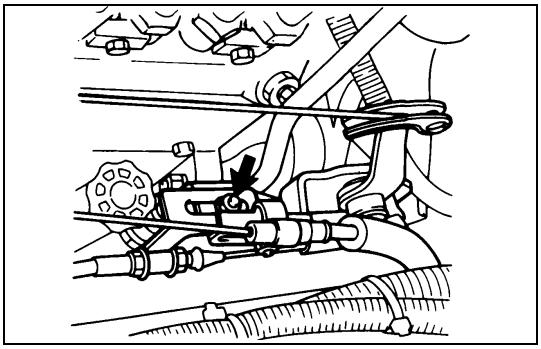

6C-42-1.tif

5. Accelerator Control Cable

1) Check to see if the idling control knob is turned to the extreme left.
2) Attach the tip end of the cable to the engine control lever.
3) Pull the outer cable toward the front side of the vehicle, and provide the engine control wire and the inner cable with an appropriate play before fastening the clamp with a nut.
4) Check to see if the injection pump control lever is at the idling position (with the lever in touch with the stopper bolt).

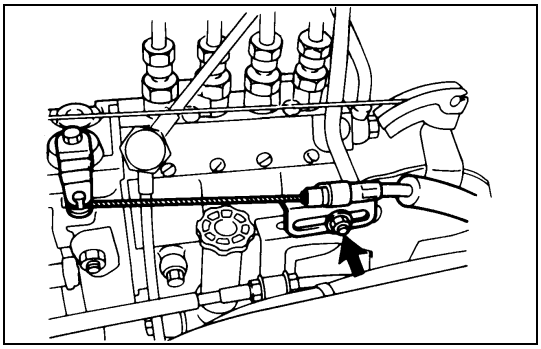

6C-42-2.tif

4. Engine Stop Cable

1) Attach the end tip of the cable to the engine stop lever.
2) Pull the cable toward the rear side of the vehicle, and fasten the clamp with a nut at the position where the lever stops.

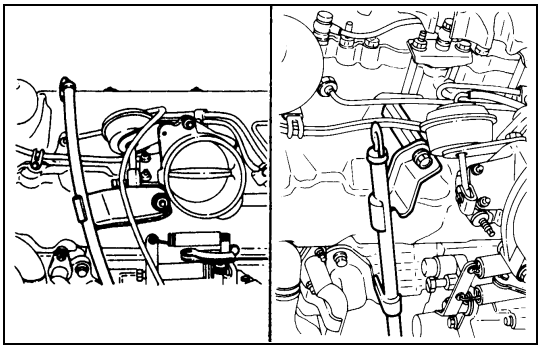

6C-42-3.tif

3. Oil Level Gauge Guide Tube

1) Install the O-rings to the guide tube lower portion and insert the guide tube completely to the cylinder body.
2) Tighten the guide tube bolt to the specified torque.

Guide Tube Bolt Torque	N·m (kg·m/lb·in)
	13 (1.3/113)

2. Vacuum Hose

1. Intake Air Duct

- Pour coolant into radiator.
- Connect battery ground cable.
- Start engine and check for oil and fuel leakage carefully.

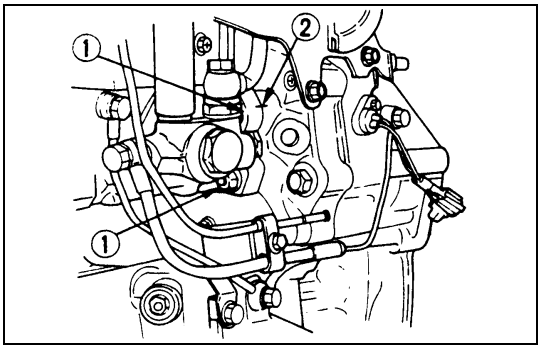

6C-43-1.tif

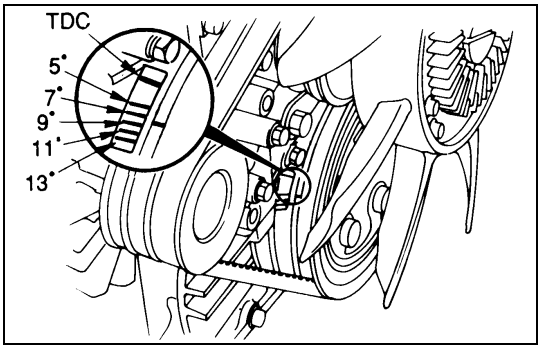

6C-43-2.tif

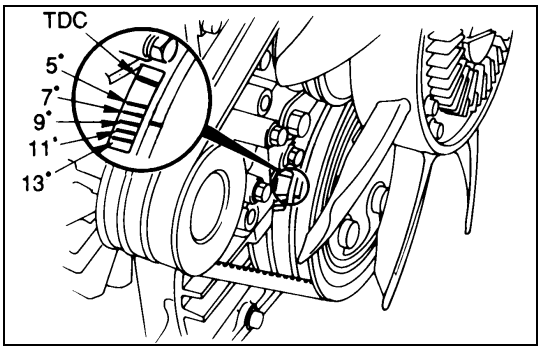

6C-43-3.tif

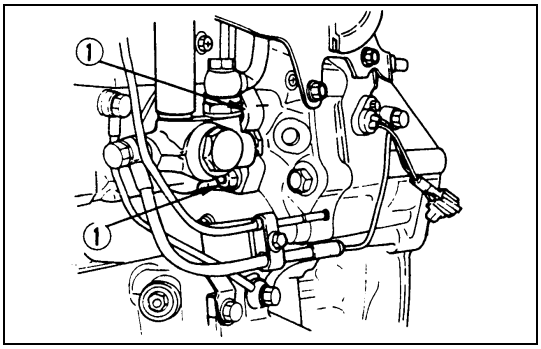

6C-43-4.tif

INJECTION TIMING ADJUSTMENT

Injection Pump Notched Line Inspection

1) Check the injection pump bracket nuts ① for looseness.
   Tighten as required.
2) Check that the notched lines ② on the injection pump bracket and the timing gear case are aligned.
   If the notched lines are not aligned, the injection timing must be checked.
3) Same time, check injection timing on the crank damper pulley. If the injection timing aligned with incorrect, the injection timing must be readjusted.

Injection Timing Adjustment (Except 4HF1-2 model)

1) Turn the crankshaft until the timing mark on the crankshaft damper pulley is aligned with the injection timing of each engine mode mark in the illustration.

Injection Timing	deg
4HF1 : 4HE1-TC	BTDC 8
4HG1	BTDC 9
4HG1-T : 4HE1-T	BTDC 7

2) Remove the two foam rubbers.
3) Loosen the four injection pump fixing nuts ①.
   This will allow the pump to pivot.
   Do not bend or scratch the fuel pipe.
4) Aligne the notched line between the injection pump bracket and the timing gear case.
   Make sure that the timing mark on the crank damper pulley is aligned with correct injection timing.

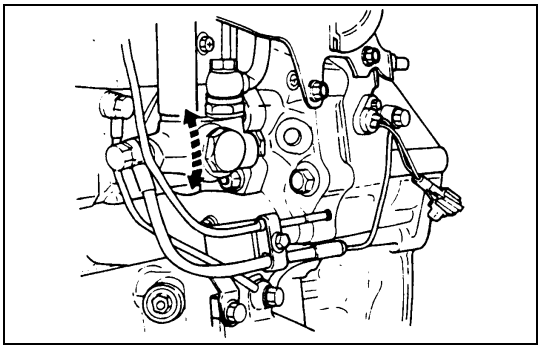

6C-44-1.tif

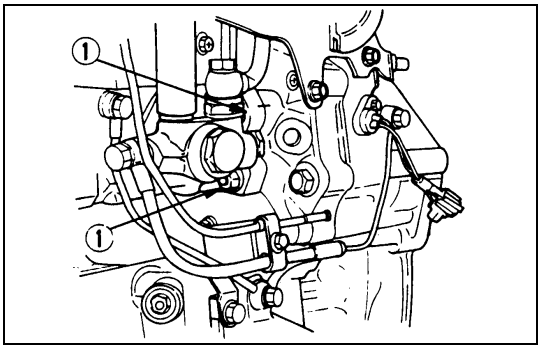

6C-44-2.tif

5) Tighten the injection pump fixing nuts ① to the specified torque.

Injection Pump Fixing Nut Torque	N·m (kg·m/lb·ft)
25 (2.6/19)	

Note:

If there are two marks on the crank pulley, the front side of mark is for setting BTDC 49° and the rear side of mark is for setting TDC.

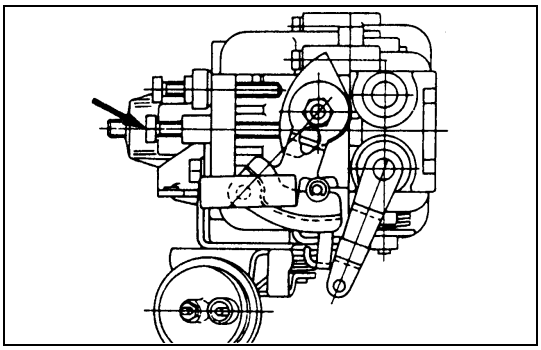

6C-44-3.tif

Idling Speed Adjustment (Except 4HF1-2 model)

1. Idling Rotation Check
   1) Idle the engine.
   2) Measure the number of the idling rotations with a tachometer.
   3) When the number of the idling rotations is outside the specified value, adjust it with the idling adjust bolt (arrow-marked).

   Number of idling rotations:

   550 to 600 rpm (at M/T standard)

   640 to 690 rpm (at A/T standard)

   (4HE1-TC)

   775 to 825 rpm (at M/T and A/T standard)

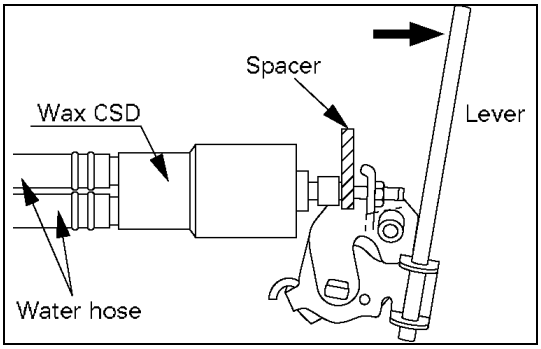

080LX001.tif

Injection Timing Check (4HF1-2 model only)

1) Set No. 1 Cylinder to the TDC in the compression stroke.
2) Disconnect Injection Pipe.
3) Put down Wax CSD lever, insert a spacer (10 ~ 12 mm/0.39 ~ 0.47 in) thick between the plunger and adjust bolt, and cancel the Wax CSD.

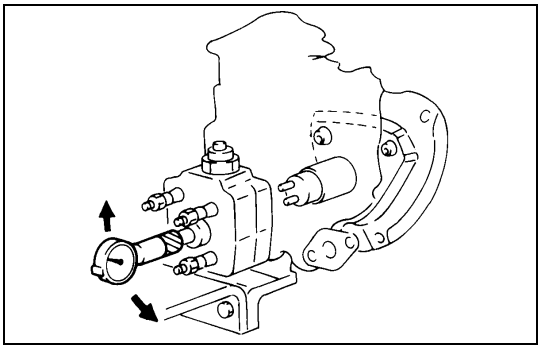

6C-45-2.tif

4) Remove the pump rear plug, connect a dial gage and set the lift at 1 mm (0.039 in).
   Special Tool
   Measuring device: 5-9940-0145-0

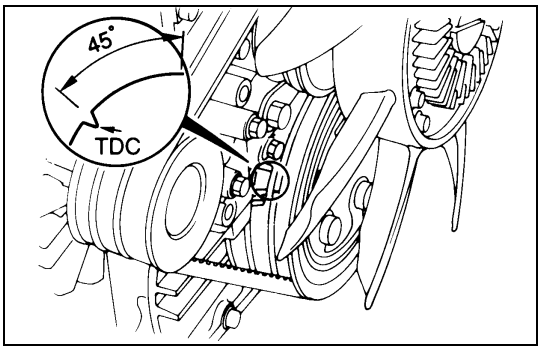

6C-45-3.tif

5) Set the crankshaft damper pulley TDC mark to the pointer or 45° before TDC.
6) Set the dial gage to the “0” position.
7) Turn the crankshaft leftwise and rightwise a little and make sure that the needle stays in the “0” position.

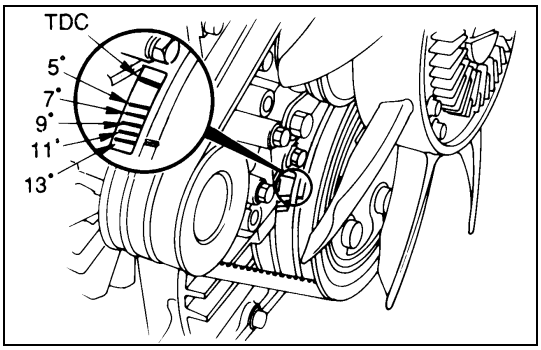

6C-45-4.tif

8) Turn the crankshaft in the normal direction and read the measuring device’s indication at the 12° before TDC position.

NOTE:

As there is no 12° mark, set midway between the 11° and 13° marks.

Standard value: 0.5 mm (0.0197 in)

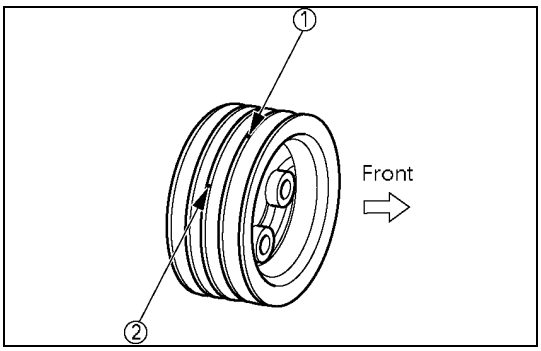

012RW133.tif

Note:

In case the crank pulley has two marks as illustrated, ① BTDC 49° mark on the second crest and ② TDC mark on the third crest (as viewed from the front side), be sure to set at the mark ②. (If there are two different marks on one and same crest, set at the mark which comes second when rotated in the normal direction.)

The mark ① is used when installing the injection pump for 4HF1-2.

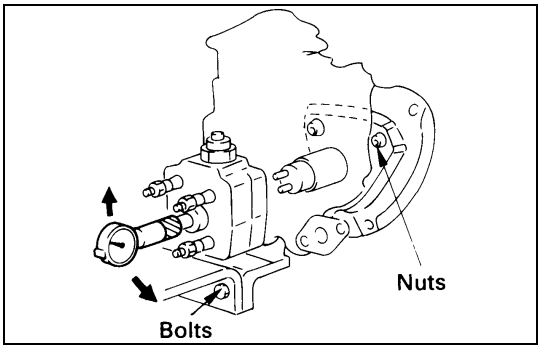

6C-46-1.tif

Injection Timing Adjustment (4HF1-2 model only)

If injection timing is out of the specified range, follow the following procedure for adjustment:

1) Loosen injection pump fixing nuts and bracket bolt.
2) Adjust the mounting angle of injection pump:
- If injection timing is too fast, bring the injection pump closer to the engine.
- If injection timing is too slow, put the injection pump more distant from the engine.
3) When the dial gage has indicated the specified value, tighten the fixing nuts and bolt to specified torque.

Nut Tightening Torque	N·m (kg·m/lb·ft)
24 (2.4/17)	

Bolt Tightening Torque	N·m (kg·m/lb·ft)
48 (4.9/35)	

4) Disconnect the dial gage, install and tighten the plug to specified torque. (Make sure of a coper washer being attached to the plug)

Plug Tightenng Torque	N·m (kg·m/lb·ft)
17 (1.7/12)	

5) Release the wax CSD and connect the injection pipe.

Pipe Sleeve Nut Tightening Torque	N·m (kg·m/lb·ft)
29 (3.0/22)	

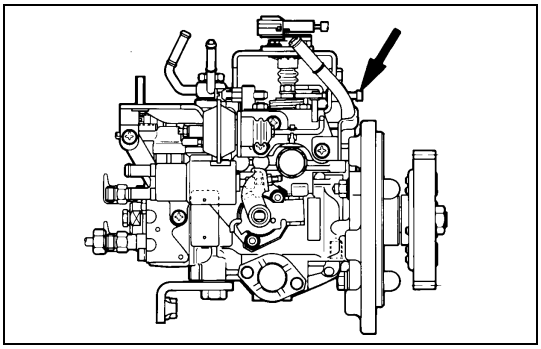

6C-46-2.tif

IDLING SPEED CHECK & ADJUSTMENT (4HF1-2 model only)

1) Warm up the engine.
2) Measure idling speed by means of tachometer.
3) If idling speed is out of the standard, adjust with an idling adjust bolt (indicated by and arrow mark).
   Idling speed: 575 - 625 rpm

INJECTION PUMP DATA

INJECTION VOLUME ADJUSTMENT

TEST CONDITIONS

4HF1 Engine

Item		Condition
Injection nozzle and holder assembly		ZEXEL Part No.: 105118-6050
Injection nozzle		ZEXEL Part No.: 105017-1860
Nozzle holder		ZEXEL Part No.: 105048-3673
Injection nozzle opening pressure	kg/cm^2 (psi/kPa)	185 (2,631/18,142)
Injection line dimensions		
Inside diameter	mm (in)	2.0 (0.079)
Outside diameter	mm (in)	6.0 (0.236)
Length	mm (in)	500 (19.7)
Fuel delivery pressure	kg/cm^2 (psi/kPa)	1.6 (22.75/156.9)
Test fuel		SAE Standard Test Diesel Fuel (SAE J967d) ISO Standard Test Diesel Fuel (ISO 4113)
Test fuel temperature	°C (°F)	40 - 45 (104 - 113)
Identification numbers		101401-7070 101401-7060 101401-7090 101401-7311

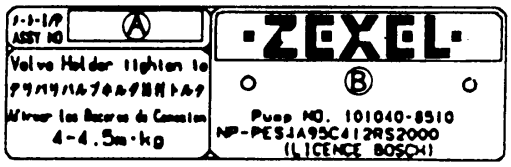

Ⓐ Isuzu Part No. (Pump Assembly No.)
Ⓑ ZEXEL Pump Assembly No.

6C-47-1.tif

IDENTIFICATION PLATE AND NUMBER

Use the data following the injection pump identification number to adjust the injection volume.

INJECTION VOLUME AND GOVERNOR PERFORMANCE DIAGRAM

Identification Numbers : 101401-7070/101401-7060
[4HF1 Engine]
Pre-stroke : No. 1 plunger 4.1 ± 0.05 mm
Injection order : 1 - 3 - 4 - 2 (interval 90° ± 30') Plungers are numbered from the Governor side
Tappet clearance : Bolt adjustment type : More than 0.3 mm for all cylinders.
: Shim adjustment type : Manually rotate the camshaft 2-3 times and confirm that it rotates smoothly.

Injection Volume

Adjusting point	Pump speed (r.p.m.)	Injection volume (cc/1000 strokes)	Variance (%)	Remarks
	960	61 ± 1.6	±4	Basic
H	285	16 ± 1.3	±10.0	
A	960	61 ± 1	-	Basic
B	1,600	(62) ± 2	-	
C	500	(60.5) ± 2	-	
I	150	(82) $^{+16}_{-0}$	-	

Timing Advance Specification

Pump Speed (r.p.m.)	1,050 or less	1,000	1,600 or more
Degree for Angle of Lead (deg.)	Start	0.5 or less	Finish 5 ± 0.5

Governor Adjustment

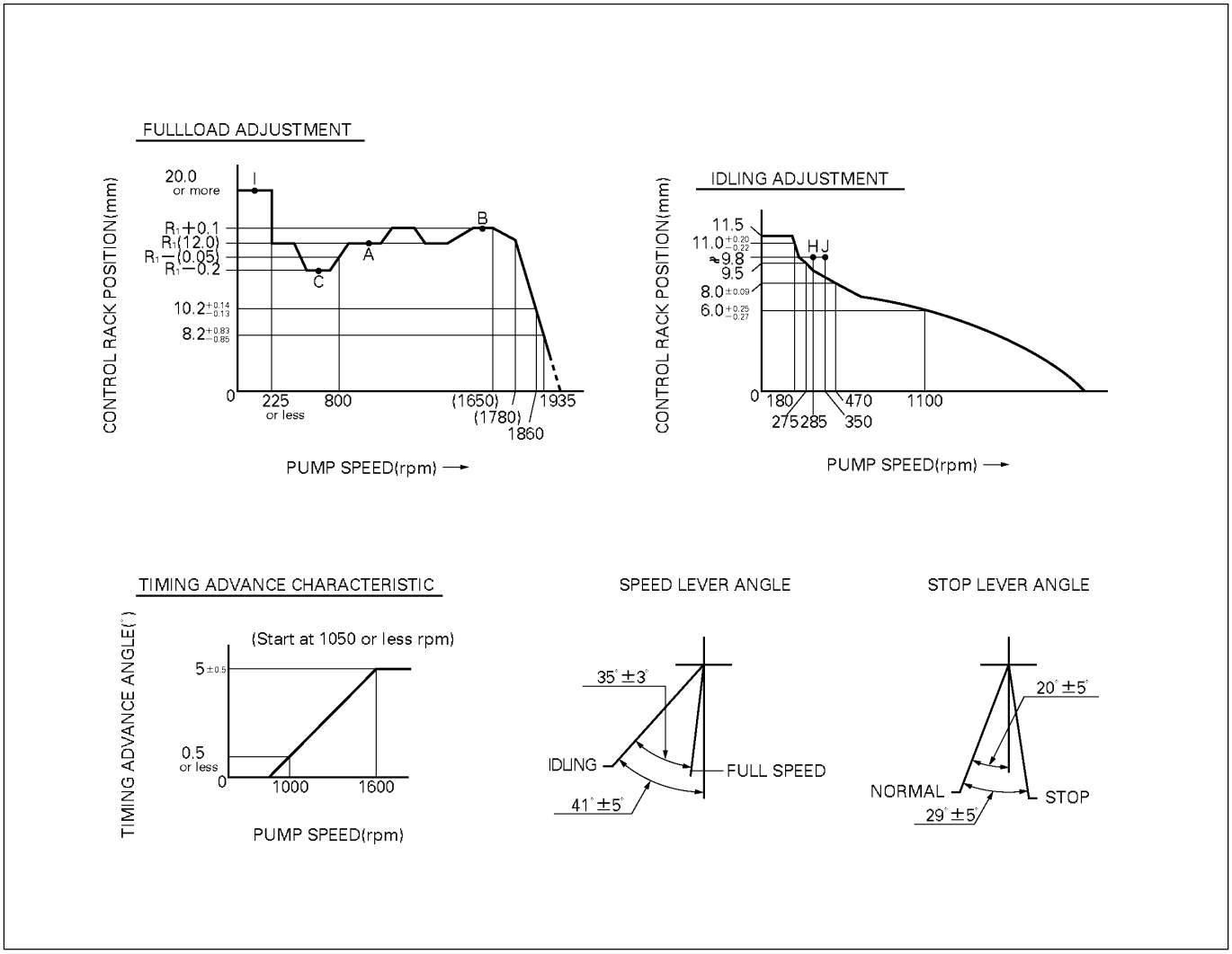

B06LT001-1.tif

INJECTION VOLUME AND GOVERNOR PERFORMANCE DIAGRAM

Identification Numbers : 101401-7090
[4HF1 Engine]
Pre-stroke : No. 1 plunger 4.1 ± 0.05 mm
Injection order : 1 - 3 - 4 - 2 (interval 90° ± 30') Plungers are numbered from the Governor side
Tappet clearance : Bolt adjustment type : More than 0.3 mm for all cylinders.
: Shim adjustment type : Manually rotate the camshaft 2-3 times and confirm that it rotates smoothly.

Injection Volume

Adjusting point	Pump speed (r.p.m.)	Injection volume (cc/1000 strokes)	Variance (%)	Remarks
	960	61 ± 1.6	±4	Basic
H	285	16 ± 1.3	±10.0	
A	960	61 ± 1	-	Basic
B	1,600	(62) ± 2	-	
C	500	(60.5) ± 2	-	
I	150	(82) $^{+16}_{-0}$	-	

Timing Advance Specification

Pump Speed (r.p.m.)	1,050 or less	1,000	1,600 or more
Degree for Angle of Lead (deg.)	Start	0.5 or less	Finish 5 ± 0.5

Governor Adjustment

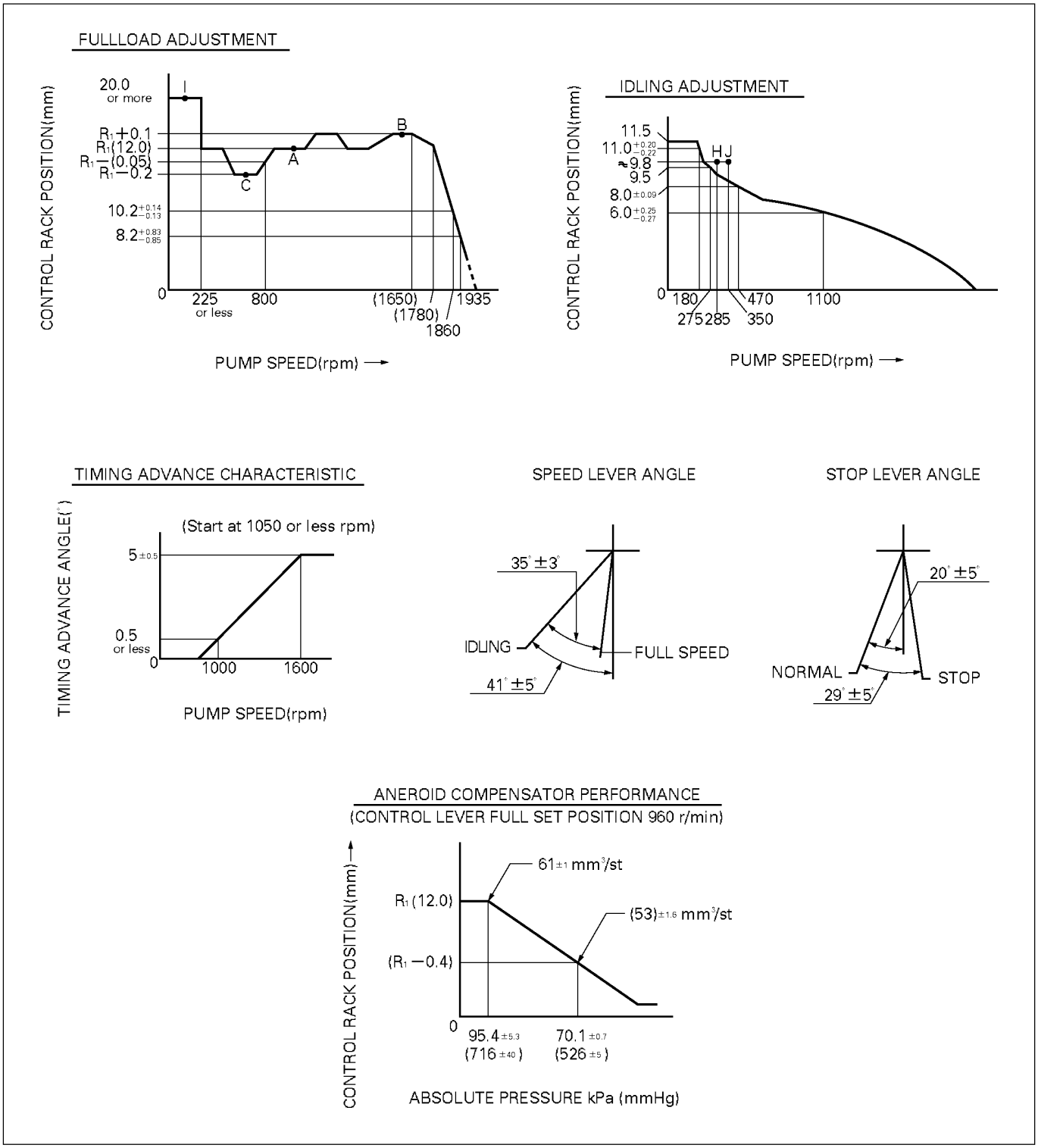

B06LT002-1.tif

INJECTION VOLUME AND GOVERNOR PERFORMANCE DIAGRAM

Identification Numbers : 101401-7311
[4HF1 Engine]
Pre-stroke : No. 1 plunger 4.1 ± 0.05 mm
Injection order : 1 - 3 - 4 - 2 (interval 90° ± 30') Plungers are numbered from the Governor side
Tappet clearance : Bolt adjustment type : More than 0.3 mm for all cylinders.
: Shim adjustment type : Manually rotate the camshaft 2-3 times and confirm that it rotates smoothly.

Injection Volume

Adjusting point	Pump speed (r.p.m.)	Injection volume (cc/1000 strokes)	Variance (%)	Remarks
	960	61 ± 1.6	±4	Basic
H	285	16 ± 1.3	±10.0	
A	960	65 ± 1	-	Basic
B	1,600	(62) ± 2	-	
C	500	(63.5) ± 2	-	
I	150	(82) $^{+16}_{-0}$	-	

Timing Advance Specification

Pump Speed (r.p.m.)	1,000	1,600 or more
Degree for Angle of Lead (deg.)	0.5 or less	Finish 5 ± 0.5

Governor Adjustment

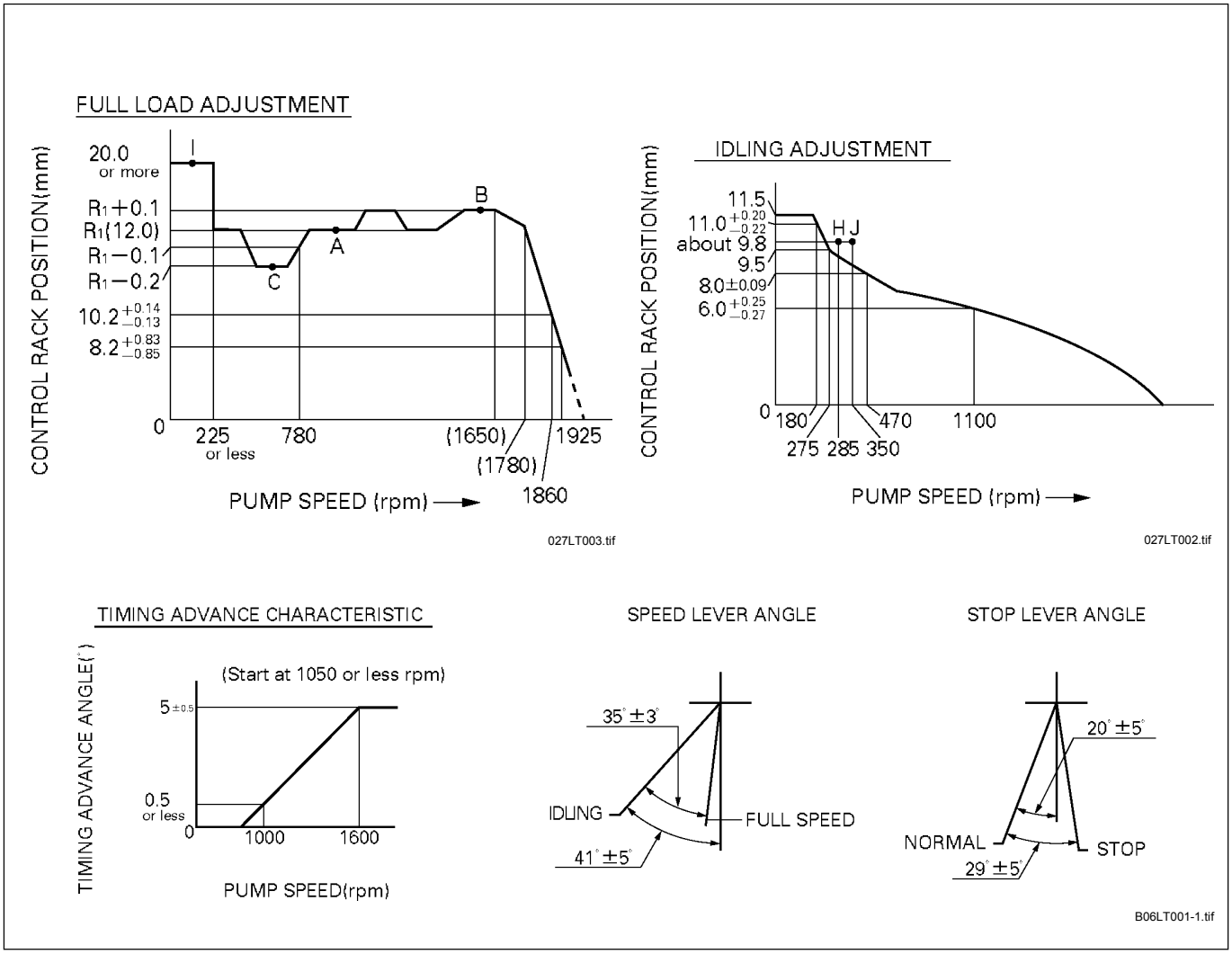

INJECTION VOLUME ADJUSTMENT

TEST CONDITIONS

4HF1-2 (Bosch distributor type)

Item		Condition
Injection nozzle and holder assembly		ZEXEL Part No.: -
Injection nozzle		ZEXEL Part No.: 105780-0060
Nozzle holder		ZEXEL Part No.: 105780-2150
Injection nozzle opening pressure	kg/cm^2 (psi/kPa)	133 (1,891 / 1,304)
Injection line dimensions		
Inside diameter	mm (in)	2.0 (0.079)
Outside diameter	mm (in)	6.0 (0.236)
Length	mm (in)	450 (17.7)
Fuel delivery pressure	kg/cm^2 (psi/kPa)	0.2 (2.84/19.6)
Test fuel		SAE Standard Test Diesel Fuel (SAE J967d) ISO Standard Test Diesel Fuel (ISO 4113)
Test fuel temperature	°C (°F)	40 - 45 (104 - 113)
Identification numbers		104742-1630

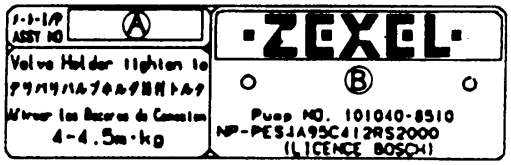

Ⓐ Isuzu Part No. (Pump Assembly No.)
Ⓑ ZEXEL Pump Assembly No.

6C-54-1.tif

IDENTIFICATION PLATE AND NUMBER

Use the data following the injection pump identification number to adjust the injection volume.

INJECTION VOLUME AND GOVERNOR PERFORMANCE DIAGRAM

Identification Numbers : 104742-1630
[4HF1-2 Engine]
Pre-stroke : No. 1 plunger 0.45 ± 0.05 mm
Injection order : 1 - 3 - 4 - 2 (interval 90° ± 30') Plungers are numbered from the Governor side

Injection Volume

Pump speed (r.p.m.)	Injection volume (mm^3/strokes)	Uneven amplitude (mm^3/strokes)	Oil temperature (°C)	Remarks
500	(48.2 ± 4.5)	-	48 ± 2	
960	60.3 ± 1.0	5.0	50 ± 2	Basic
1280	(63.9 ± 3.5)	-	50 ± 2	
1600	(61.4 ± 4.5)	-	50 ± 2	
1925	17.9 ± 3.0	5.5	50 ± 2	Basic
300	10.1 ± 2.0	2.0	48 ± 2	Basic
150	37.0 ± 10	-	48 ± 2	

Timing Advance Specification

Pump Speed (r.p.m.)	1,100	1,280	1,600	1,800
Degree for Angle of Lead (deg.)	0.7	2.8	6.2	Finish 6.5

Governor Adjustment (4HF1-2)

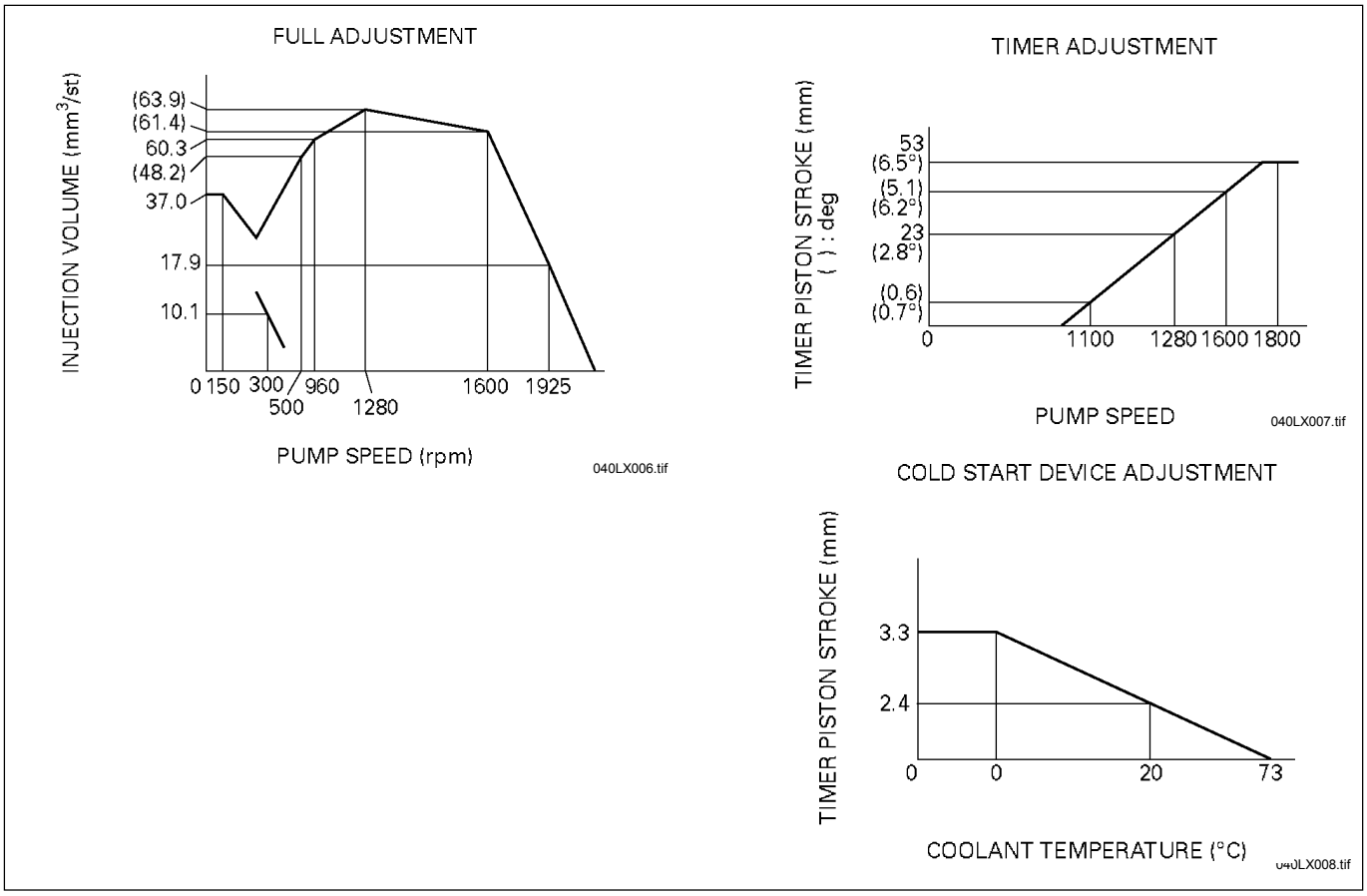

INJECTION VOLUME ADJUSTMENT

TEST CONDITIONS

4HG1 Engine

Item		Condition
Injection nozzle and holder assembly		ZEXEL Part No.: 105118-6041
Injection nozzle		ZEXEL Part No.: 105017-1850
Nozzle holder		ZEXEL Part No.: 105048-3673
Injection nozzle opening pressure	kg/cm^2 (psi/kPa)	185 (2,631/18,142)
Injection line dimensions		
Inside diameter	mm (in)	2.0 (0.079)
Outside diameter	mm (in)	6.0 (0.236)
Length	mm (in)	600 (23.6)
Fuel delivery pressure	kg/cm^2 (psi/kPa)	1.6 (22.75/156.9)
Test fuel		SAE Standard Test Diesel Fuel (SAE J967d) ISO Standard Test Diesel Fuel (ISO 4113)
Test fuel temperature	°C (°F)	40 - 45 (104 - 113)
Identification numbers		101401-7430 101401-7440

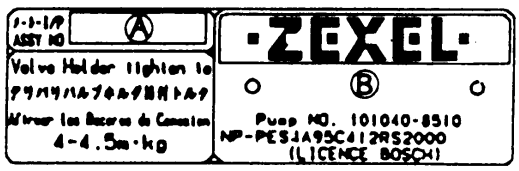

Ⓐ Isuzu Part No. (Pump Assembly No.)
Ⓑ ZEXEL Pump Assembly No.

6C-56-1.tif

IDENTIFICATION PLATE AND NUMBER

Use the data following the injection pump identification number to adjust the injection volume.

INJECTION VOLUME AND GOVERNOR PERFORMANCE DIAGRAM

Identification Numbers : 101401-7430
[4HG1 Engine] : 101401-7440
Pre-stroke : No. 1 plunger 4.1 ± 0.05 mm
Injection order : 1 - 3 - 4 - 2 (interval 90° ± 30') Plungers are numbered from the Governor side
Tappet clearance : Bolt adjustment type : More than 0.3 mm for all cylinders.
: Shim adjustment type : Manually rotate the camshaft 2-3 times and confirm that it rotates smoothly.

Injection Volume

Adjusting point	Pump speed (r.p.m.)	Injection volume (cc/1000 strokes)	Variance (%)	Remarks
	1,310	70.5 ± 1.6	±4	Basic
H	315	10 ± 1.3	±10.0	
A	1,310	70.5 ± 1	-	Basic
B	1,600	(75.5) ± 2	-	
C	520	(64) ± 2	-	
D	960	(70.5) $^{+2}_{-0}$	-	
I	150	(95) $^{+16}_{-0}$	-	

Timing Advance Specification

Pump Speed (r.p.m.)	1,050 or less	1,000	1,600 or more
Degree for Angle of Lead (deg.)	Start	0.5 or less	Finish 5 ± 0.5

Governor Adjustment

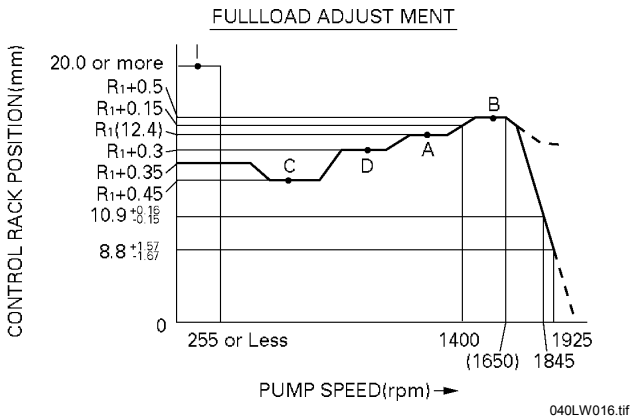

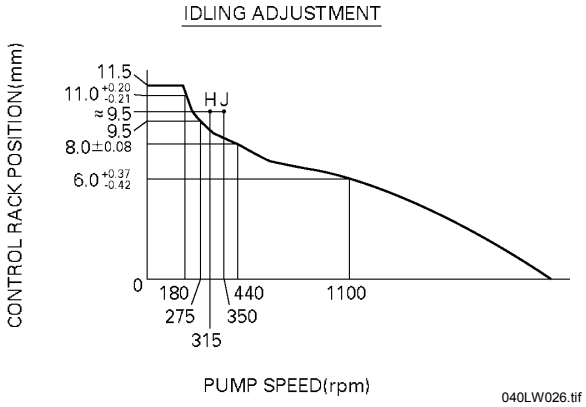

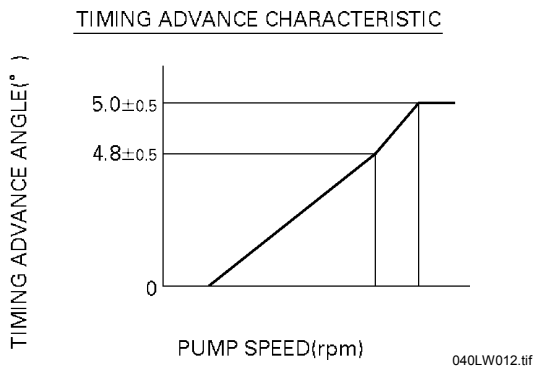

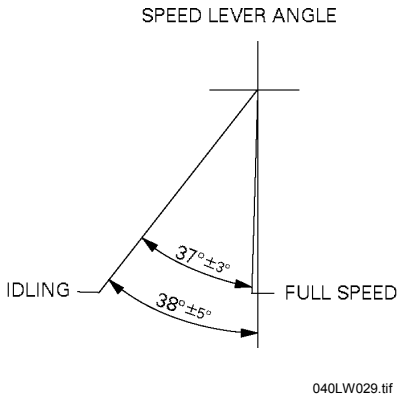

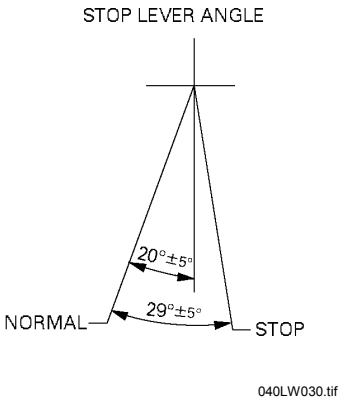

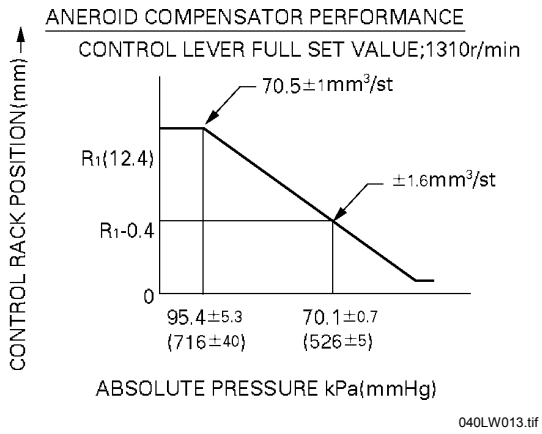

INJECTION VOLUME ADJUSTMENT

TEST CONDITIONS

4HG1-T

Item		Condition
Injection nozzle and holder assembly		ZEXEL Part No.: 105118-7541
Injection nozzle		ZEXEL Part No.: 105017-2650
Nozzle holder		ZEXEL Part No.: 105048-4280
Injection nozzle opening pressure	kg/cm^2 (psi/kPa)	184 (2,616/18,044)
Injection line dimensions		
Inside diameter	mm (in)	2.2 (0.086)
Outside diameter	mm (in)	6.0 (0.236)
Length	mm (in)	600 (23.6)
Fuel delivery pressure	kg/cm^2 (psi/kPa)	2.6 (36.97/254.9)
Test fuel		SAE Standard Test Diesel Fuel (SAE J967d) ISO Standard Test Diesel Fuel (ISO 4113)
Test fuel temperature	°C (°F)	40 - 45 (104 - 113)
Identification numbers		101401-7452

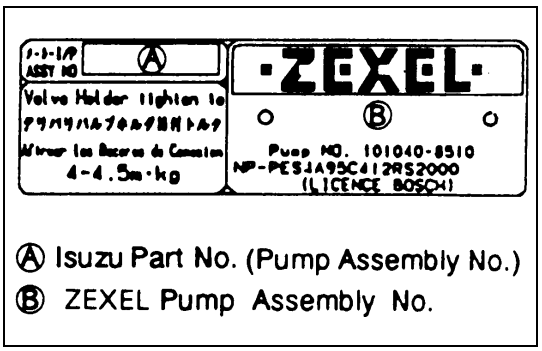

6C-59-1.tif

IDENTIFICATION PLATE AND NUMBER

Use the data following the injection pump identification number to adjust the injection volume.

INJECTION VOLUME AND GOVERNOR PERFORMANCE DIAGRAM

Identification Numbers : 101401-7452
[4HG1-T Engine]
Pre-stroke : No. 1 plunger 3.8 ± 0.05 mm
Injection order : 1 - 3 - 4 - 2 (interval 90° ± 30') Plungers are numbered from the Governor side
Tappet clearance : Shim adjustment type : Manually rotate the camshaft 2-3 times and confirm that it rotates smoothly.
: Bolt adjustment type : More than 0.3 mm for all cylinders.

Injection Volume

Adjusting point	Rack Position (mm)	Pump Speed (rpm)	Injection q'ty (cm^3/1000 strokes)	Max var bet. cyl. (%)	Fixed	Remarks
	11.5	1000	73.5 ± 1.6	±4	Rack	Basic
H	Approx. 8.9	315	(Measure) ± 1.3	±10	Rack	
A	R1 (11.5)	1000	73.5 ± 1	-	Lever	Basic Boost press. kPa (mmHg) Above 62.0 (Above 465)
B	R1 +1.0	1500	(78.5) ± 2	-	Lever	Boost press. kPa (mmHg) Above 62.0 (Above 465)
C	R2 –0.8	500	(66.5) ± 2	-	Lever	Boost press. 0
I	-	150	(Measure) ± 16	-	Lever	Boost press. 0
						Confirm that the timing of is advanced 1°±30' from A.

Timing Advance Specification

Pump speed (rpm)	Below (N1 + 50)	N1	N3				
Advance angle (°)	Start	Below 0.5	Finish 4.0 ± 0.5				

Governor Adjustment (4HG1-T)

FULL LOAD ADJUSTMENT

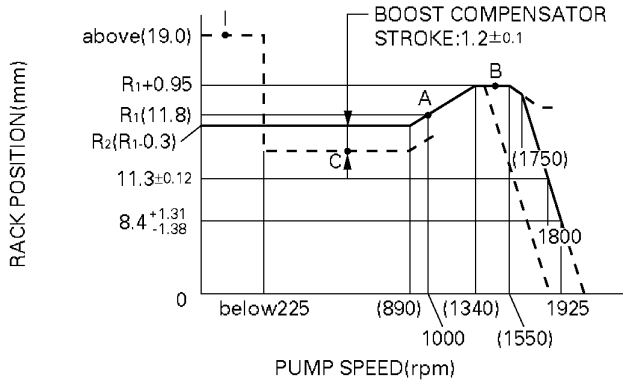

Confirm that Vist=2.97±0.28 at N=1500, R=R+0.95
at rack sensor voltage 5±0.01 V.

040LX011.tif

SPEED LEVER ANGLE

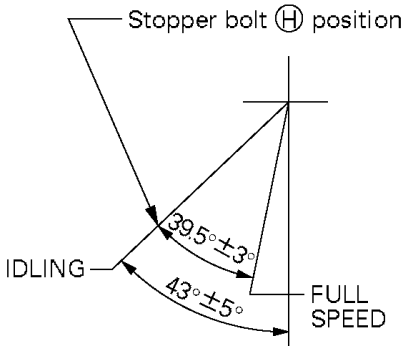

040LX014.tif

IDLING ADJUSTMENT

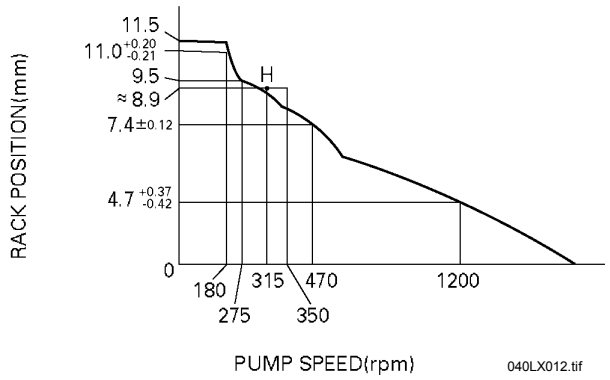

040LX012.tif

STOP LEVER ANGLE

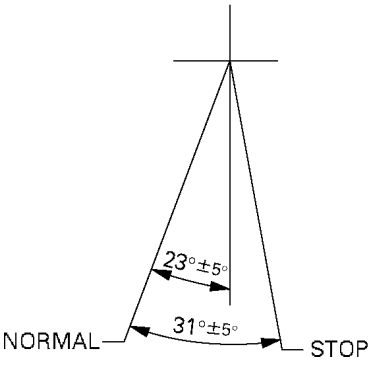

040LX015.tif

TIMING ADVANCE CHARACTERISTIC

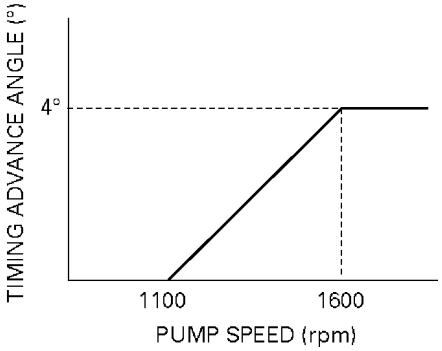

040LX003.tif

BOOST COMPENSATOR ADJUSTMENT

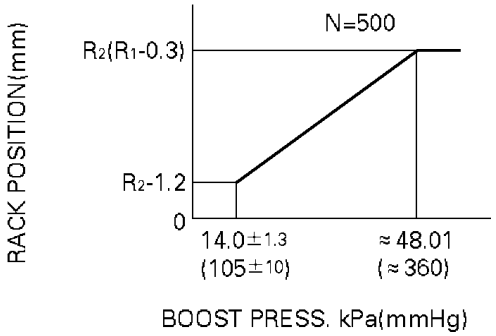

040LX013.tif

INJECTION VOLUME ADJUSTMENT

TEST CONDITIONS

4HE1-T

Item		Condition
Injection nozzle and holder assembly		ZEXEL Part No.: 105048-3831
Injection nozzle		ZEXEL Part No.: 105017-1840
Nozzle holder		ZEXEL Part No.: 105048-3831
Injection nozzle opening pressure	kg/cm^2 (psi/kPa)	185 (2,631/18,142)
Injection line dimensions		
Inside diameter	mm (in)	2.0 (0.079)
Outside diameter	mm (in)	6.0 (0.236)
Length	mm (in)	600 (23.6)
Fuel delivery pressure	kg/cm^2 (psi/kPa)	2.6 (36.97/254.9)
Test fuel		SAE Standard Test Diesel Fuel (SAE J967d) ISO Standard Test Diesel Fuel (ISO 4113)
Test fuel temperature	°C (°F)	40 - 45 (104 - 113)
Identification numbers		101401-7410 101401-7420 101401-7273

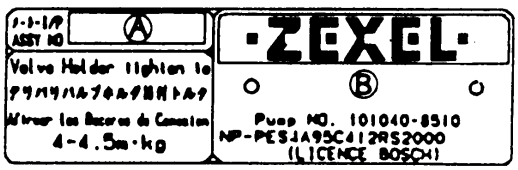

Ⓐ Isuzu Part No. (Pump Assembly No.)
Ⓑ ZEXEL Pump Assembly No.

6C-62-1.tif

IDENTIFICATION PLATE AND NUMBER

Use the data following the injection pump identification number to adjust the injection volume.

INJECTION VOLUME AND GOVERNOR PERFORMANCE DIAGRAM

Identification Numbers : 101401-7410/101401-7420/101401-7273
[4HE1-T Engine]
Pre-stroke : No. 1 plunger 3.8 ± 0.05 mm
Injection order : 1 - 3 - 4 - 2 (interval 90° ± 30') Plungers are numbered from the Governor side
Tappet clearance : Bolt adjustment type : More than 0.3 mm for all cylinders.
: Shim adjustment type : Manually rotate the camshaft 2-3 times and confirm that it rotates smoothly.

Injection Volume

Adjusting point	Pump speed (r.p.m.)	Injection volume (cc/1000 strokes)	Variance (%)	Remarks
	1,160	96.5 ± 1.6	±4	Basic
H	375	14.5 ± 1.3	±10.0	
Z	375	-	-	Basic
A	1,160	96.5 ± 1	-	
B	1,450	(97) ± 2	-	
C	700	(81) ± 2	-	
I	150	(100) $^{+18}_{-0}$	-	

Timing Advance Specification

Pump Speed (r.p.m.)	1,185 or less	1,135	1,450 or more
Degree for Angle of Lead (deg.)	Start	0.5 or less	Finish 4.8 ± 0.5

Governor Adjustment

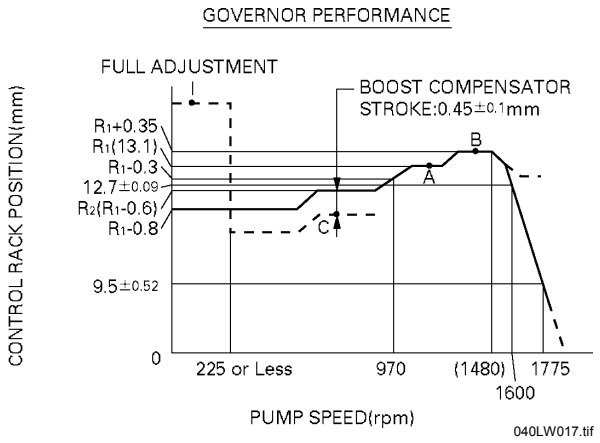

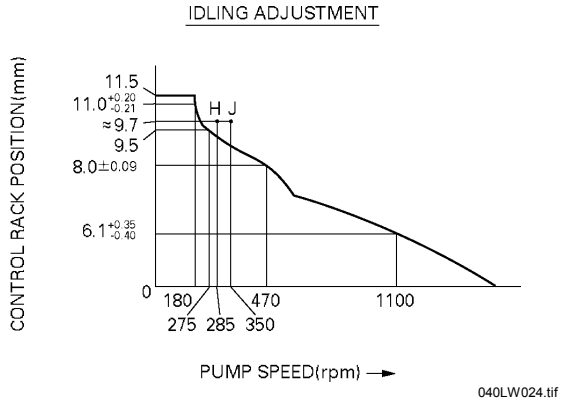

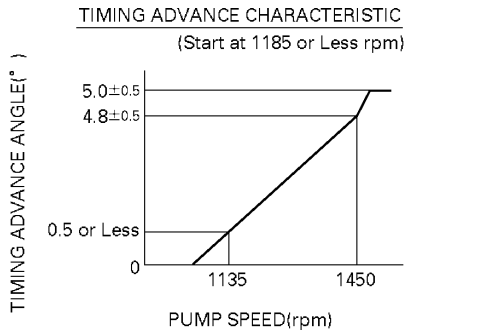

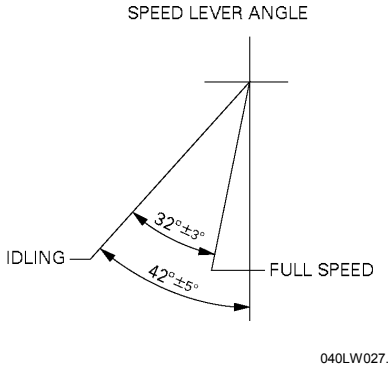

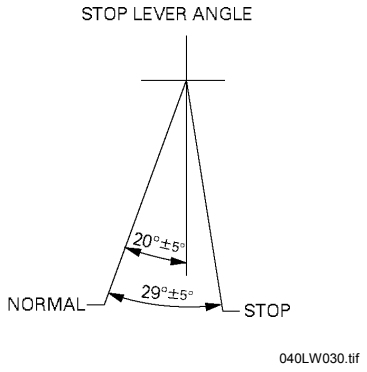

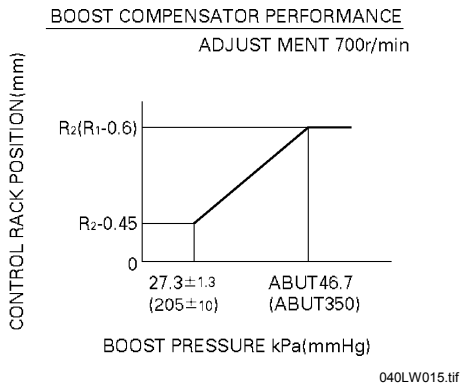

INJECTION VOLUME ADJUSTMENT

TEST CONDITIONS

4HE1-TC Engine

Item		Condition
Injection nozzle and holder assembly		ZEXEL Part No.: 105118-6460
Injection nozzle		ZEXEL Part No.: 105017-2180
Nozzle holder		ZEXEL Part No.: 105048-3673
Injection nozzle opening pressure	kg/cm^2 (psi/kPa)	185 (2,631/18,142)
Injection line dimensions		
Inside diameter	mm (in)	3.0 (0.118)
Outside diameter	mm (in)	8.0 (0.315)
Length	mm (in)	600 (23.6)
Fuel delivery pressure	kg/cm^2 (psi/kPa)	2.6 (36.97/254.9)
Test fuel		SAE Standard Test Diesel Fuel (SAE J967d) ISO Standard Test Diesel Fuel (ISO 4113)
Test fuel temperature	°C (°F)	40 - 45 (104 - 113)
Identification numbers		107492-1023 107492-1062 107492-1032 107492-1100 107492-1110 107492-1120 107492-1130 897212-9350 (ISUZU NO.)

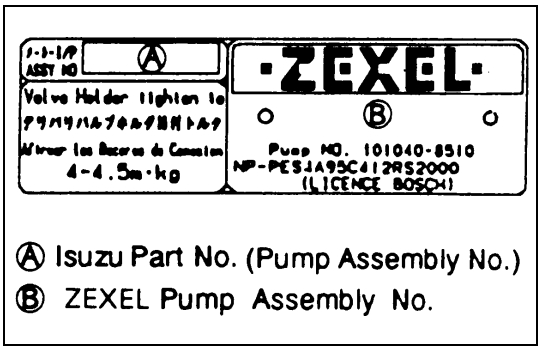

6C-65-1.tif

IDENTIFICATION PLATE AND NUMBER

Use the data following the injection pump identification number to adjust the injection volume.

INJECTION VOLUME AND GOVERNOR PERFORMANCE DIAGRAM

Identification Numbers : 107492-1110
[4HE1-TC Engine]
Pre-stroke : No. 1 plunger 4.0 ± 0.03 mm
Injection order : 1 - 3 - 4 - 2 (interval 90° ± 15') Plungers are numbered from the Governor side
Tappet clearance : Bolt adjustment type : More than 0.3 mm for all cylinders.
: Shim adjustment type : Manually rotate the camshaft 2-3 times and confirm that it rotates smoothly.

Injection Volume

Adjusting point	Pump speed (r.p.m.)	Injection volume (cc/1000 strokes)	Variance (%)	Remarks
	1000	82.5 ± 1.6	± 4	Basic
H	400	19 ± 1.5	± 14	
Z	500	-	-	
A	1000	82.5 ± 1	-	Basic
B	1,450	(92.5) ± 2	-	
C	500	(67)	-	
D	1,450	(89.5)	-	
I	150	(220)	-	

Governor Adjustment

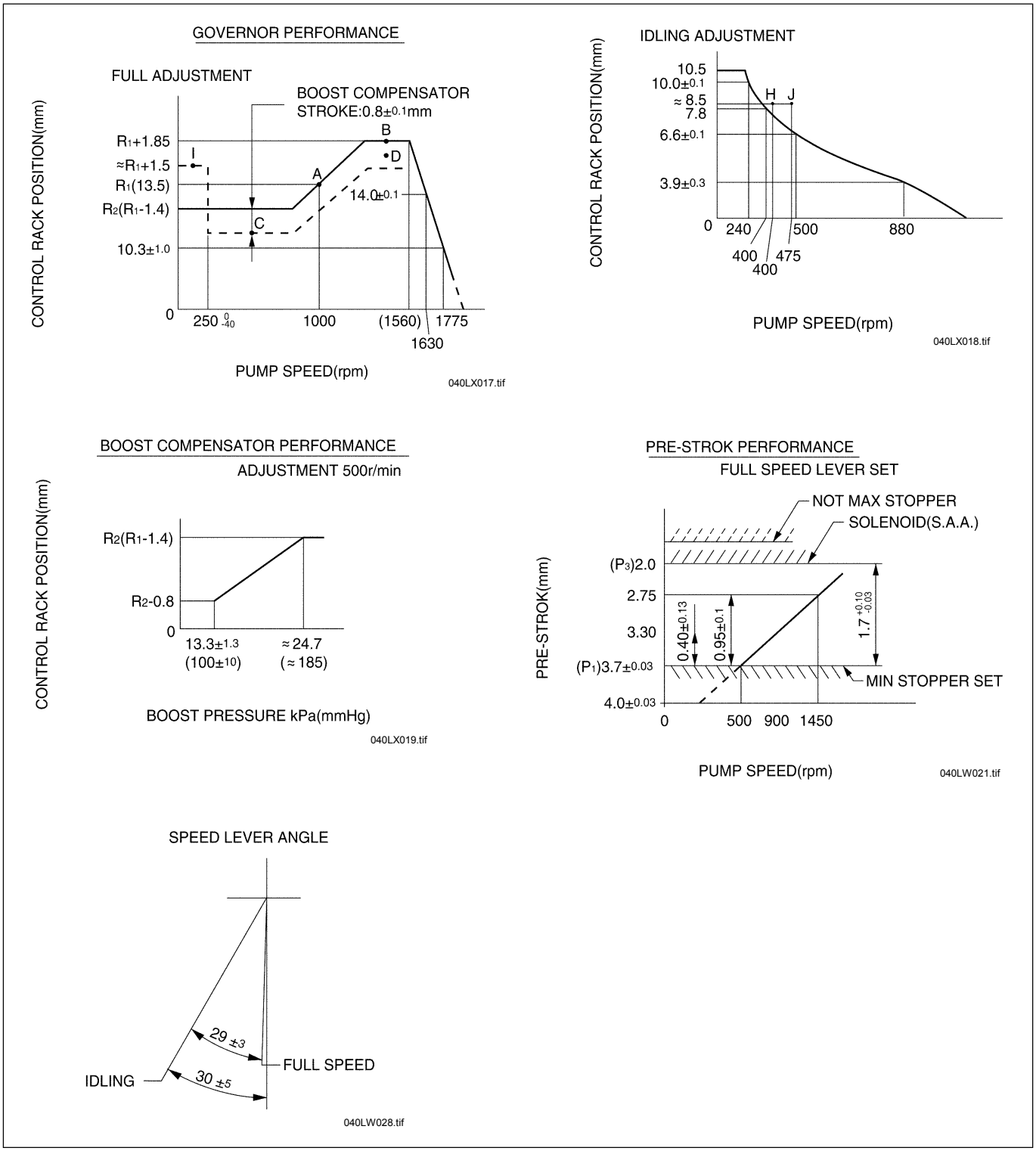

INJECTION VOLUME AND GOVERNOR PERFORMANCE DIAGRAM

Identification Numbers : 107492-1023 / 107492-1100
[4HE1-TC Engine]
Pre-stroke : No. 1 plunger 4.0 ± 0.03 mm
Injection order : 1 - 3 - 4 - 2 (interval 90° ± 15') Plungers are numbered from the Governor side
Tappet clearance : Bolt adjustment type : More than 0.3 mm for all cylinders.
: Shim adjustment type : Manually rotate the camshaft 2-3 times and confirm that it rotates smoothly.

Injection Volume

Adjusting point	Pump speed (r.p.m.)	Injection volume (cc/1000 strokes)	Variance (%)	Remarks
	1,000	107.5 ± 1.6	±4	Basic
H	400	22 ± 1.5	±10.0	
Z	510	-	-	Basic
A	1,000	107.5 ± 1	-	
B	1,200	(112.5) ± 2	-	
C	500	(78)	-	
D	1,200	(103)	-	
I	150	(235)	-	

Governor Adjustment

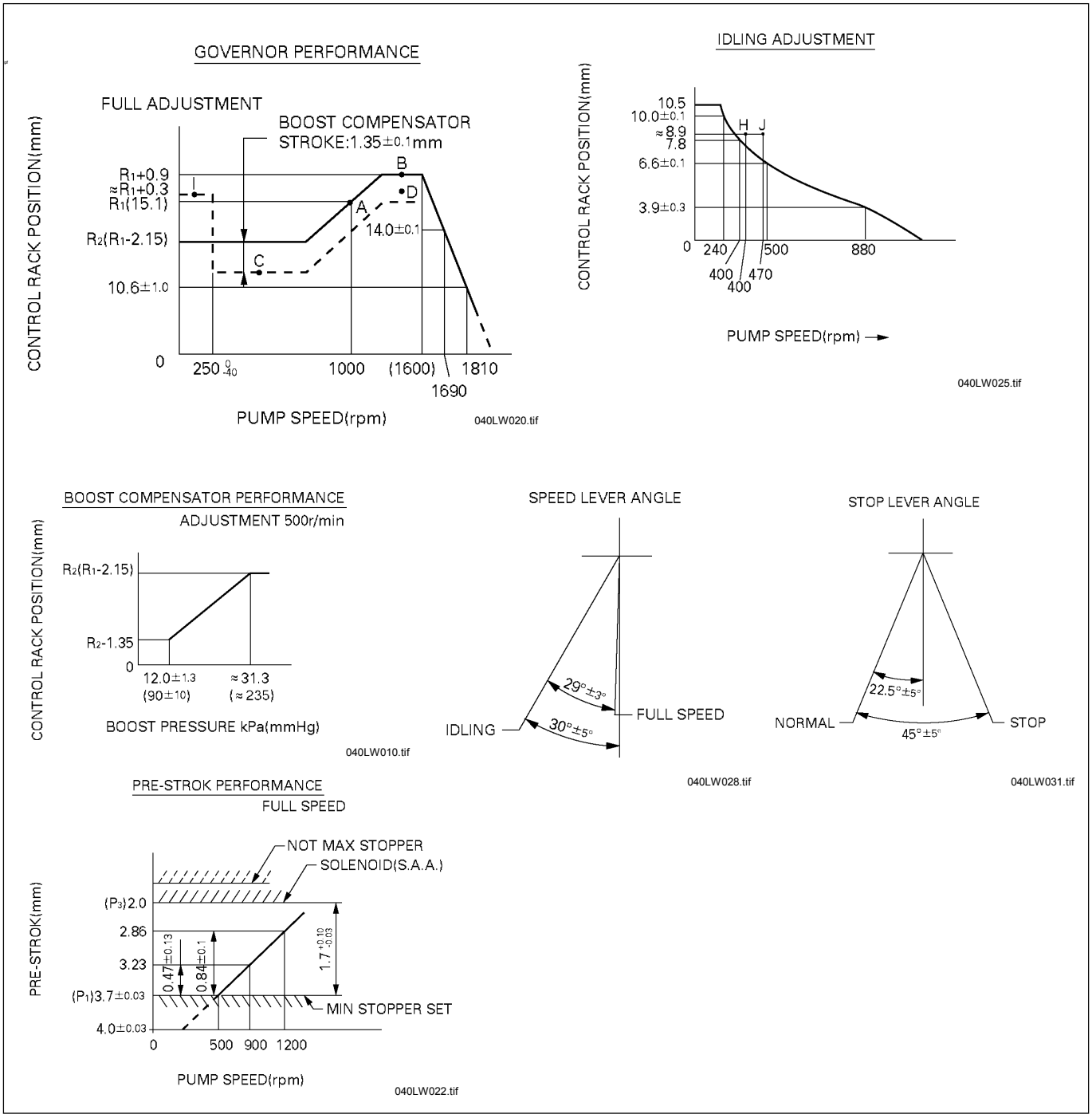

INJECTION VOLUME AND GOVERNOR PERFORMANCE DIAGRAM

Identification Numbers : 107492-1062 / 107492-1120 / 897212-9350 (ISUZU NO.)
[4HE1-TC Engine]
Pre-stroke : No. 1 plunger 4.0 ± 0.03 mm
Injection order : 1 - 3 - 4 - 2 (interval 90° ± 15')-Plungers are numbered from the Governor side
Tappet clearance : Bolt adjustment type : More than 0.3 mm for all cylinders.
: Shim adjustment type : Manually rotate the camshaft 2-3 times and confirm that it rotates smoothly.

Injection Volume

Adjusting point	Pump speed (r.p.m.)	Injection volume (cc/1000 strokes)	Variance (%)	Remarks
	1,000	107.5 ± 1.6	± 4	Basic
H	400	22 ± 1.5	± 14	
Z	510	-	-	Basic
A	1,000	107.5 ± 1	-	
B	1,400	(121.5) ± 2	-	
C	500	(78) ± 2	-	
D	1,400	(113)	-	
I	150	(235)	-	

Governor Adjustment

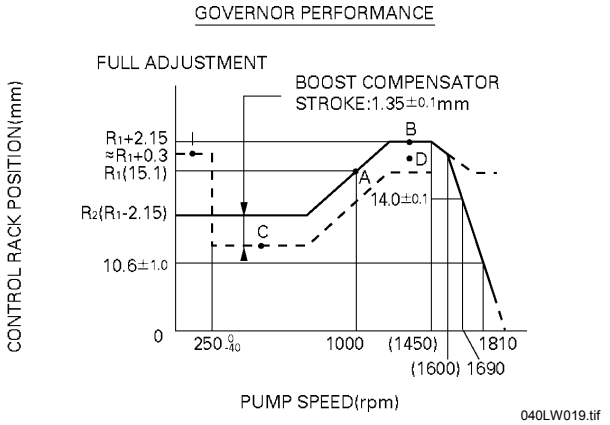

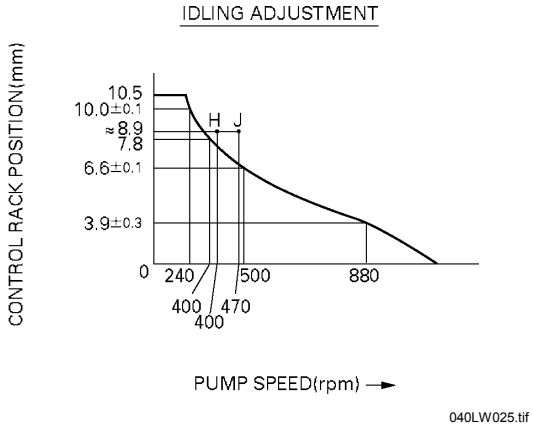

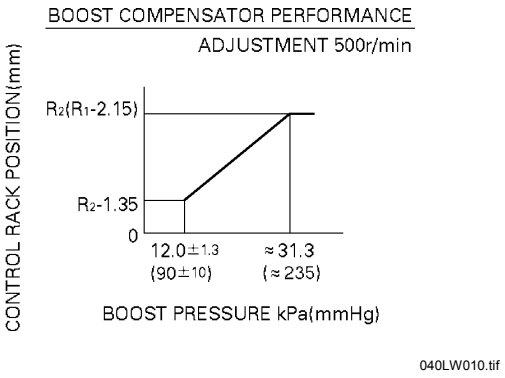

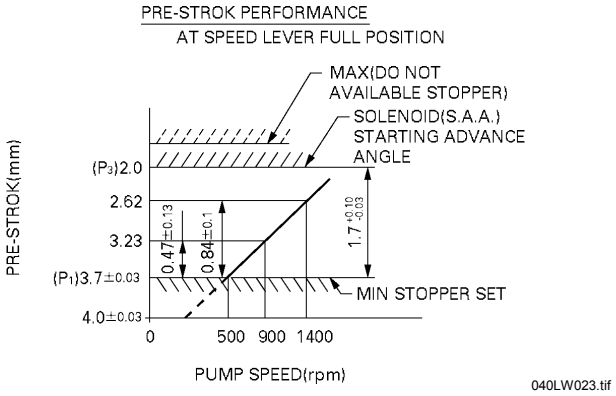

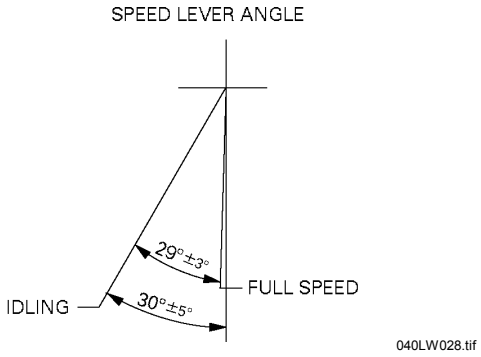

INJECTION VOLUME AND GOVERNOR PERFORMANCE DIAGRAM

Identification Numbers : 10749-1032 / 107492-1130
[4HE1-TC Engine]
Pre-stroke : No. 1 plunger 4.0 ± 0.03 mm
Injection order : 1 - 3 - 4 - 2 (interval 90° ± 15') Plungers are numbered from the Governor side
Tappet clearance : Bolt adjustment type : More than 0.3 mm for all cylinders.
: Shim adjustment type : Manually rotate the camshaft 2-3 times and confirm that it rotates smoothly.

Injection Volume

Adjusting point	Pump speed (r.p.m.)	Injection volume (cc/1000 strokes)	Variance (%)	Remarks
	900	78 ± 1.6	± 4	Basic
H	400	19 ± 1.5	± 14	
Z	500	-	-	Basic
A	900	78 ± 1	-	
B	1,450	(98.5) ± 2	-	
C	500	(67.5)	-	
D	1,450	(91.5)	-	
E	700	(78)	-	
I	150	(220)	-	

Governor Adjustment

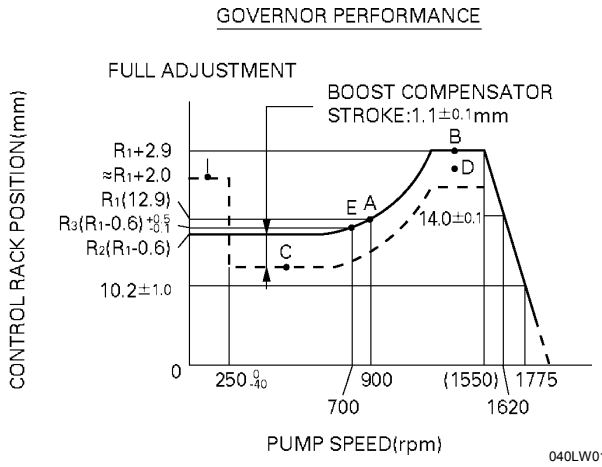

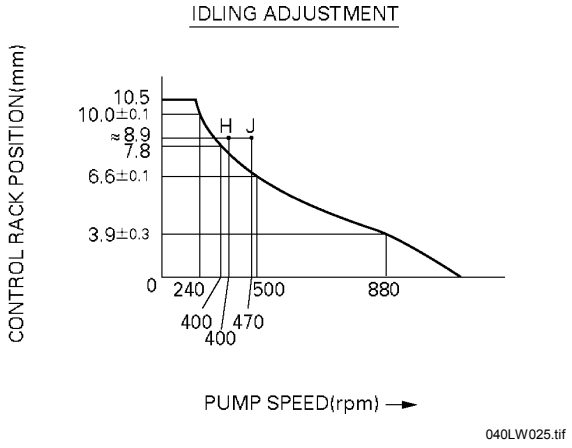

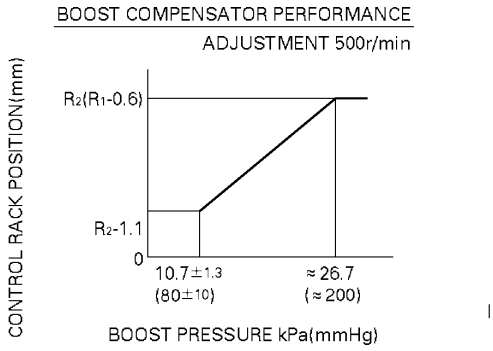

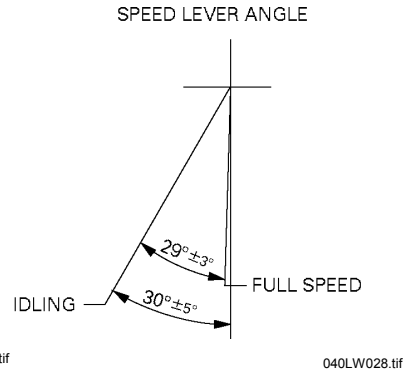

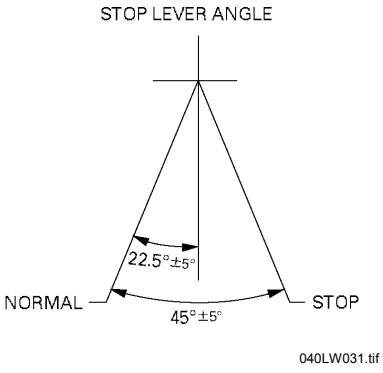

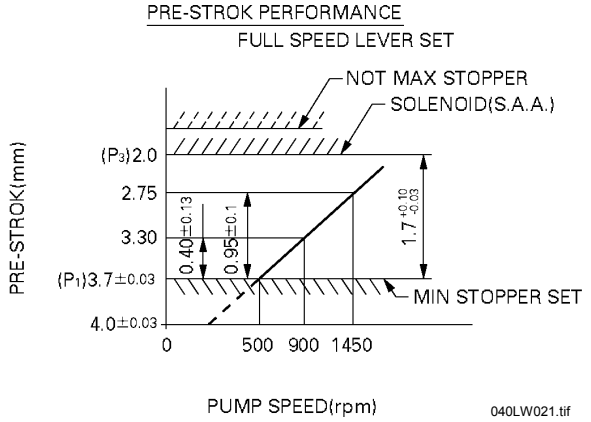

ANEROID COMPENSATOR ADJUSTMENT

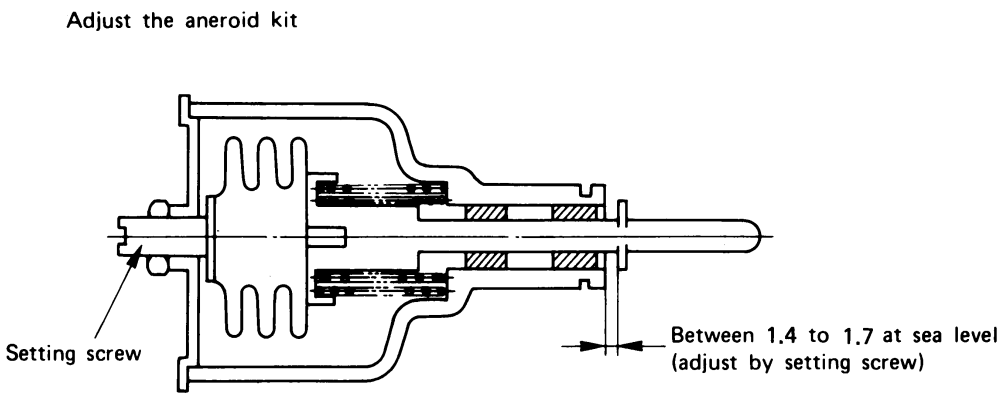

6C-74-1.tif

FUEL TANK

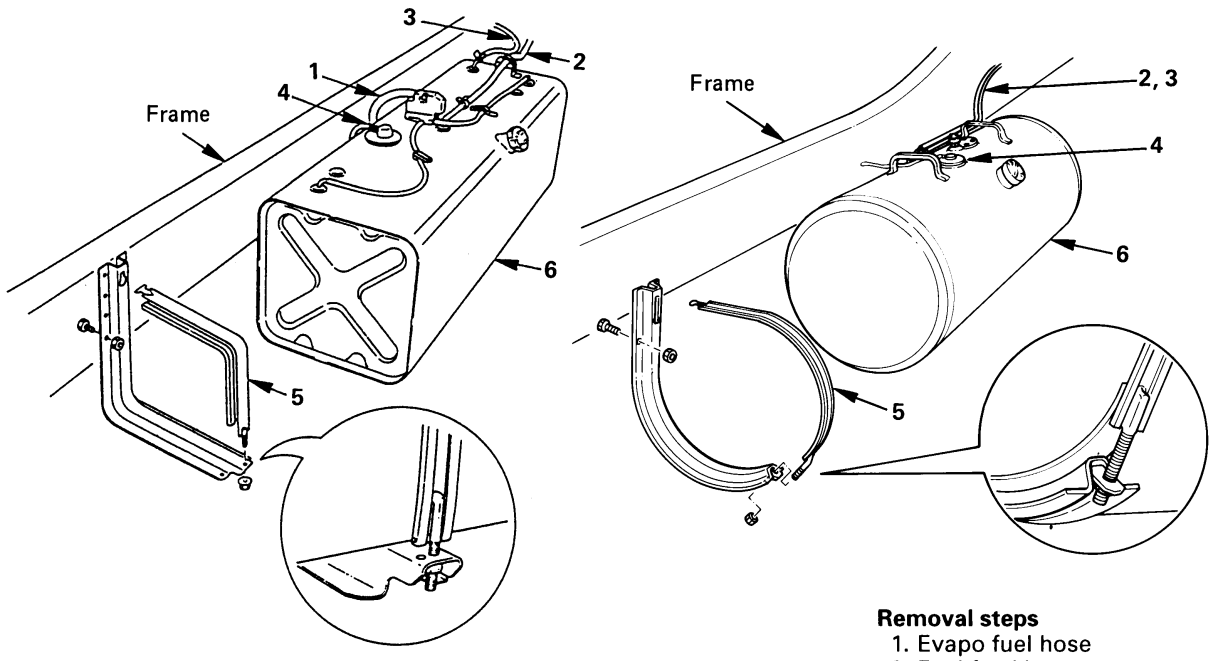

Removal steps
1. Evapo fuel hose
2. Fuel feed hose
3. Fuel return hose
4. Fuel gauge unit connector
5. Band
6. Fuel tank

Installation steps
To install, follow the removal steps in the reverse order.

6C-75-1.tif

REMOVAL

Preparation

- Disconnect battery ground cable.
- Loosen fuel filler cap.
- Drain fuel from drain plug.
- After the drain fuel, tighten the drain plug to the specified torque.

N·m (kg·m/lb·ft)
29 (3/22)

1. **Evapo Fuel Hose**
2. **Fuel Feed Hose**
3. **Fuel Return Hose**
   - Plugging the return hose to prevent fuel from getting spilt, tie it to the fame with the plugged end up.
4. **Fuel Gauge Unit Connector**
   - Remove the fuel gauge unit connector.
5. **Band**
   - Remove the nut of the fuel tank fixing band, and then remove the band end on the frame side.

6. **Fuel Tank**
   - Pull out the fuel tank to the outside.

   NOTE:

   When it is not possible to pull out the fuel tank, remove the bracket and then draw out the fuel tank downward.

INSTALLATION

6. **Fuel Tank**

   NOTE:

   When the bracket was removed to take off the fuel tank, install the bracket to the frame and tighten it to the specified torque.

N·m (kg·m/lb·ft)
55 (5.6/41)

   Also, when mounting the fuel tank to the bracket, place the packing section attached to the fuel tank securely on the bracket.

5. **Band**
   - Tighten the band to the specified torque

N·m (kg·m/lb·in)
12 (1.2/104)

4. **Fuel Gauge Unit Connector**
   - Connect the fuel gauge unit connector.
3. **Fuel Return Hose**
2. **Fuel Feed Hose**
   - Set the hose to the pipe more than 25mm deep.
1. **Evapo Fuel Hose**
   - Fill the fuel to the fuel tank.
   - Connect battery ground cable.

FUEL GAUGE UNIT

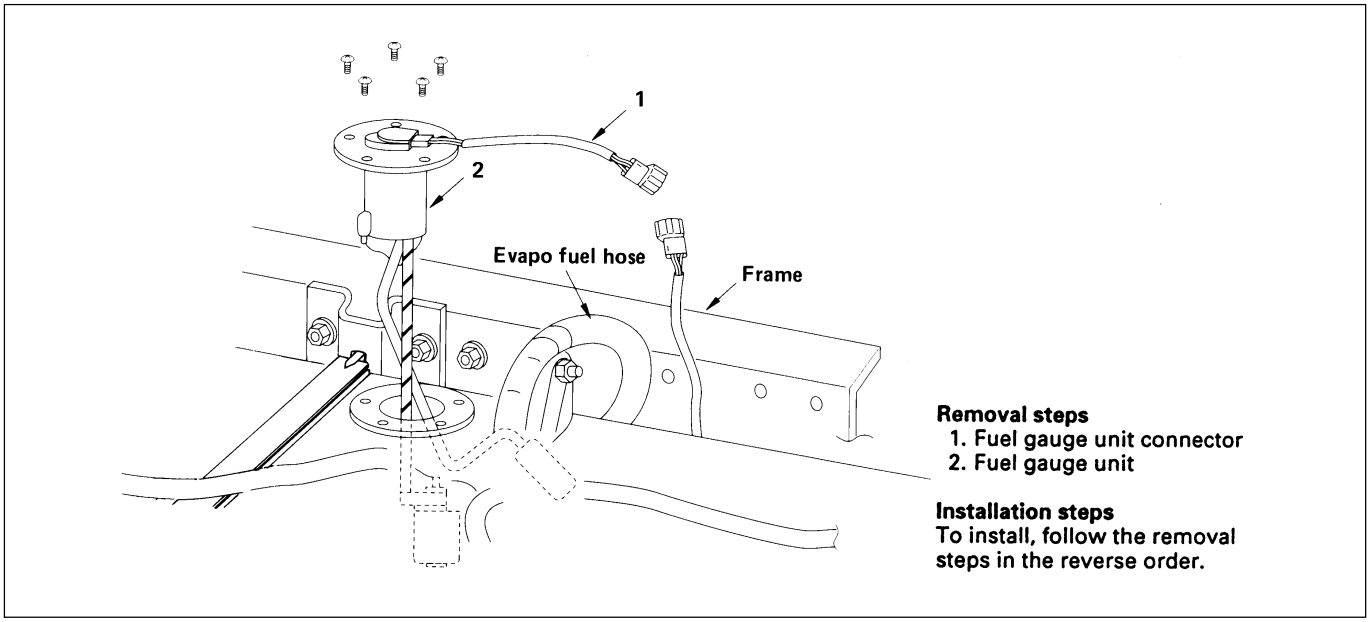

6C-77-1.tif

REMOVAL

Preparation: Disconnect Battery ground cable.

1. **Fuel Gauge Unit Connector**
   - Disconnect fuel gauge unit connector from fuel gauge unit.
2. **Fuel Gauge Unit**
   - Remove fuel gauge unit fixing screw and fuel gauge unit.

NOTE:

- **After removing fuel gauge unit, cover fuel tank with waste to prevent any dust entering**

INSTALLATION

2. **Fuel Gauge Unit**
1. **Fuel Gauge Unit Connector**
   - Connect the wiring connector to the fuel gauge unit.

ACCELERATOR CONTROL

ACCELERATOR CONTROL CABLE

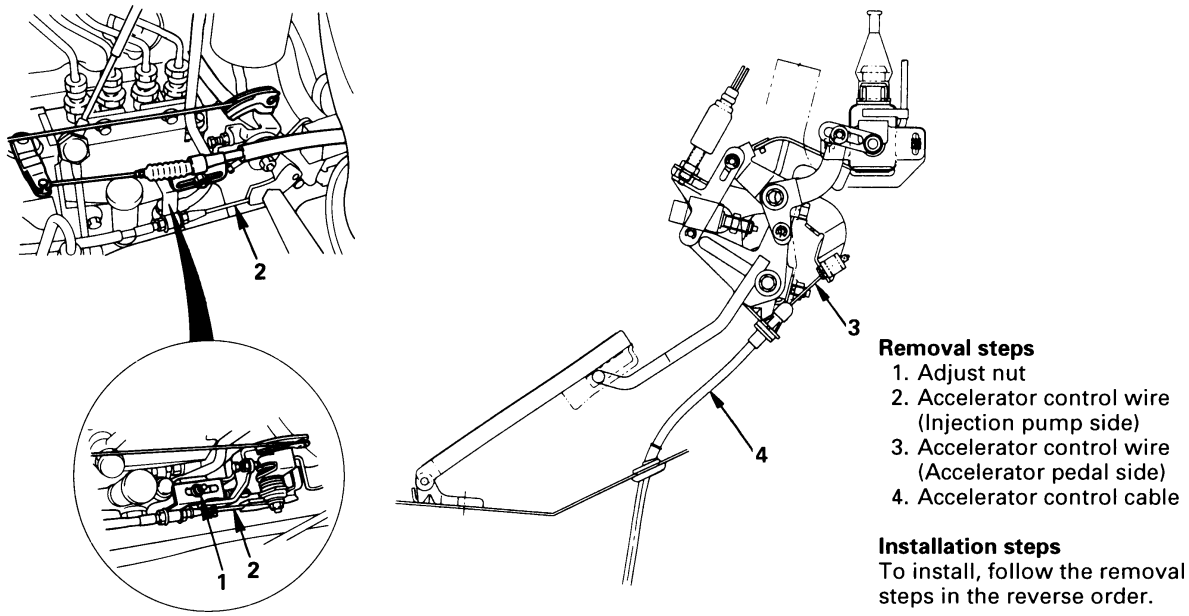

6C-78-1.tif

REMOVAL

1. **Adjust Nut**
   - Loosen the adjust nut on the cable bracket mounted.
2. **Accelerator Control Wire (Injection pump side)**
   - Remove the control wire from injection pump control lever.
3. **Accelerator Control Wire (Accelerator pedal side)**
   - Remove the Accelerator control wire from accelerator pedal.
4. **Accelerator Control Cable**
   - Pull out the wire to the chassis side through the grommet hole of the floor board, and remove the control cable.

INSPECTION

Check the following items, and replace the control cable if any abnormality is found.

- The control cable should move smoothly.
- The control cable should not be bent or kinked.
- The control cable should be free of damage and corrosion.

INSTALLATION

5. **Accelerator Control Cable**
   - Take care that the core wire of the cable does not get damaged or inded.
   - Put the cable through the grommet hole from under the floor.
   - Set the groove of the grommet securely into the floor panel.
4. **Accelerator Control Wire (Accelerator Pedal side)**
   - Connect the accelerator control wire to Accelerator pedal.
3. **Cable Clips**
   - Install the cable clip to chassis frame.
   - Tighten the cable clips to the specified torque

N·m (kg·m/lb·ft)
16 (1.6/12)

2. **Accelerator Control Wire**
1. **Adjust Nut**
   - Attach the end tip of the wire to the engine control lever.
   - Pull the outer cable gently toward the front of the vehicle, and provide the engine control wire and the accelerator control wire an appropriate play before fastening the clamp with a nut.

N·m (kg·m/lb·in)
8 (0.8/69)

   - Check to see if the injection pump lever is at the idle position (with the lever in touch with the stopper bolt).
   - Connect the battery ground cable.
   - Check to see if the accelerator pedal fully is in the range of 5 to 10mm above the pedal pad.
   - Press down on the accelerator pedal fully, and check to see if the engine rotates at the maximum speed with the linkage in the smooth operation.
   - In the operating range of the accelerator pedal, check to see if the accelerator pedal and the injection pump lever return without fail to the original positions.

ACCELERATOR PEDAL

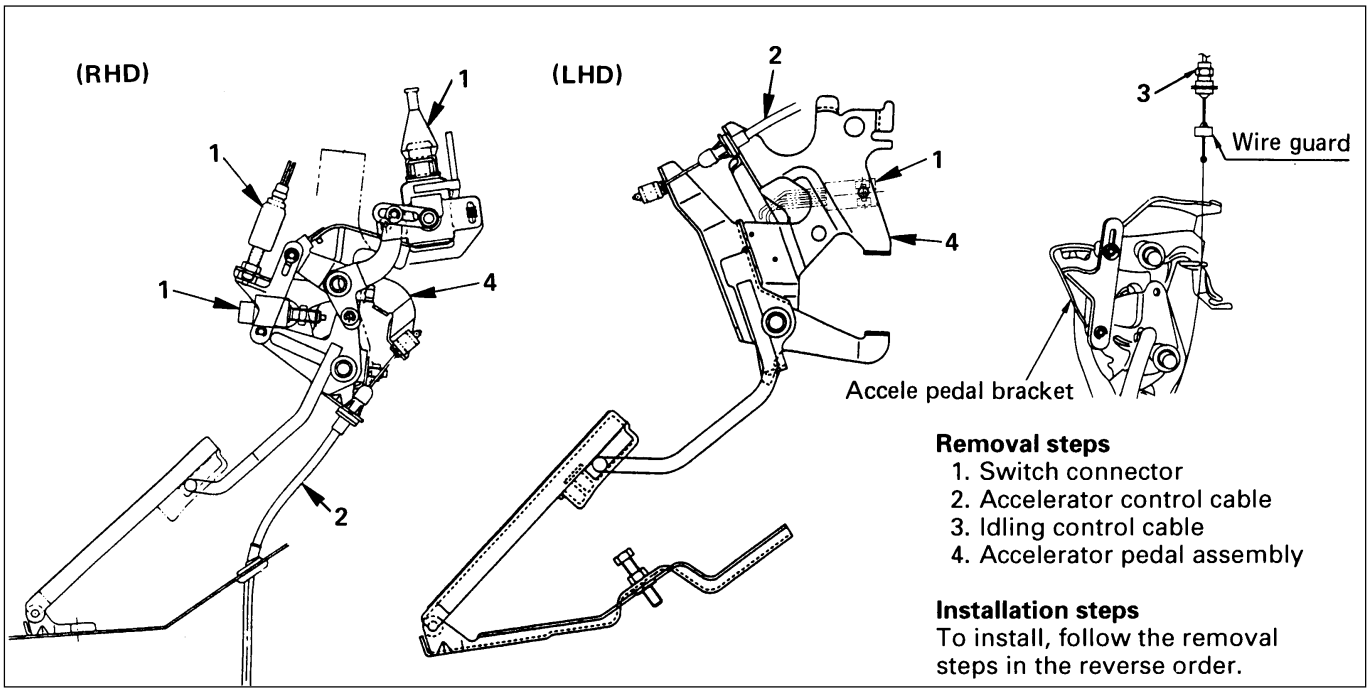

6C-80-1.tif

REMOVAL

1. **Switch Connector**
2. **Accelerator Control Cable.**
   - Remove control cable from Accelerator pedal bracket.
3. **Idling Control Cable**
   - Remove control cable from accelerator pedal bracket.
4. **Accelerator Pedal Assembly**
   - Remove accelerator pedal assembly from brake pedal bracket.

INSTALLATION

4. **Accelerator Pedal Assembly**
   - Apply grease to the sliding portion, and install it to the brake pedal bracket.
3. **Idling Control Cable**
   - Install the idling control cable to the lever of the accelerator pedal bracket.
2. **Accelerator Control Cable**
   - After confirming that the idling control knob is turned fully to the left, install the accelerator control cable.
1. **Switch Connector**

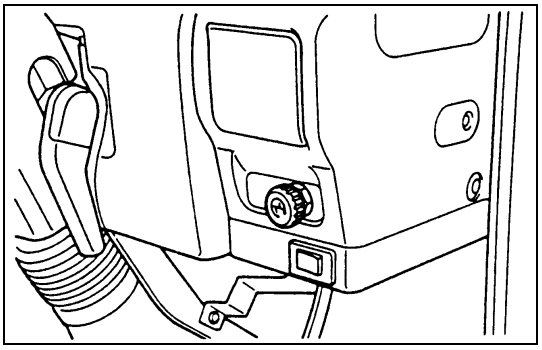

6C-80-2.tif

IDLING CONTROL CABLE

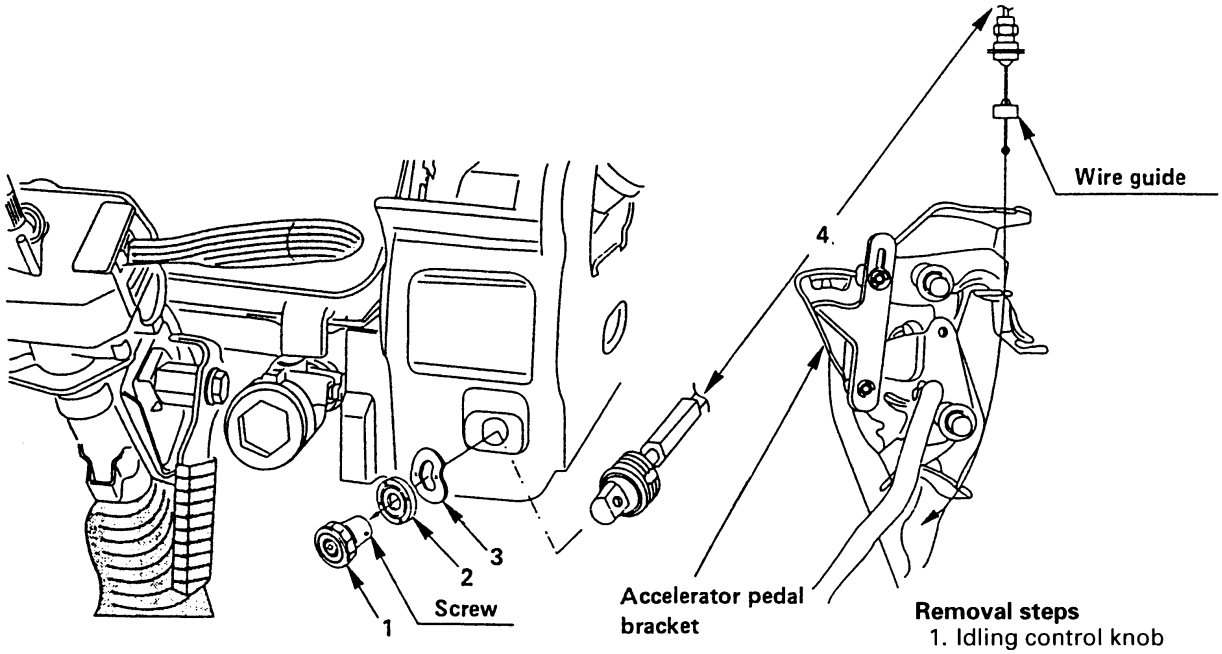

Removal steps
1. Idling control knob
2. Idling control cable nut
3. Wave washer
4. Idling control cable

Installation steps
To install, follow the removal steps in the reverse order.

6C-81-1.tif

REMOVAL

1. **Idling Control Knob**
   - Loosen the idling control knob screw and remove the knob from cable.
2. **Idling Control Cable Nut**
3. **Wave Washer**
4. **Idling Control Cable**
   - Remove control cable from accelerator pedal bracket.

INSTALLATION

4. **Idling Control Cable**
   - Install control cable to Accelerator pedal bracket.
3. **Wave Washer**
2. **Idling Control Cable Nut**
   - Insert the idling control cable into the specified hole of the instrument panel.
   - Install the washer to the cable, and tighten it with a nut.

1. **Idling Control Knob**
   - Insert the idling control knob into the cable, and tighten the screw.

Inspection:

- With the idling control knob not in use, check to see if the injection pump lever is at the idle position (with the lever in contact with the stopper bolt).
- With the idling control knob turned fully to the right, check to see if the number of the engine idling rotations gets to 1,500 rpm or more.

AIR CLEANER ELEMENT

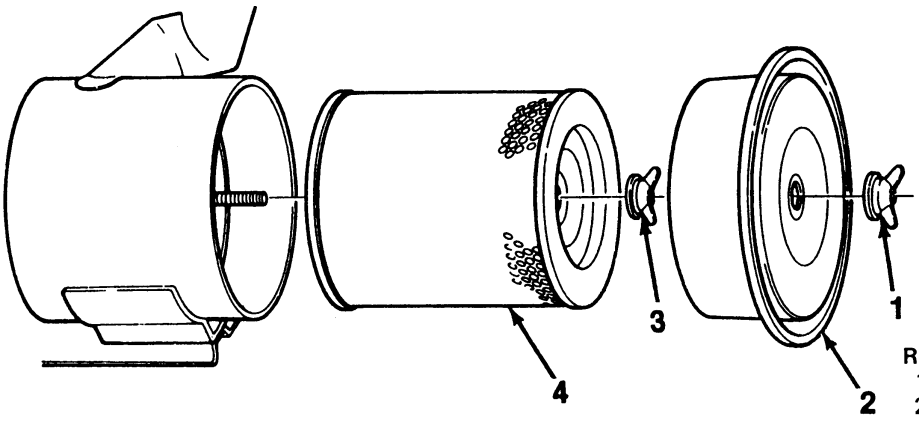

Removal steps
1. Cover wing nut
2. End cover
3. Filter wing nut
4. Air cleaner element

Installation steps
To install, follow the removal steps in the reverse order.

6C-83-1.tif

REMOVAL

1. **Cover Wing Nut**
2. **End Cover**
3. **Filter Wing Nut**
4. **Air Cleaner Element**

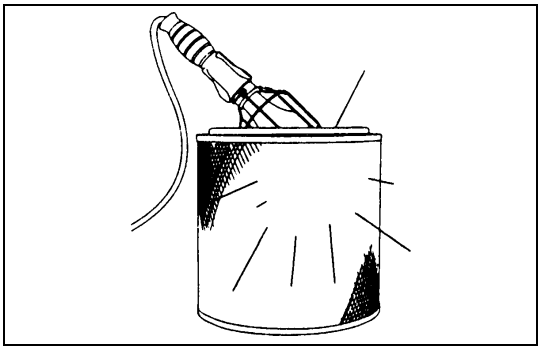

6C-83-2.tif

Clean

- Wipe out the inside of the Air cleaner assembly
- Wipe off the Cover

Inspection

- The air filter with a light for fears or holes.

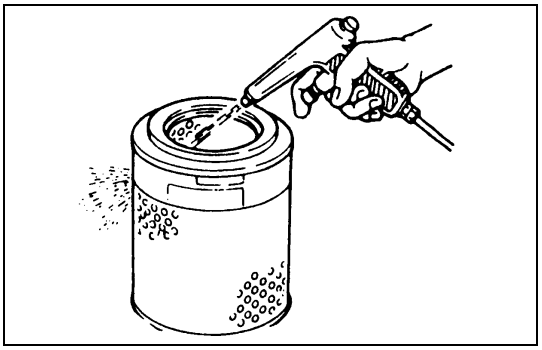

6C-83-3.tif

Cleaning Method

Dust Fouled Element

Rotate the element with your hand while applying compressed air to the inside of the element. This will blow the dust free.

Compressed air pressure	Kpa (Kg/cm^2/Psi)
392 - 490 (4 - 5/57 - 71)	

CAUTION

Do not bang the element against another object in an attempt to clean it. Damage to the element will result.

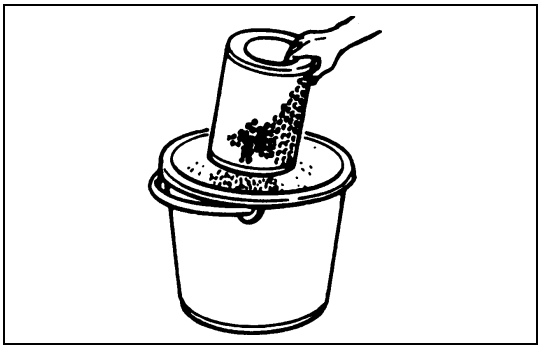

6C-84-1.tif

Carbon and Dust Fouled Element

1. Prepare a cleaning solution of Isuzu Genuine Element Cleaner (Donaldson D1400) diluted with water.
2. Submerge the element in the solution for twenty minutes.

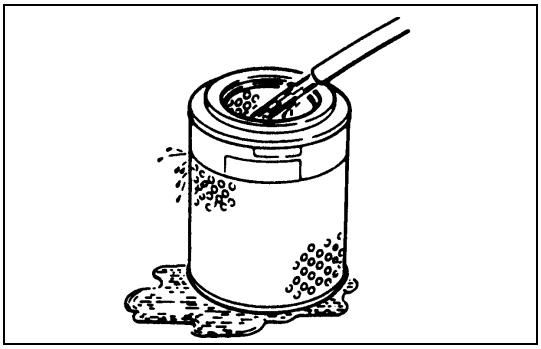

6C-84-2.tif

3. Remove the element from the solution and rinse it well with running water.
   Water pressure must not exceed 274 Kpa (2.8 kg/cm^2/40 Psi)

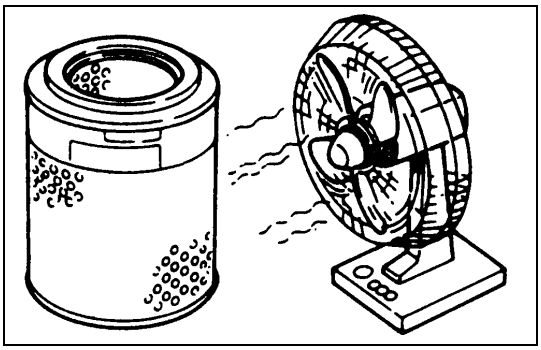

6C-84-3.tif

4. Dry the element in a well ventilated area.
   An electric fan will hasten drying.

NOTE:

Do not use compressed air or an open flame to dry the element quickly. Damage to the element will result.

It will usually take two or three days for the element to dry completely. Therefore, it is a good idea to have a spare on hand to use in the interim.

INSTALLATION

4. **Air Cleaner Element**
3. **Filter Wing Nut**
2. **End Cover**
1. **Cover Wing Nut**

MEMO

SECTION 6D

ENGINE ELECTRICAL

CONTENTS

PAGE

Battery ..... Section 6D1

Starting System..... Section 6D2

Charging System ..... Section 6D3

QOS-II Preheating System ..... Section 6D6

SECTION 6D1

BATTERY

CONTENTS

PAGE

General Description..... 6D1 - 1

Diagnosis..... 6D1 - 2

On-Vehicle Service ..... 6D1 - 4

Battery Charging..... 6D1 - 4

Jump Starting ..... 6D1 - 4

Removal and Installation of The Battery ..... 6D1 - 6

Main Data and Specifications ..... 6D1 - 6

GENERAL DESCRIPTION

There are six battery fluid caps at the top of the battery.

The battery is completely sealed except for the six small vent holes at the side. These vent holes permit the escape of small amounts of gas generated by the battery.

This type of battery has the following advantages over conventional batteries:

1. There is no need to add water during the entire service life of the battery.
2. The battery protects itself against overcharging.
   The battery will refuse to accept an excessive charge.
   (A conventional battery will accept an excessive charge, resulting in gassing and loss of battery fluid.)
3. The battery is much less vulnerable to self-discharge than a conventional type battery.

DIAGNOSIS

1. VISUAL INSPECTION

Inspect the battery for obvious physical damage, such as a cracked or broken case, which would permit electrolyte loss.

Replace the battery if obvious physical damage is discovered during inspection.

Check for any other physical damage and correct it as necessary. If not, proceed to Step 2.

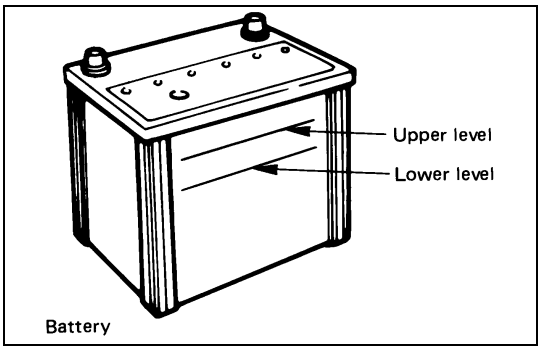

6D1-2-1.tif

2. HYDROMETER CHECK

There is a built-in hydrometer (Charge test indicator) at the top of the battery. It is designed to be used during diagnostic procedures.

Before trying to read the hydrometer, carefully clean the upper battery surface.

If your work area is poorly lit, additional light may be necessary to read the hydrometer.

a. BLUE RING OR DOT VISIBLE - Go to Step 4.
b. BLUE RING OR DOT NOT VISIBLE - Go to Step 3.

3. FLUID LEVEL CHECK

The fluid level should be between the upper level line and lower level line on side of the battery.

a. CORRECT FLUID LEVEL - Charge the battery.
b. BELOW LOWER LEVEL - Replace battery.

4. VOLTAGE CHECK

(1) Put voltmeter test leads to battery terminals.
   a. VOLTAGE IS 12.4V OR ABOVE - Go to Step 5.
   b. VOLTAGE IS UNDER 12.4V - Go to procedure (2) below.

(2) Determine fast charge amperage from specification. (See Main Data and specifications in this section).

   Fast charge battery for 30 minutes at amperage rate no higher than specified value.

   Take voltage and amperage readings after charge.

   a. VOLTAGE IS ABOVE 16V AT BELOW 1/3 OF AMPERAGE RATE - Replace battery.
   b. VOLTAGE IS ABOVE 16V AT ABOVE 1/3 OF AMPERAGE RATE - Drop charging voltage to 15V and charge for 10-15 hours.

   Then go to Step 5.

   c. VOLTAGE IS BETWEEN 12V AND 16V - Continue charging at the same rate for an additional 3-1/2 hours. Then go to Step 5.
   d. VOLTAGE IS BELOW 12V - Replace battery.

5. LOAD TEST

(1) Connect a voltmeter and a battery load tester across the battery terminals.

(2) Apply 300 ampere load for 15 seconds to remove surface charge from the battery.

Remove load.

(3) Wait 15 seconds to let battery recover. Then apply specified load from specifications (See Main Data and Specifications in this section).

Read voltage after 15 seconds, then remove load.

a. VOLTAGE DOES NOT DROP BELOW THE MINIMUM LISTED IN FOLLOWING TABLE - The battery is good and should be returned to service.

b. VOLTAGE IS LESS THAN MINIMUM LISTED - Replace battery.

ESTIMATED TEMPERATURE		MINIMUM VOLTAGE
°F	°C	
70	21	9.6
60	16	9.5
50	10	9.4
40	4	9.3
30	-1	9.1
20	-7	8.9
10	-12	8.7
0	-18	8.5
The battery temperature must be estimated by feel and by the temperature the battery has been exposed to for the preceding few hours.		

ON-VEHICLE SERVICE

BATTERY CHARGING

Observe the following safety precautions when charging the battery:

1. Never attempt to charge the battery when the fluid level is below the lower level line on the side of the battery. In this case, the battery must be replaced.
2. Pay close attention to the battery during the charging procedure.

   Battery charging should be discontinued or the rate of charge reduced if the battery feels hot to the touch.

   Battery charging should be discontinued or the rate of charge reduced if the battery begins to gas or spew electrolyte from the vent holes.
3. In order to more easily view the hydrometer blue dot or ring, it may be necessary to jiggle or tilt the battery.
4. Battery temperature can have a great effect on battery charging capacity.
5. The sealed battery used on this vehicle may be either quick-charged or slow-charged in the same manner as other batteries.

   Whichever method you decide to use, be sure that you completely charge the battery. Never partially charge the battery.

JUMP STARTING

JUMP STARTING WITH AN AUXILIARY (BOOSTER) BATTERY

CAUTION:

Never push or to the vehicle in an attempt to start it. Serious damage to the emission system as well as other vehicle parts will result.

Treat both the discharged battery and the booster battery with great care when using jumper cables. Carefully follow the jump starting procedure, being careful at all times to avoid sparking.

WARNING:

Failure to carefully follow the jump starting procedure could result in the following:

1. **serious personal injury, particularly to your eyes.**
2. **Property damage from a battery explosion, battery acid, or an electrical fire.**
3. **Damage to the electronic components of one or both vehicles particularly.**

Never expose the battery to an open flame or electrical spark. Gas generated by the battery may catch fire or explode.

Remove any rings, watches, or other jewelry before working around the battery. Protect your eyes by wearing an approved set of goggles.

Never allow battery fluid t come in contact with your eyes or skin.

Never allow battery fluid to come in contact with fabrics or painted surfaces.

Battery fluid is a highly corrosive acid.

Should battery fluid come in contact with your eyes, skin, fabric, or a painted surface, immediately and thoroughly rinse the affected area with clean tap water.

Never allow metal tools or jumper cables to come in contact with the positive battery terminal, or any other metal surface of the vehicle. This will protect against a short circuit.

Always keep batteries out of the reach of young children.

JUMP STARTING PROCEDURE

1. Set the vehicle parking brake.

   If the vehicle is equipped with an automatic transmission, place the selector lever in the “PARK” position.

   If the vehicle is equipped with a manual transmission place the shift lever in the “NEUTRAL” position.

   Turn “OFF” the ignition.

   Turn “OFF” all lights and any other accessory requiring electrical power.
2. Look at the built-in hydrometer.

   If the indication area of the built-in hydrometer is completely clear, do not try to jump start.
3. Attach the end of one jumper cable to the positive terminal of the booster battery.

   Attach the other end of the same cable to the positive terminal of the discharged battery.

   Do not allow the vehicles to touch each other.

   This will cause a ground connection, effectively neutralizing the charging procedure.

   Be sure that the booster battery has a 12 volt rating.
4. Attach one end of the remaining cable to the negative terminal of the booster battery.

   Attach the other end of the same cable to a solid engine ground (such as the A/C compressor bracket or the generator mounting bracket) of the vehicle with the discharged battery.

   This ground connection must be at least 450 mm (18 in) from the battery of the vehicle whose battery is being charged.

WARNING:
Never attach the end of the jumper cable directly to the negative terminal of the dead battery.

5. Start the engine of the vehicle with the good battery.
   Make sure that all unnecessary electrical accessories have been turned “OFF”.
6. Start the engine of the vehicle with the dead battery.
7. To remove the jumper cables, follow the above directions in the reverse order.
   Be sure to first disconnect the negative cable from the vehicle with the discharged battery.

REMOVAL AND INSTALLATION OF THE BATTERY

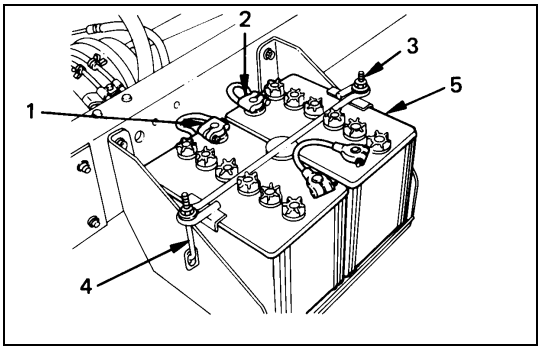

6D1-6-1.tif

REMOVAL

1. Negative cable
2. Positive cable
3. Retainer screw and rods
4. Retainer
5. Battery

INSTALLATION

To install the battery, follow the removal procedure in the reverse order, noting the following points:

1. Make sure that the rod is hooked on the body side.

MAIN DATA AND SPECIFICATIONS

Model	(JIS)	55D23R	75D23R	80D26R	643-700	DELCO 31-750
Voltage	(V)	12	12	12	12	12
Cold-Cranking Performance	(Amp)	356	520	356	700	750
Reserve Capacity	(Min.)	99	180	133	180	160

SECTION 6D2
STARTING SYSTEM

CONTENTS

	PAGE
General Description	6D2 - 1
On-Vehicle Service	6D2 - 4
Unit Repair	6D2 - 6
Reassembly	6D2 - 15

GENERAL DESCRIPTION

STARTING CIRCUIT

The cranking system consists of a battery, starter, starter switch, starter relay, etc. and these main components are connected as shown in Figure. For details of the starting circuit.

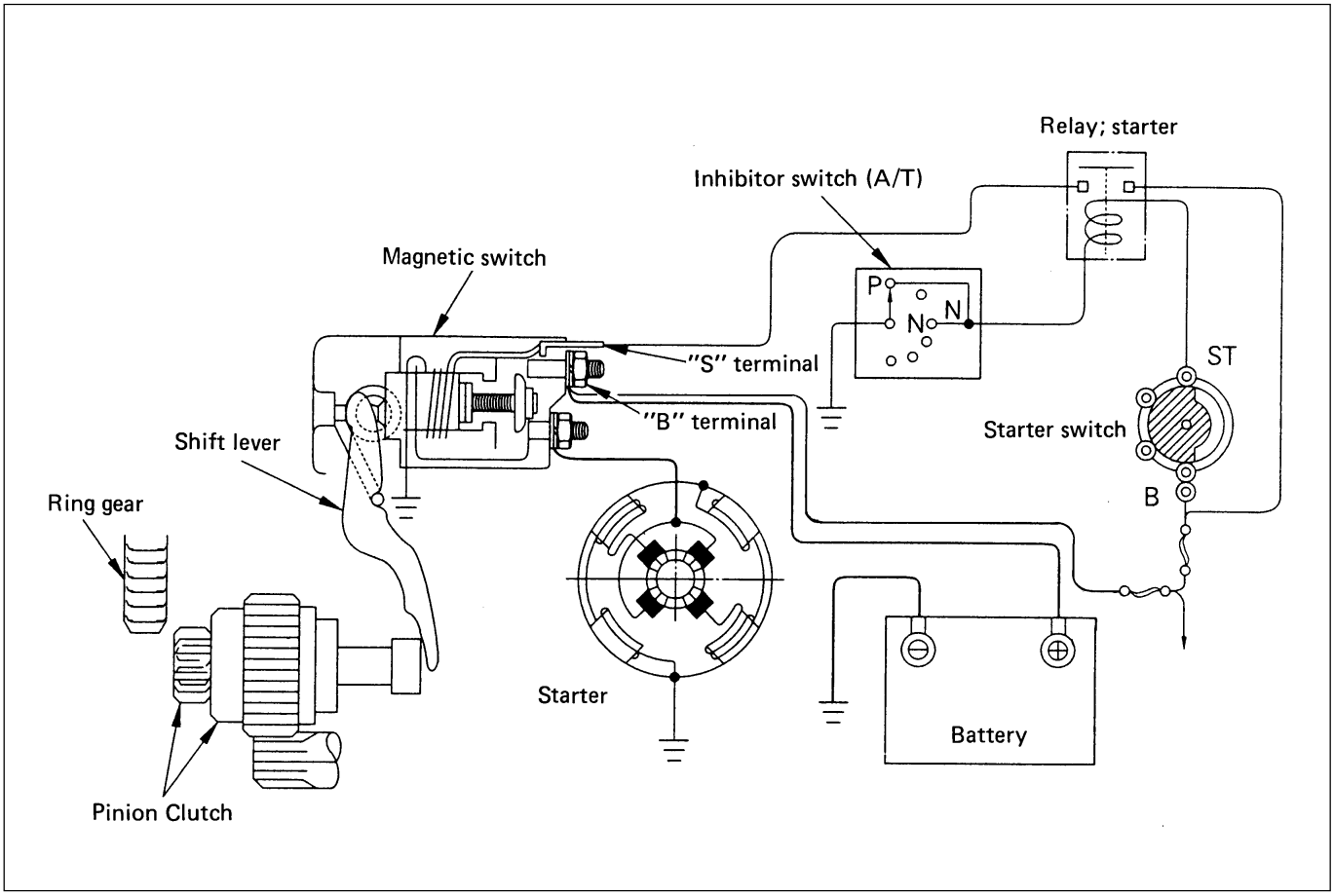

6D2-1-1.tif

STARTER

The starting system employs a magnetic type reduction starter in which the motor shaft is also used as a pinion shaft. When the starter switch is turned on, the contacts of magnetic switch are closed, and the armature rotates. At the same time, the plunger is attracted, and the pinion is pushed forward by the shift lever to mesh with ring gear. Then, the ring gear runs to start the engine. When the engine starts and the starter switch is turned off, the plunger returns, the pinion is disengaged from ring gear, and the armature stops rotation. When the engine speed is higher than the pinion, the pinion idles, so that the armature is not driven.

STARTING CIRCUIT

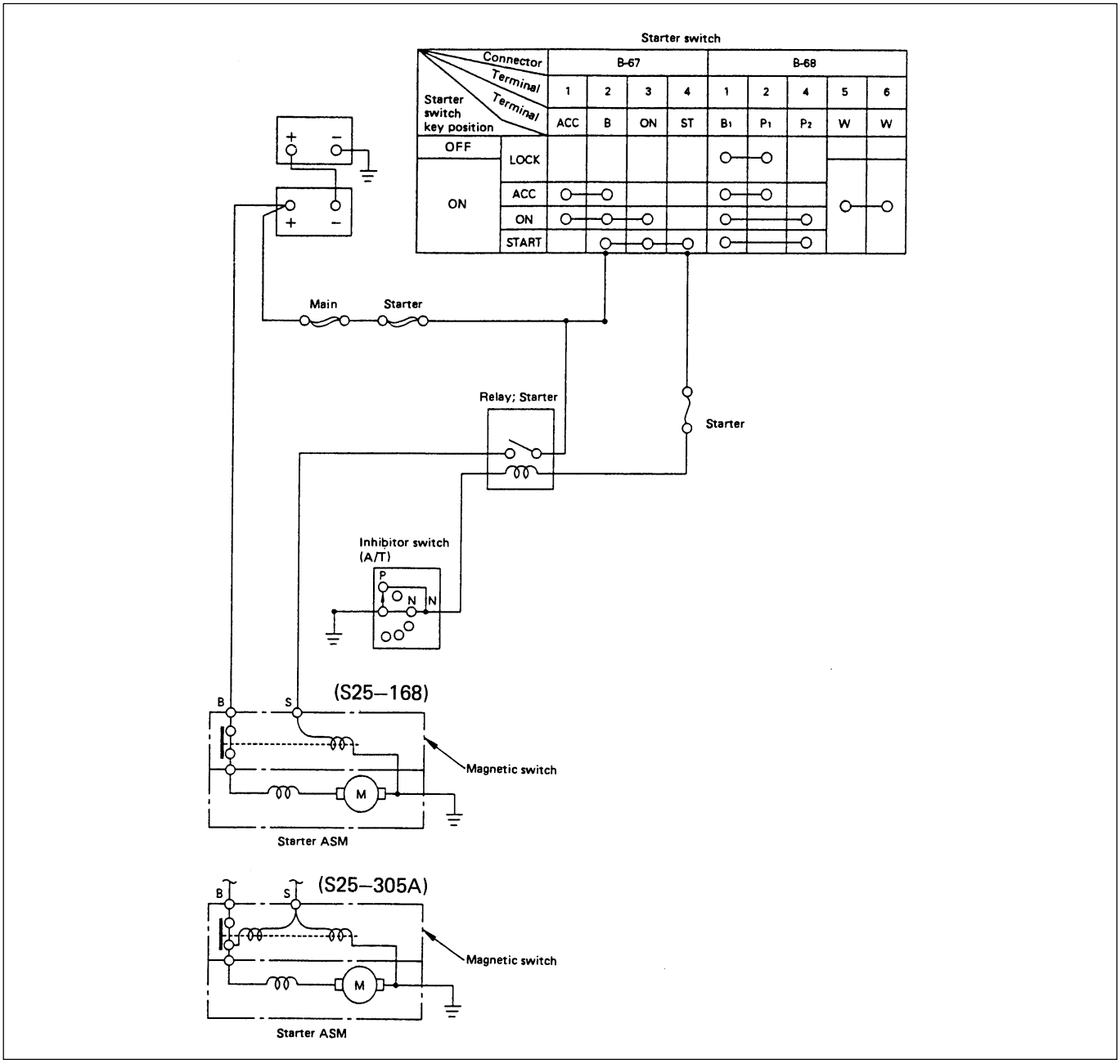

6D2-2-1.tif

STARTING MOTOR

S25—168

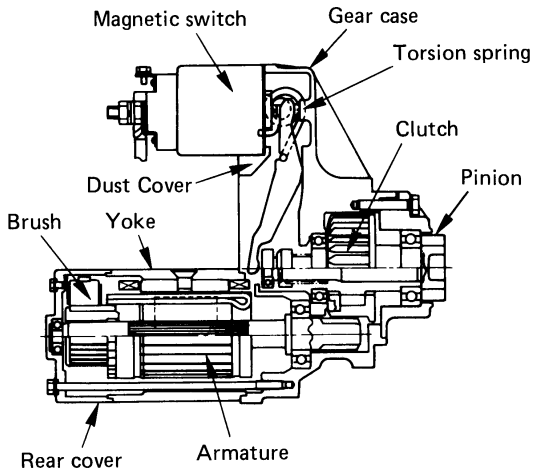

6D2-3-1.tif

S25—305A

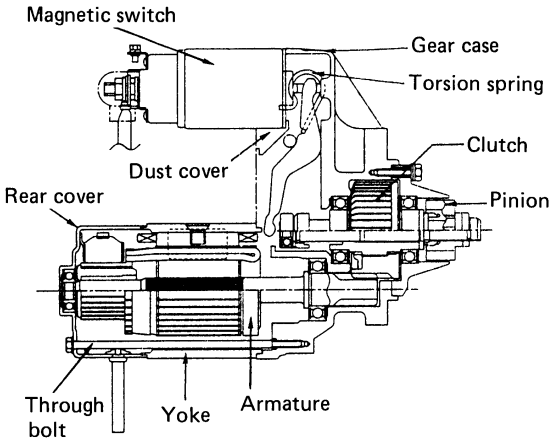

6D2-3-2.tif

ON-VEHICLE SERVICE

STARTER

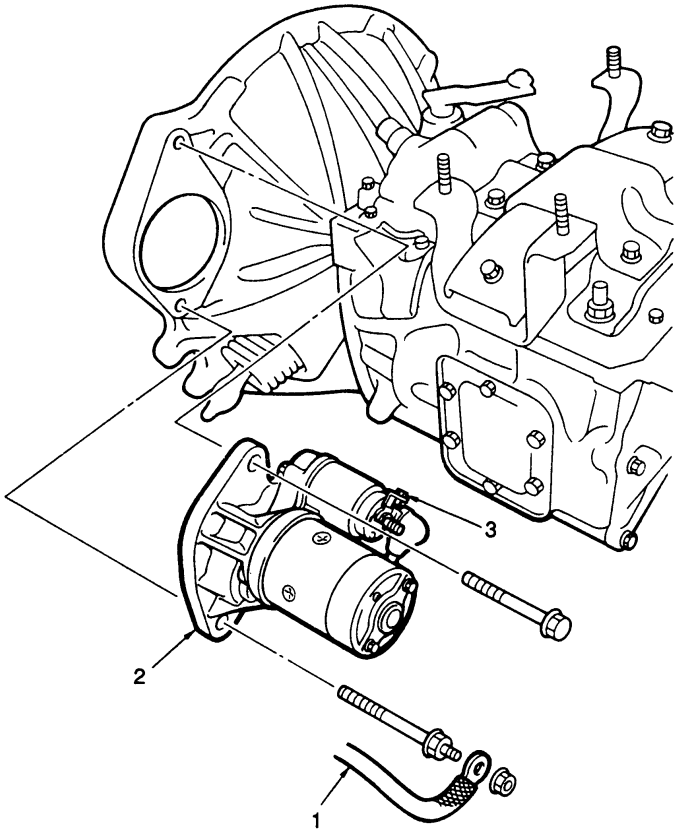

Removal steps
1. Starter earth cable
2. Starter assembly
3. Starter wiring connector

Installation steps
To install, follow the removal steps in the everse order.

6D2-4-1.tif

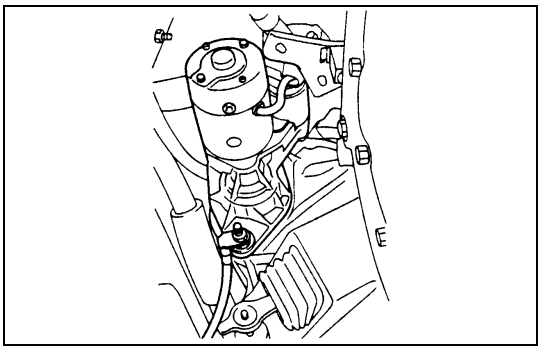

6D2-4-2.tif

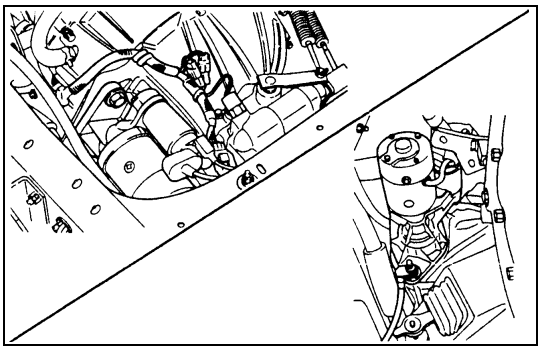

6D2-4-3.tif

REMOVAL

Preparation

- Battery ground cable (both batteries)

1. Starter Earth Cable

- Disconnect the starter earth cable at the starter motor.
- Disconnect the front frame harness connector somewhere near the control box of the transmission, remove each clip that fastens the harness.

2. Starter Assembly

- Remove the starter assembly from flywheel housing.

3. Starter Wiring Connector

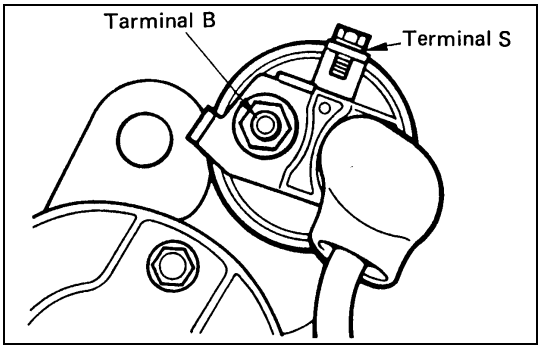

6D2-5-1.tif

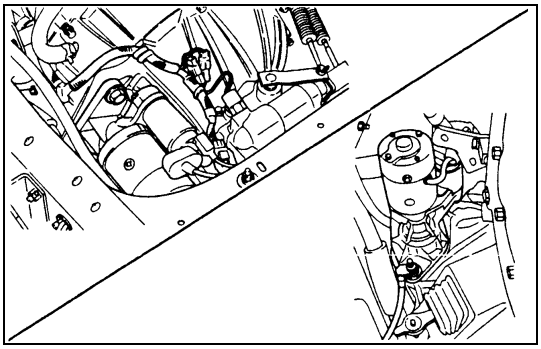

6D2-5-2.tif

INSTALLATION

3. Starter Wiring Connector

2. Starter Assembly

- Install the starter to the flywheel housing.

Starter Bolt Torque	N·m (kg·m/lb·ft)
126 (12.9/93)	

1. Starter Earth Cable

- Connect the earth cable to the starter motor.
- Connect the battery ground cable.

UNIT REPAIR

S25-168

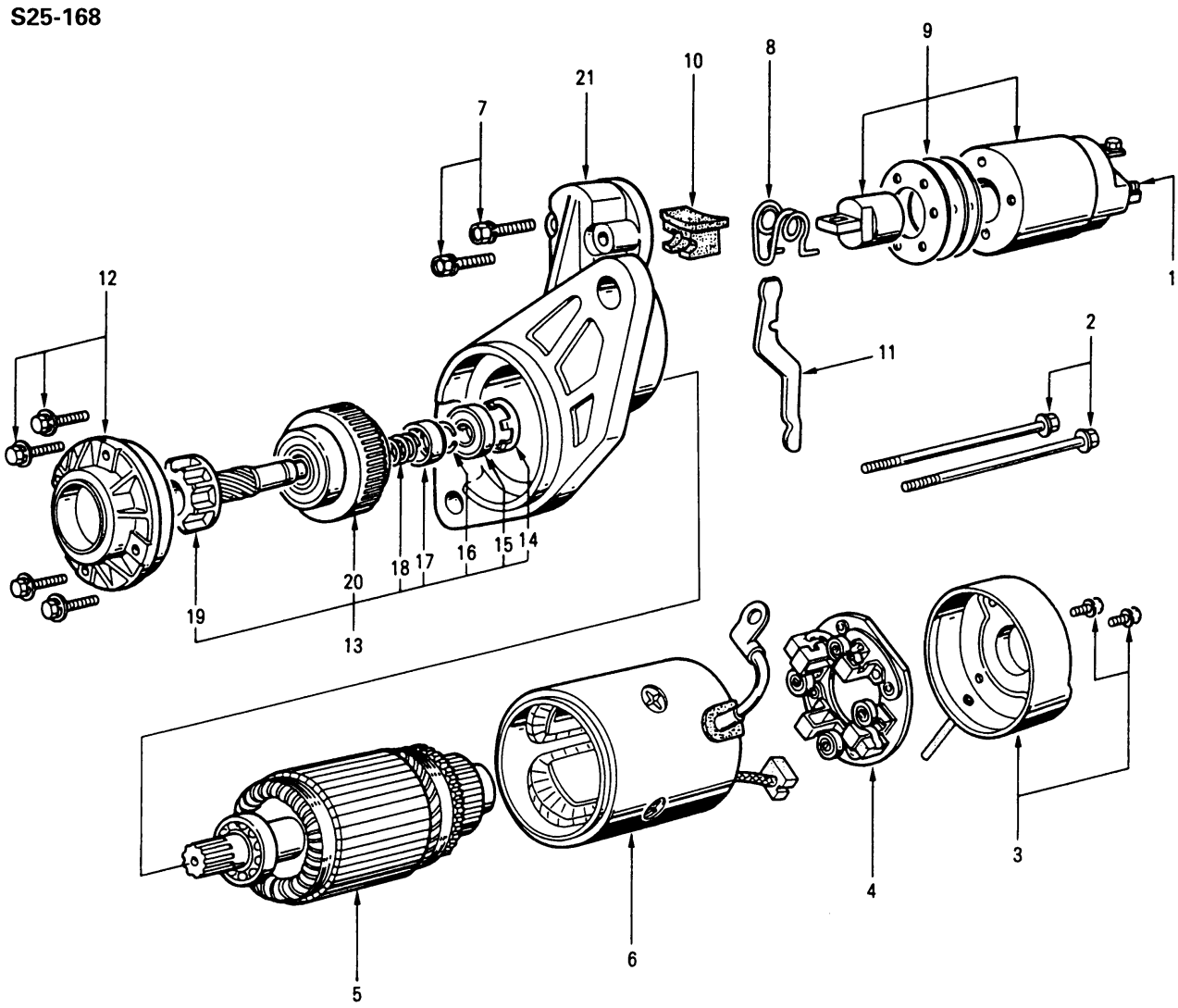

Disassembly steps

1. Lead wire nut
2. Through bolt
3. Rear cover
4. Brush holder
5. Armature
6. Yoke
7. Bolt
8. Torsion spring
9. Magnetic switch assembly
10. Dust cover
11. Shift lever
12. Braring retainer
13. Clutch assembly
14. Bearing holder
15. Ball bearing
16. Pinion stopper
17. Pinion stopper
18. Return spring
19. Pinion shaft
20. Pinion clutch
21. Gear case

Reassembly steps

To reassemble, follow the disassembly steps in the reverse order.

6D2-6-1.tif

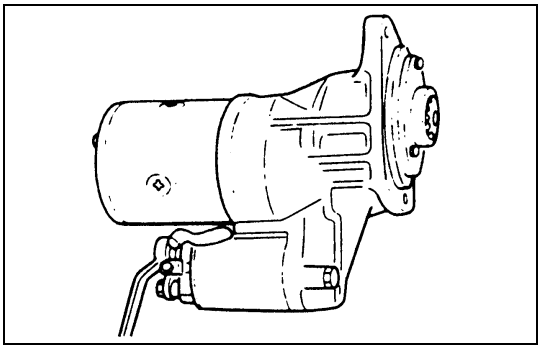

6D2-7-1.tif

DISASSEMBLY

1. **Lead Wire Nut**

   Disconnect the lead wire at the magnetic switch.

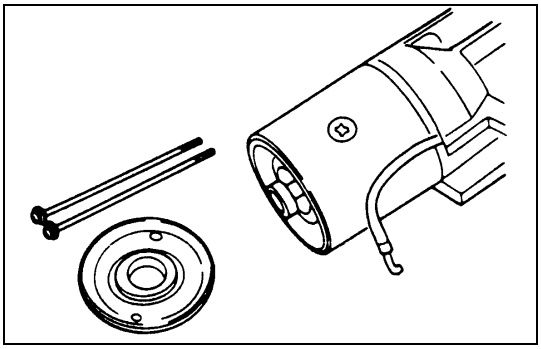

6D2-7-2.tif

2. **Through Bolt**
3. **Rear Cover**

   Remove the through bolts, then remove the rear cover.

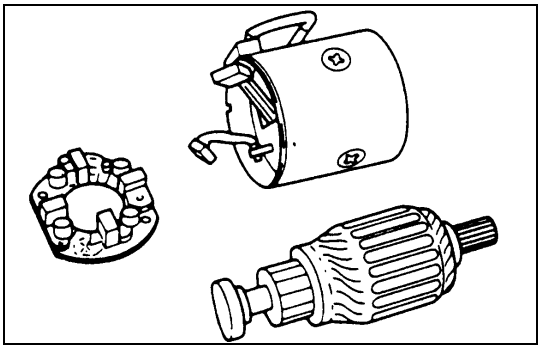

6D2-7-3.tif

4. **Brush Holder**
5. **Armature**
6. **Yoke**

   Remove the brush holder and pull the armature assembly from the yoke.

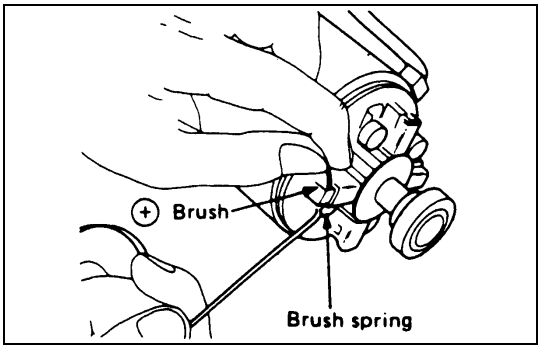

6D2-7-4.tif

Remove the four brushes from the brush holders.

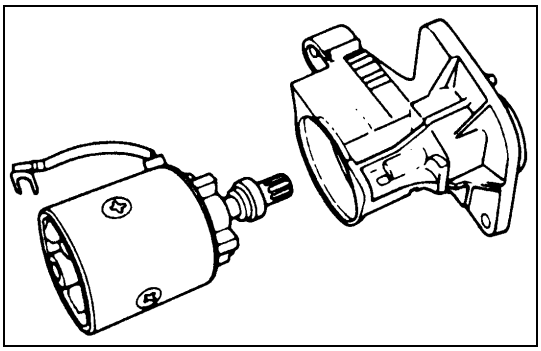

6D2-7-5.tif

Remove the yoke along with the armature and the brush holder from the drive housing.

Remove the brushes and commutator carefully so as not to allow them in contact with the adjacent parts.

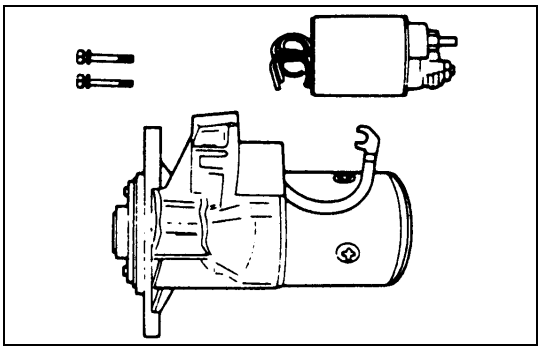

6D2-8-1.tif

7. **Bolt**
8. **Torsion Spring**
9. **Magnetic Switch Assembly**
   Remove the magnetic switch bolts, then remove the switch from the shift lever.

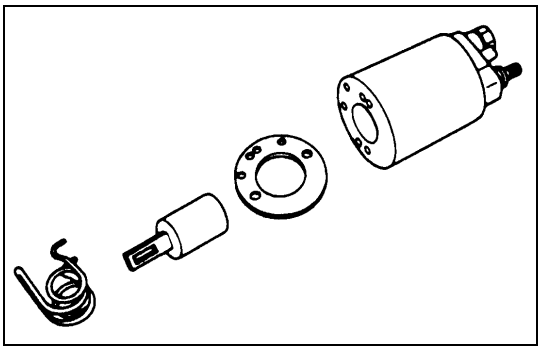

6D2-8-2.tif

Remove the torsion spring from the magnetic switch.

10. **Dust Cover**
11. **Shift Lever**

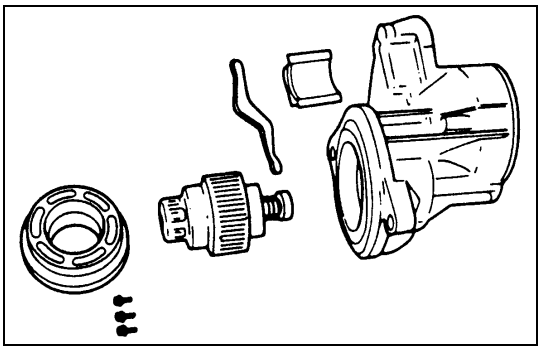

6D2-8-3.tif

12. **Bearing Retainer**
13. **Clutch Assembly**
    1) Remove the bearing retainer.
    2) Remove the clutch assembly from the gear case.

14. **Bearing Holder**
15. **Ball Bearing**
16. **Pinion Stopper Clip**
17. **Pinion Stopper**
18. **Return Spring**

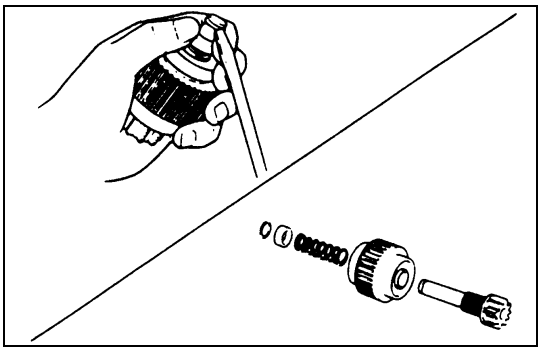

6D2-8-4.tif

19. **Pinion Shaft**
20. **Pinion Clutch**
    Use a screwdriver to remove the stopper clip. Then disassemble the clutch assembly.

S25-305A

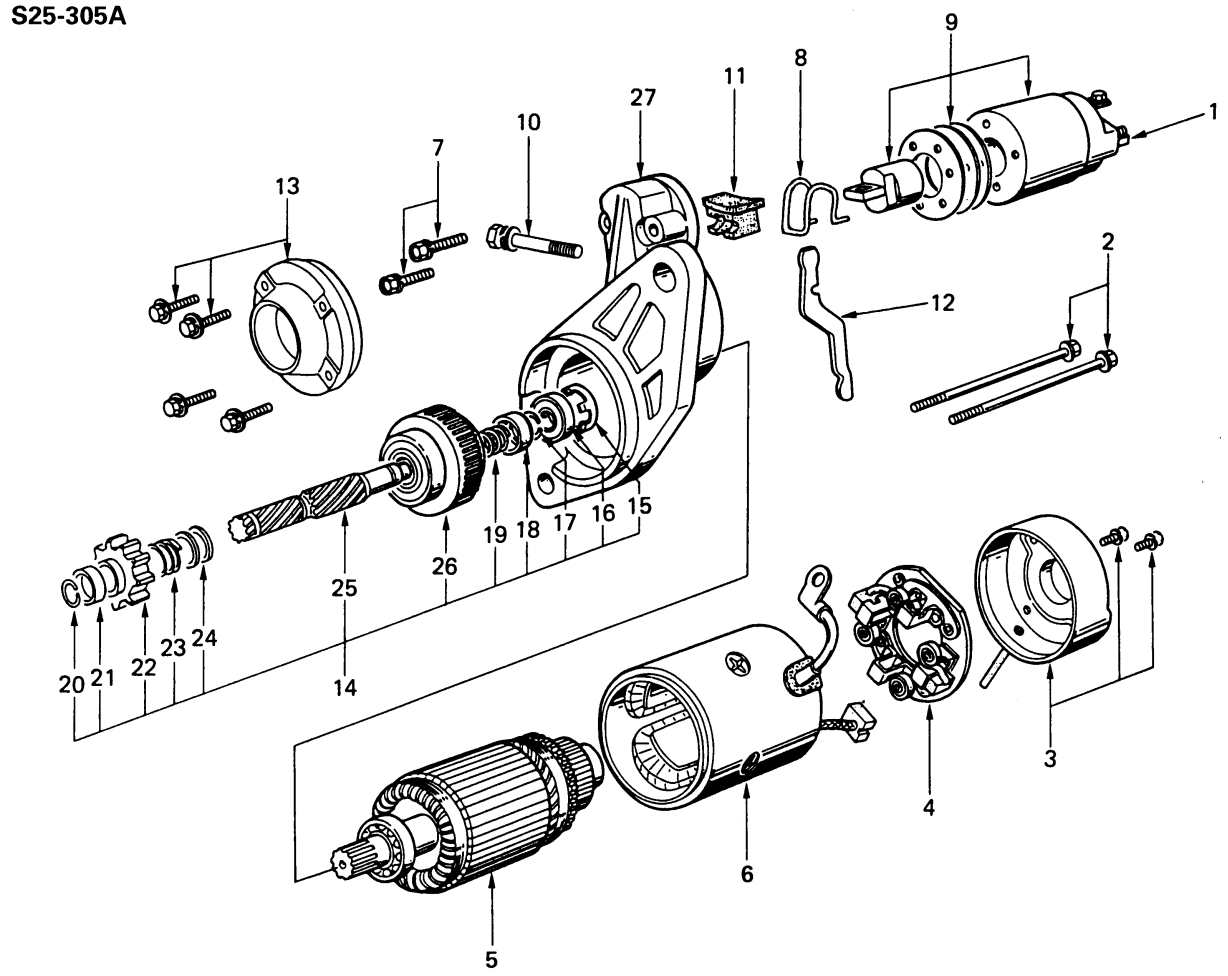

Disassembly steps
1. Lead wire nut
2. Throtu bolt
3. Rear cover
4. Brish holder
5. Armature
6. Yoke
7. Bolt
8. Torsion spring
9. Magnetic switdh assembly
10. Bolt
11. Dust cover
12. Shift lever
13. Bearing retainer
14. Clutch assembly
15. Bearing holder
16. Ball bearing
17. Pinion stopper crip
18. Pinion stopper
19. Return spring
20. Crip
21. Pinion stepper
22. Pinion
23. Cushion spring
24. Washer
25. Pinion shaft
26. Pinion clutch
27. Gear case

Reassembly steps
To reassemble, follow the disassembly steps in the reverse order.

For disassembling, refer to S25-163C.

6D2-9-1.tif

INSPECTION AND REPAIR

Make the necessary adjustments, repairs, and part replacements if excessive wear or damage is discovered during inspection.

ARMATURE

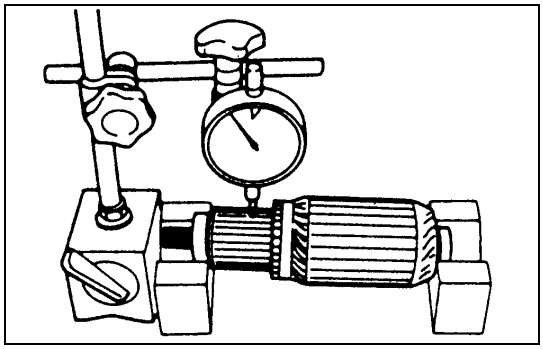

6D2-10-1.tif

1. Measure the commutator run-out.
   Replace the commutator if the measured run-out exceeds the specified limit.

Commutator Run-Out mm (in)

Standard	Limit
0.05 (0.002) or less	0.2 (0.008)

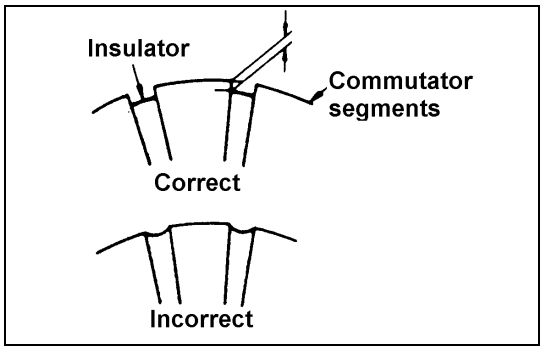

6D2-10-2.tif

2. Check the commutator mica segments for excessive wear.
3. Measure the mica segment depth.

Mica Segment Depth mm (in)

Standard	Limit
0.5 - 0.8 (0.020 - 0.031)	0.2 (0.008)

If the mica segment depth is less than the standard but more than the limit, the commutator may be reground.

If the mica segment depth is less than the limit, the commutator must be replaced.

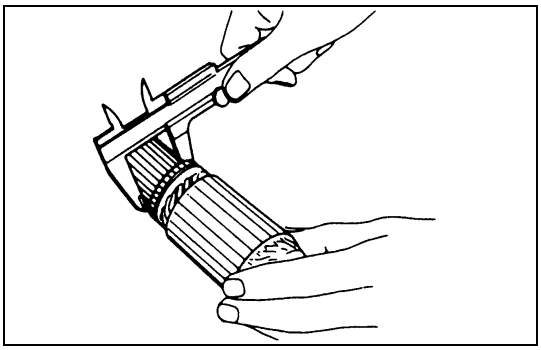

6D2-10-3.tif

4. Measure the commutator outside diameter.

Commutator Outside Diameter mm (in)

Model	Yoke Diameter	Standard	Limit
S25-163C	ø80	36.5 (1.437)	35.5 (1.398)
S25-305C	ø90	38.0 (1.496)	36.6 (1.441)

If the measured outside diameter is less than the specified limit, the commutator must be replaced.

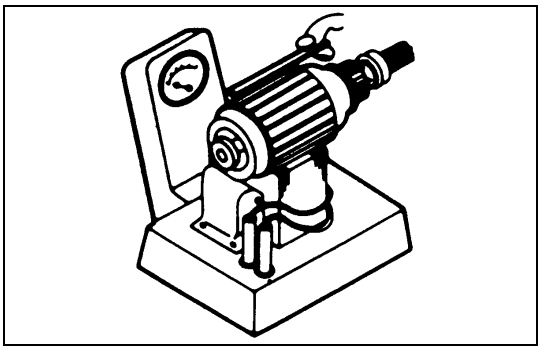

6D2-10-4.tif

5. Test the armature for short circuiting.
   a. Place the armature in a growler tester.
   b. Hold a hacksaw blade against the armature core.
      If the armature has a short circuit, the hacksaw blade will vibrate.
      Replace the armature if there is a short circuit.

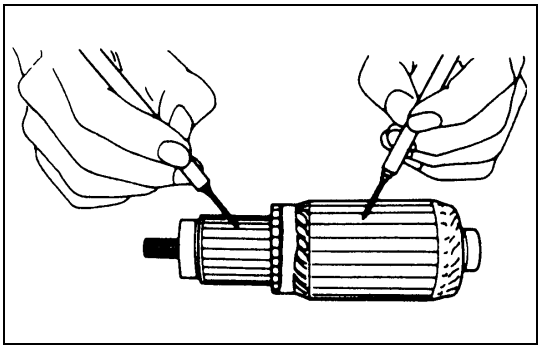

6D2-11-1.tif

6. Use a circuit tester to check the armature for grounding.
   1) Hold one probe of the circuit tester against the commutator segment.
   2) Hold the other circuit tester probe against the armature core.

   If the circuit tester indicates continuity, the armature is grounded.

   The armature must be replaced.

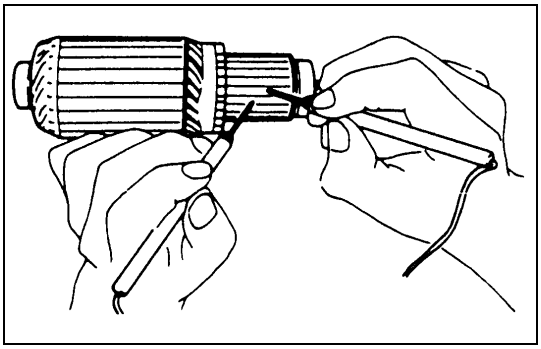

6D2-11-2.tif

7. Use the circuit tester to check the armature for continuity.
   1) Hold the circuit tester probes against two armature core segments.
   2) Repeat Step 1 at different segments of the armature core.

   There should be continuity between all segments of the armature core.

   If there is not, the armature must be replaced.

YOKE

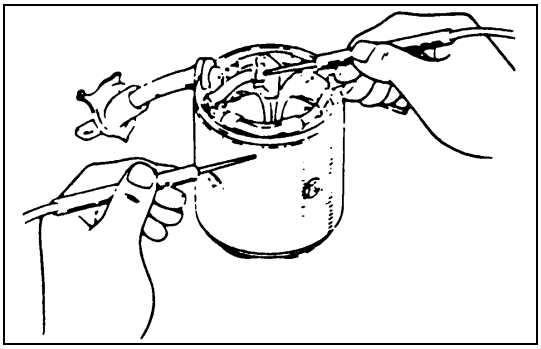

6D2-11-3.tif

1. Use a circuit tester to check the field winding ground.
   1) Hold one circuit tester probe against the field winding end or brush.
   2) Hold the other circuit tester probe against the bare surface of the yoke body.

   There should be no continuity.

   If there is continuity, the field coil is grounded.

   The yoke must be replaced.

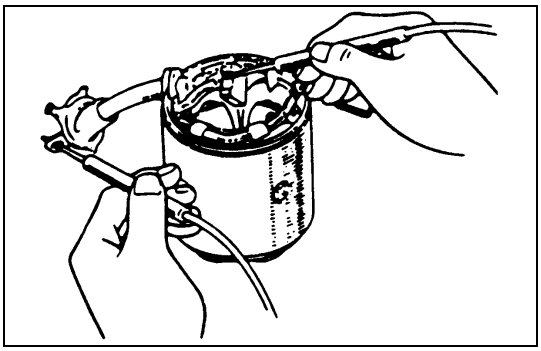

6D2-11-4.tif

2. Use the circuit tester to check the field winding continuity.
   1) Hold one circuit tester probe against the “C” terminal lead wire.
   2) Hold the other circuit tester probe against the field winding brush.

   There should be continuity.

   If there is no continuity, the yoke must be replaced.

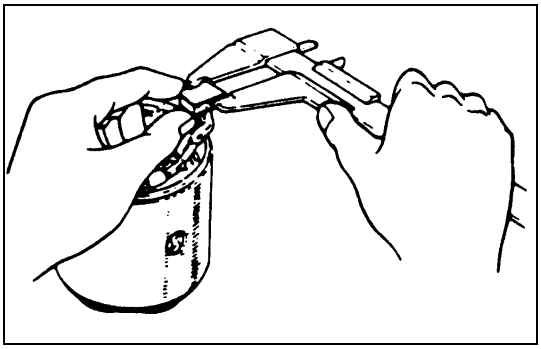

6D2-12-1.tif

BRUSH AND BRUSH HOLDER

1. Use a vernier caliper to measure the brush length (four brushes).

   Replace the brushes as a set if one or more of the brush length is less than the specified limit.

Brush Length mm (in)

Model	Yoke Diameter	Standard	Limit
S25-168	ø80	15.0 (0.591)	10.5 (0.413)
S25-305	ø90	18.0 (0.709)	11.0 (0.433)

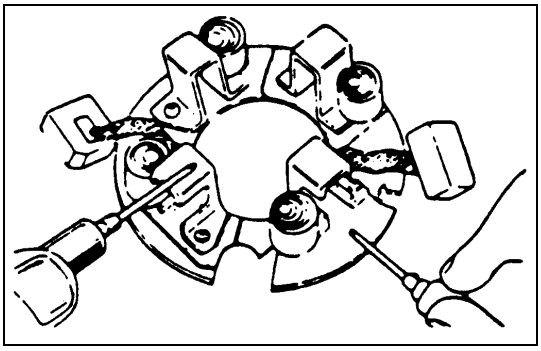

6D2-12-2.tif

2. Use a circuit tester to check the brush holder insulation.

   Touch one probe to the holder plate and the other probe to the positive brush holder.

   There should be no continuity.

3. Inspect the brushes for excessive wear.

   If the negative brushes have excessive wear, the entire brush holder assembly must be replaced.

   If the positive brushes have excessive wear, only the brushes must be replaced.

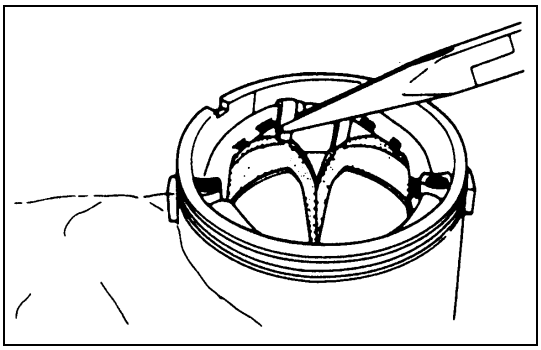

6D2-12-3.tif

1) Use a pair of side cutters to cut the lead wire from the brush.
2) File away any foreign material clinging to the edge of the lead wire.
3) Remove the brushes from the brush holder.
4) Install the new brushes.

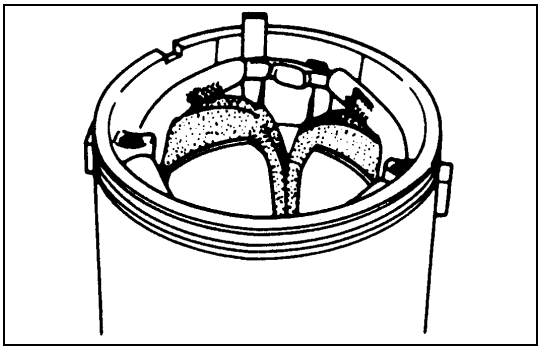

6D2-12-4.tif

5) Straighten the bent portion of the clip.
6) File away any foreign material clinging to the clip surface.

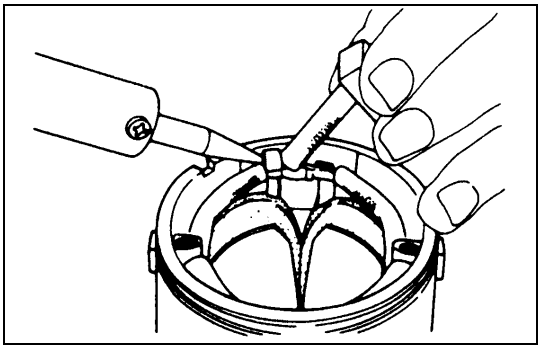

6D2-13-1.tif

7) Place the lead wire in the clip.
8) Bend the clip shut.
9) Solder the brush lead.
10) Repeat the procedure for each of the brushes.

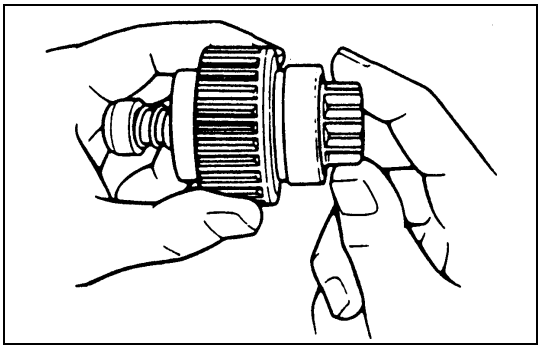

6D2-13-2.tif

OVERRUNNING CLUTCH

1. Inspect the overrunning clutch gear teeth for excessive wear and damage.
   Replace the overrunning clutch if necessary.
2. Rotate the pinion clockwise.
   It should turn smoothly.
3. Try to rotate the pinion in the opposite direction.
   The pinion should lock.

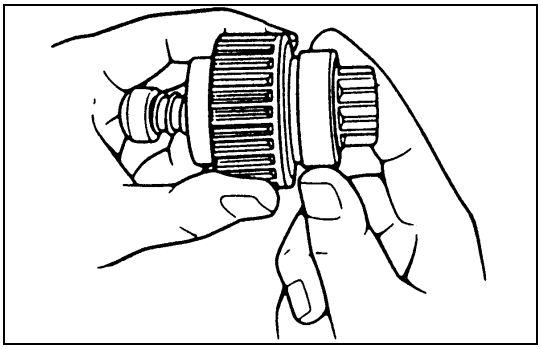

6D2-13-3.tif

BALL BEARING

Inspect the bearings for excessive wear and damage.
Replace the bearings if necessary.

MAGNETIC SWITCH

The following tests must be performed with the starter motor fully assembled.
The yoke lead wire must be disconnected from the “C” terminal.
To prevent coil burning, complete each test as quickly as possible (within three to five seconds).

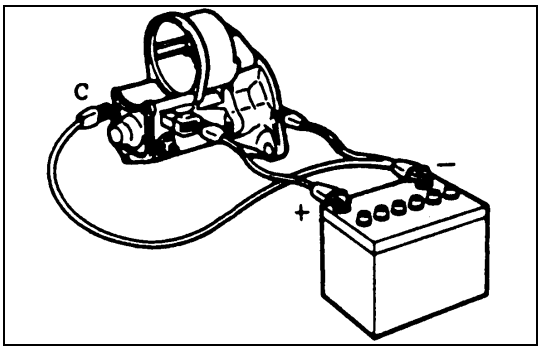

6D2-13-4.tif

Temporarily connect the magnetic switch between the clutch and the housing and run the following test.
Complete each test within three to five seconds.

1. Pull-Out Test

Connect the battery negative terminal with the magnetic switch body and the C terminal. When current is applied to the 50 terminal from the battery positive terminal, the pinion should flutter.

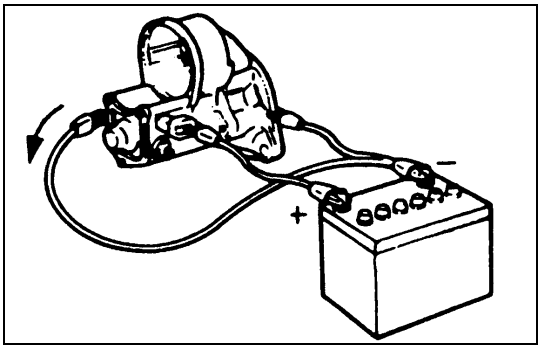

6D2-14-1.tif

2. Hold-in Maintenance Test

Disconnect the lead at the C terminal. The pinion should continue to flutter.

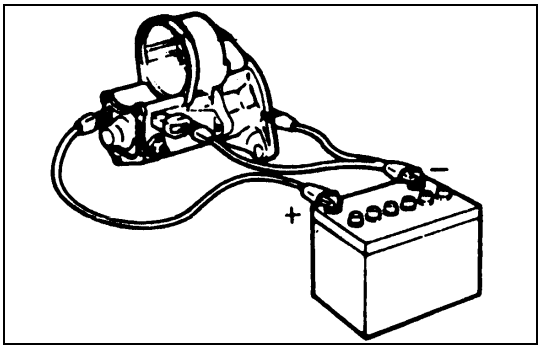

6D2-14-2.tif

3. Return Test

Connect the battery negative leads to the starter body and the 50 terminal.

Connect the battery positive lead at the C terminal.

The pinion should return to its home position.

REASSEMBLY

S25-168

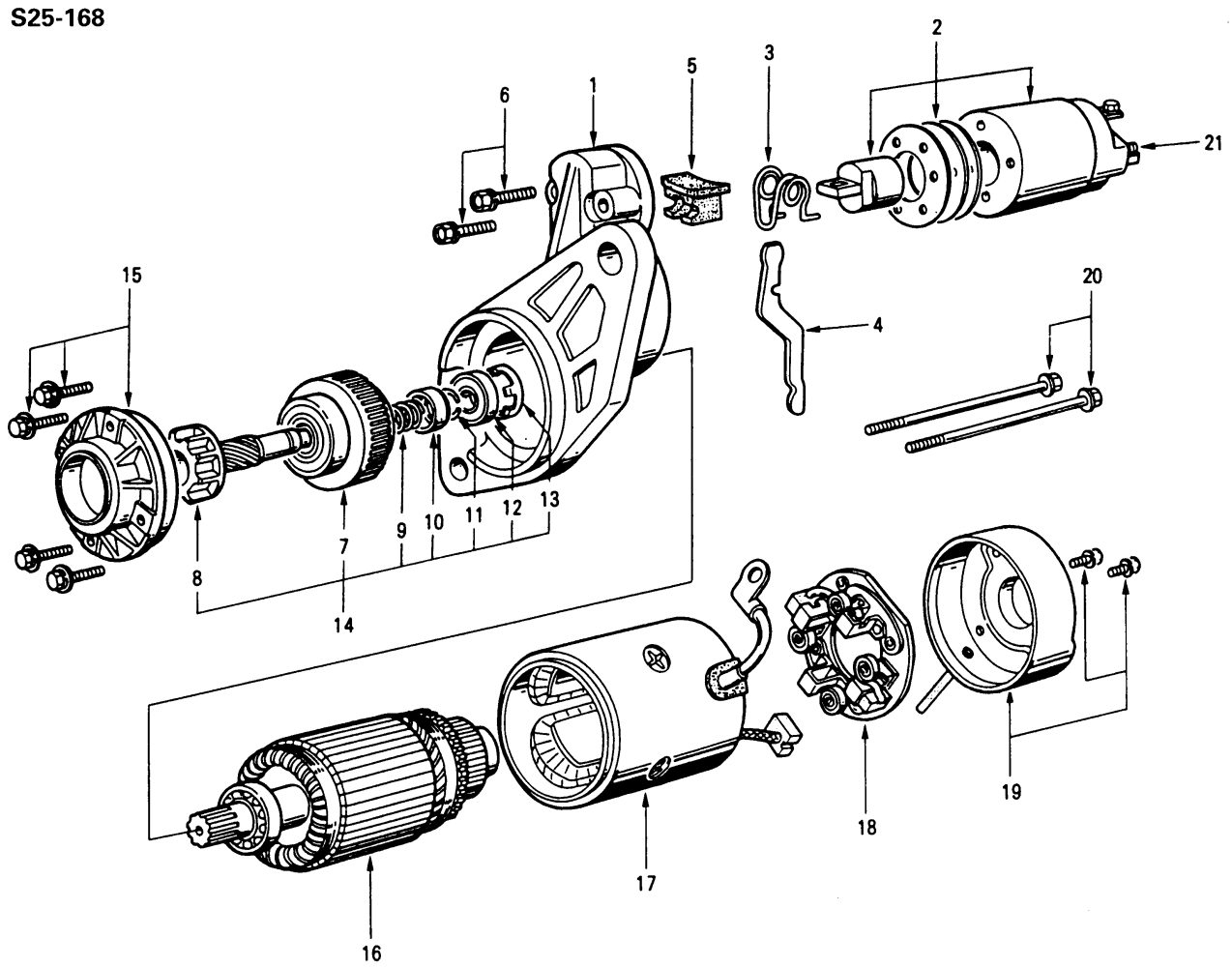

Reassembly Steps

1. Gear case
2. Magnetic switch assembly
3. Torsion spring
4. Shift lever
5. Dust cover
6. Bolt
7. Pinion clutch
8. Pinion shaft
9. Return spring
10. Pinion stopper
11. Pinion stopper crip
12. Ball bearing
13. Bearing holder
14. Clutch assembly
15. Bearing retainer
16. Armature
17. Yoke
18. Brush holder
19. Rear cover
20. Through bolt
21. Lead wire nut

6D2-15-1.tif

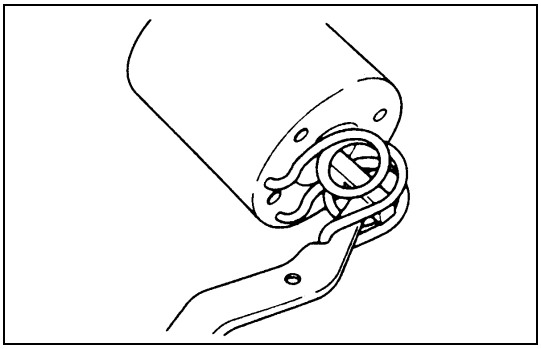

6D2-16-1.tif

REASSEMBLY

1. **Gear Case**
2. **Magnetic Switch Assembly**
3. **Torsion Spring**
4. **Shift Lever**
   1) Attach the torsion spring to the hole in the magnetic switch as illustrated.
   2) Insert the shift lever into the plunger hole of the magnetic switch.

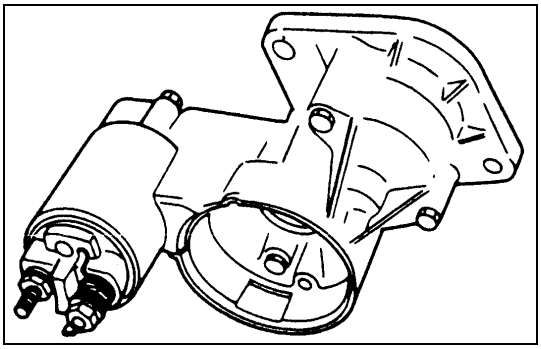

6D2-16-2.tif

5. **Dust Cover**
   Install the dust cover.
6. **Bolt**
   Install the magnetic switch assembly in the gear case and tighten the bolt to the specified torque.

Gear Case Bolt Torque	N·m (kg·m/lb·in)
8 (0.8/69)	

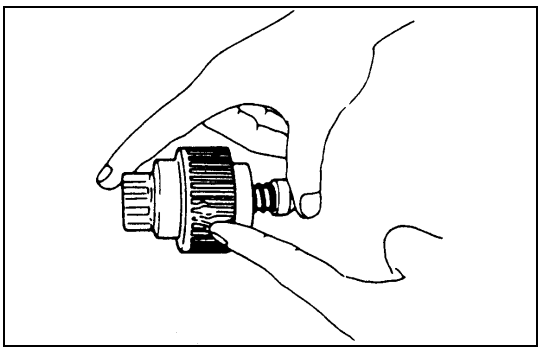

6D2-16-3.tif

7. **Pinion Clutch**
8. **Pinion Shaft**
   Apply a coat of grease to the pinion clutch gear and install the pinion assembly to the armature shaft.
9. **Return Spring**
10. **Pinion Stopper**
11. **Pinion Stopper Clip**

12. **Ball Bearing**
13. **Bearing Holder**
14. **Clutch Assembly**
15. **Bearing Retainer**
16. **Armature**
17. **Yoke**

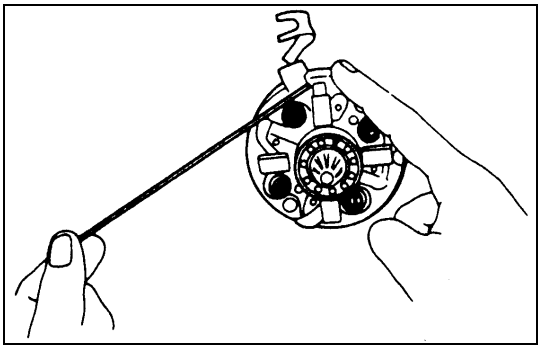

6D2-16-4.tif

21. **Brush Holder**
    1) Twist the holder spring and hold it.
    2) Install the brush to the brush holder.
    3) Repeat step 1 and 2 for the reaming holders.

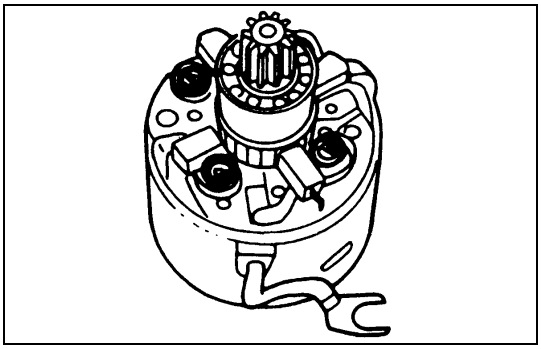

6D2-17-1.tif

4) Install the brush holder assembly to the yoke.
   Take care not to damage the commutator face and the brushes.

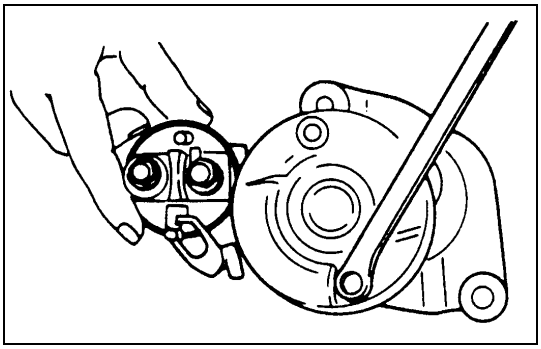

6D2-17-2.tif

19. Rear Cover

20. Through Bolt

Install the through bolts in the rear cover and tighten them to the specified torque.

Through Bolt Torque	N·m (kg·m/lb·in)
6 (0.6/52)	

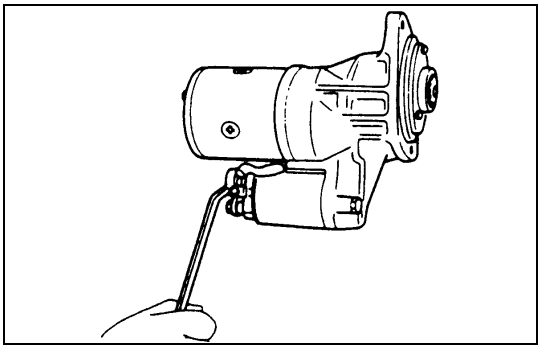

6D2-17-3.tif

21. Lead Wire Nut

Connect the lead wire in the magnetic switch and tighten the terminal nut to the specified torque.

Lead Wire Terminal Nut Torque	N·m (kg·m/lb·in)
10 (1.0/87)	

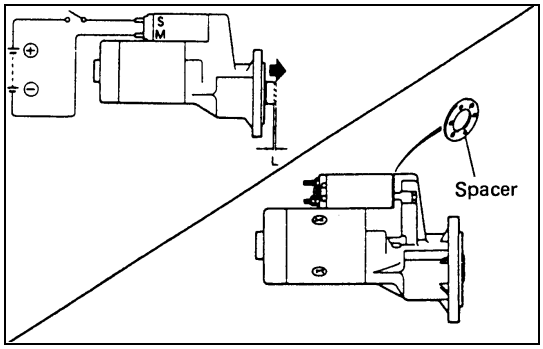

6D2-17-4.tif

Pinion Jump-out dimension

- Connect the (+) cable of battery to terminal S and the (-) cable to terminal M. Turn the switch on, and measure pinion travel dimension “L” in thrust direction from the jump-out position.

In measuring the dimension, pull the pinion out a little in the arrow direction.

mm (in)

Dimension	Standard
L	0.3 - 0.1 (0.01 - 0.004)

If the measured value is out of standard, adjust the of shims.

S25-305A

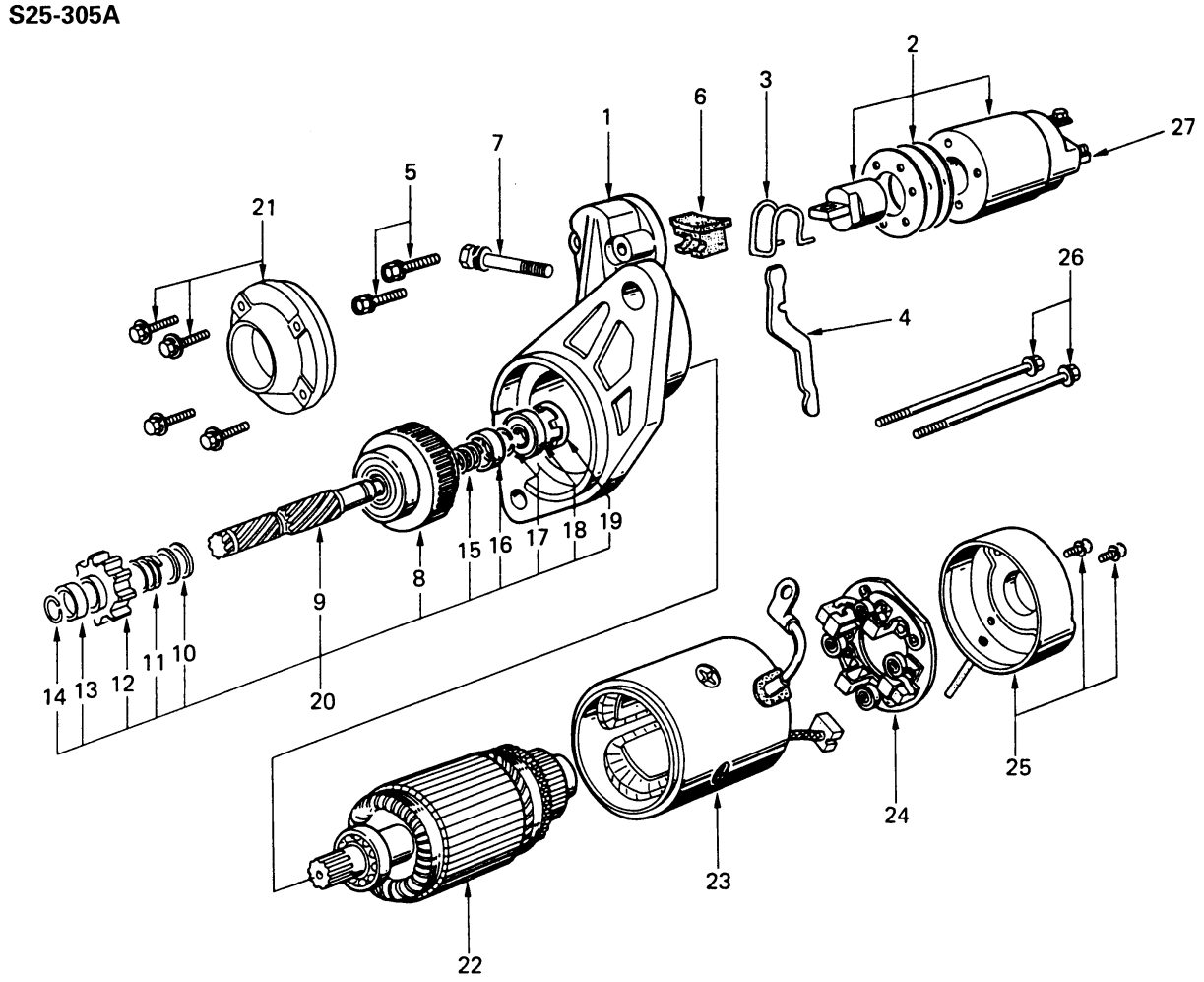

Reassembly Steps

1. Gear case
2. magnetic switch assembly
3. Torsion spring
4. Shift lever
5. Bolt
6. Dust cover
7. Bolt
8. Pinion clutch
9. Pinion shaft
10. Washer
11. Cushion spring
12. Pinion
13. Pinion stopper
14. Clip
15. Return spring
16. Pinion stopper
17. Pinion stopper clip
18. Ball bearing
19. Bearing holder
20. Clutch assembly
21. Bearing retainer
22. Armature
23. Yoke
24. Brush holder
25. Rear cover
26. Through bolt
27. Lead wire nut

6D2-18-1.tif

REASSEMBLY

For reassembly, refer to S25-168.

SECTION 6D3
CHARGING SYSTEM

CONTENTS

	PAGE
General Description	6D3 - 1
Diagnosis	6D3 - 3
On-Vehicle Service	6D3 - 4
Unit Repair	6D3 - 7
Reassembly	6D3 - 16

GENERAL DESCRIPTION

The charging system is the IC integral regulator charging system and its main components are connected as shown in Figure.

The regulator is a solid state type and it is mounted along with the brush holder assembly inside the generator installed on the rear end cover.

The generator does not require particular maintenance such as voltage adjustment. The rectifier aconnected to the stator coil has nine diodes to transform A.C. voltage into D.C. voltage. This D.C. voltage is connected to the output terminal of generator.

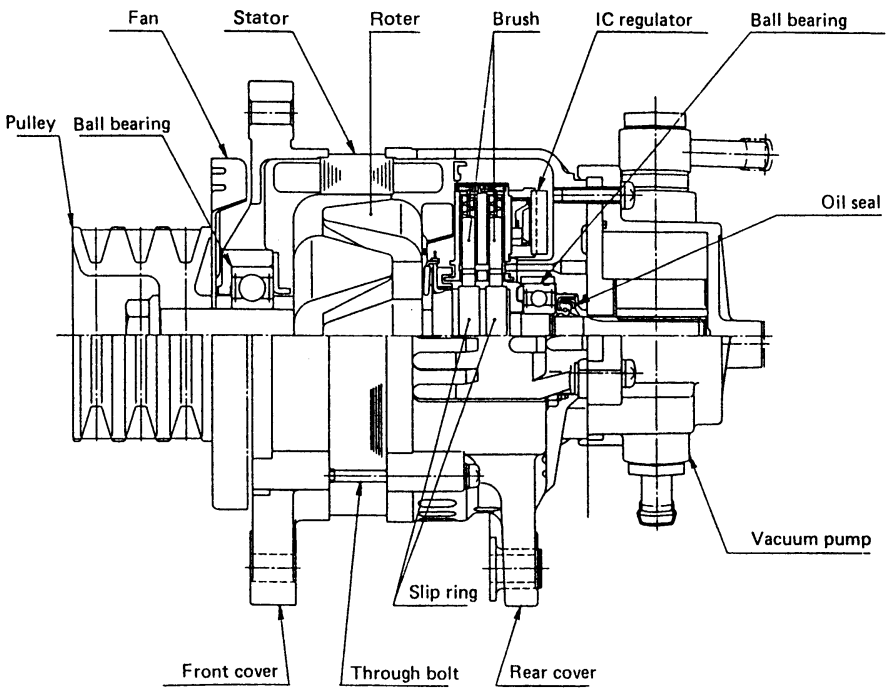

6D3-1-1.tif

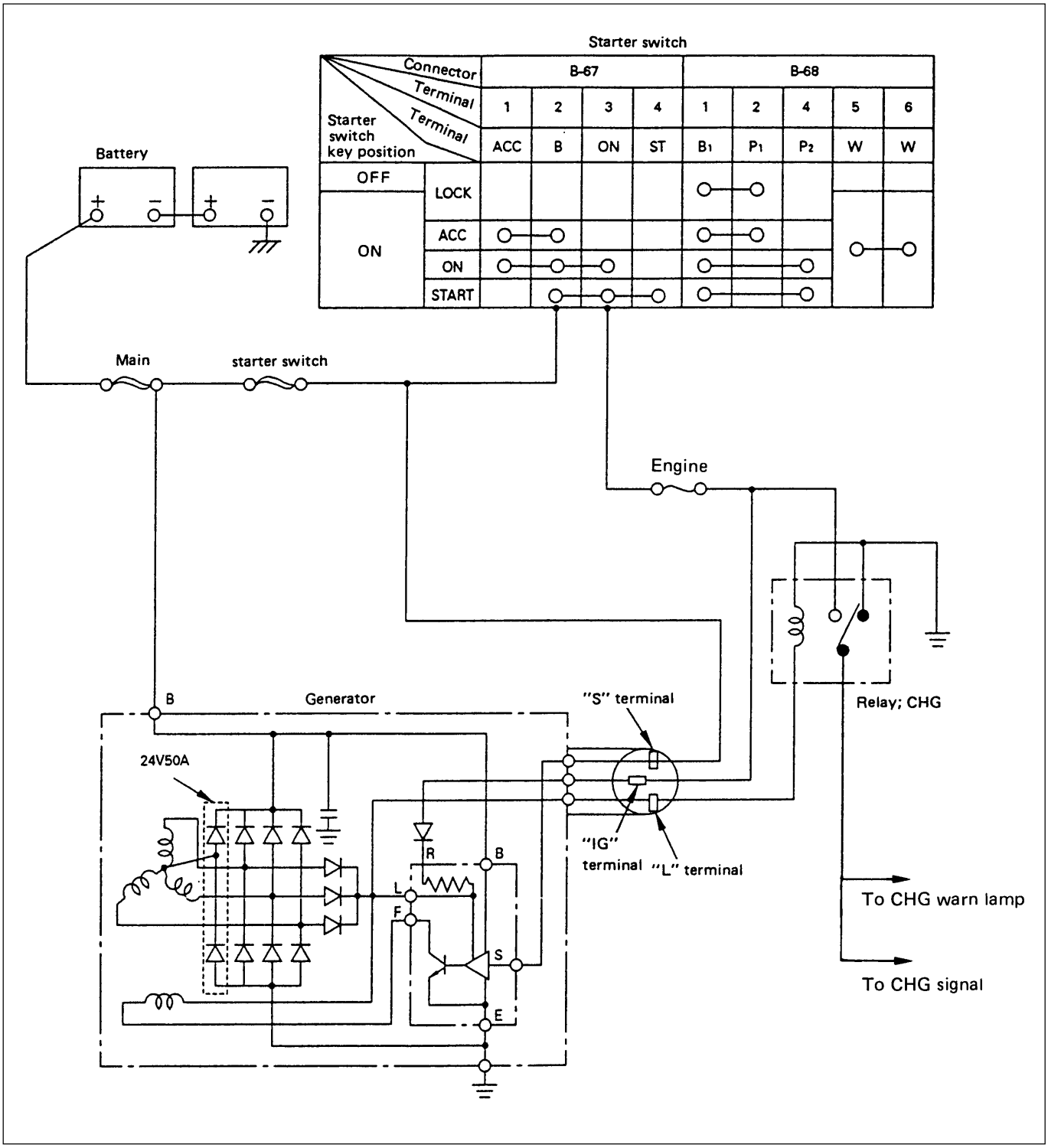
Starter switch
Connector
Terminal
Terminal
Starter switch key position
B-67
B-68
1 2 3 4 1 2 4 5 6
ACC B ON ST B1 P1 P2 W W
OFF
LOCK
ON
ACC
ON
START
Battery
Main
starter switch
Engine
Relay; CHG
B
Generator
"S" terminal
24V50A
R
B
L
F
S
E
"IG" terminal
"L" terminal
To CHG warn lamp
To CHG signal

6D3-2-1.tif

DIAGNOSIS

GENERAL ON-VEHICLE INSPECTION

The operating condition of charging system is indicated by the charge warning lamp. The warning lamp comes on when the starter switch is turned to “ON” position. The charging system operates normally if the lamp goes off when the engine starts. If the warning lamp shows abnormality or if undercharged or overcharged battery condition is suspected, perform diagnosis by checking the charging system as follows:

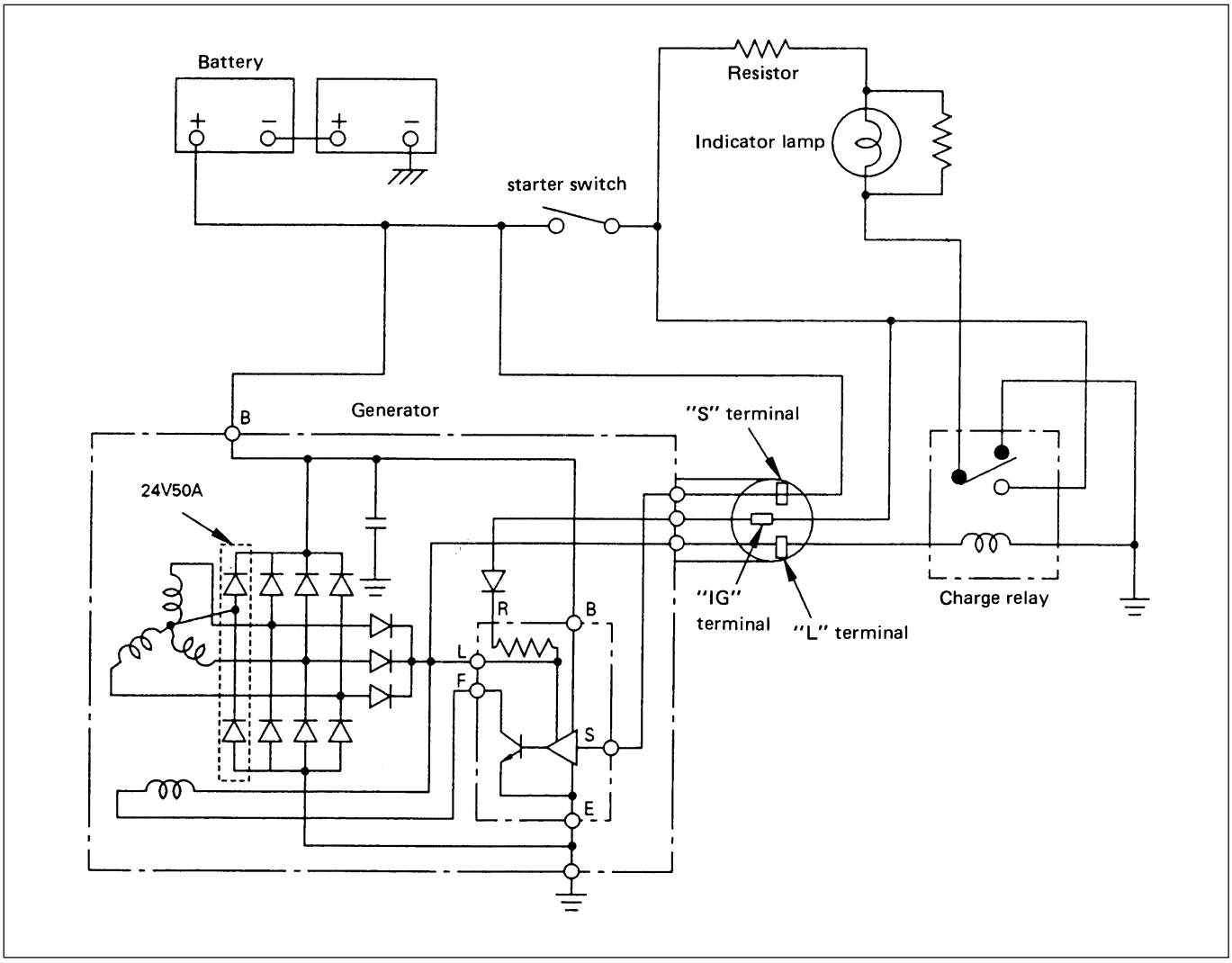

6D3-3-1.tif

1. Check visually the belt and wiring connector.
2. With the engine in stop status, turn the starter switch to “ON” position and observe the warning lamp.
   - If lamp does not come on:
     Disconnect wiring connector from generator, an ground the terminal “L” on connector side.
   - If lamp comes on:
     Repair or replace the generator.

ON-VEHICLE SERVICE

GENERATOR

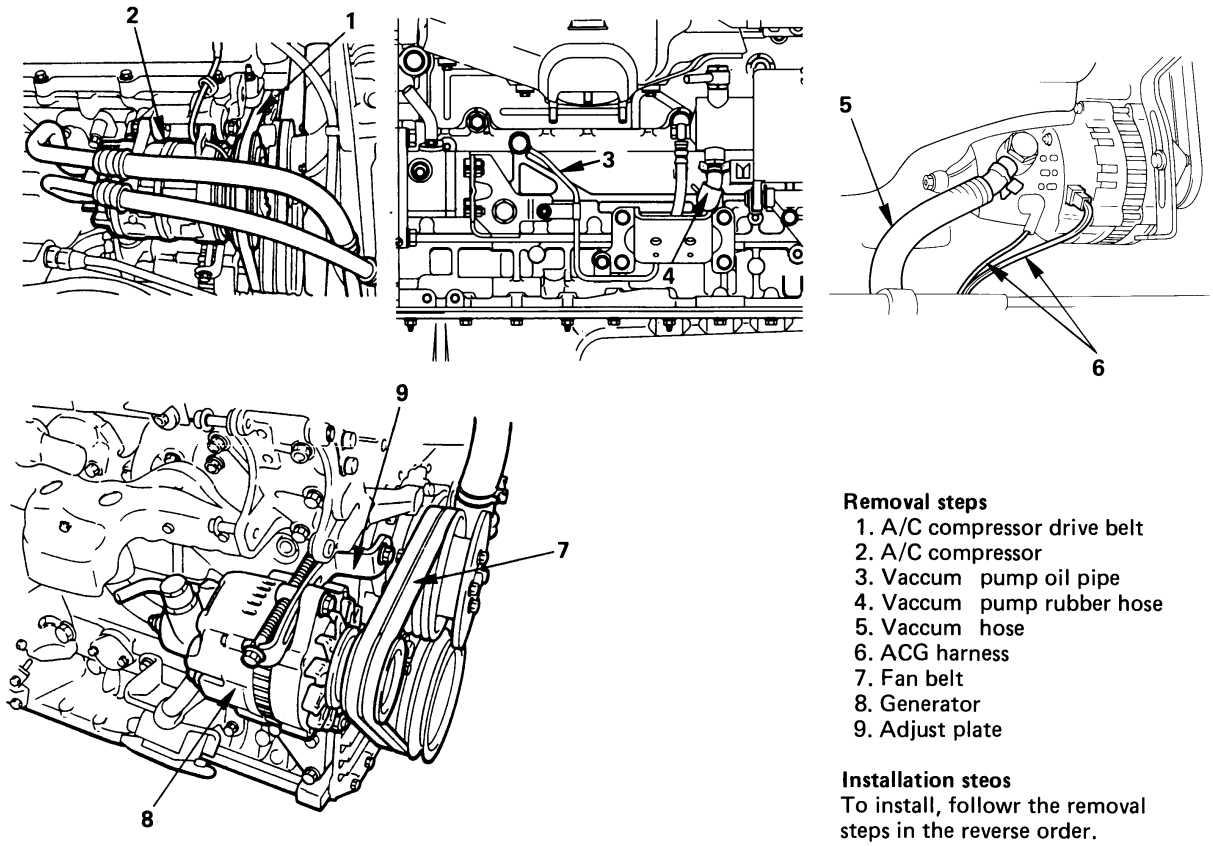

Removal steps
1. A/C compressor drive belt
2. A/C compressor
3. Vaccum pump oil pipe
4. Vaccum pump rubber hose
5. Vaccum hose
6. ACG harness
7. Fan belt
8. Generator
9. Adjust plate

Installation steos
To install, followr the removal steps in the reverse order.

6D3-4-1.tif

REMOVAL

Preparation
- Battery ground cable
- Tilt the cab

1. **A/C Compressor Drive Belt (If equipped with A/C)**
2. **A/C Compressor (If equipped with A/C)**
   - After disconnecting the A/C compressor harness connector, demount the compressor from the A/C compressor bracket and fasten it with a wire to an appropriate location together with the hoses.
3. **Vacuum Pump Oil Pipe**
4. **Vacuum Pump Rubber Hose**
5. **Vacuum Hose**
6. **ACG Harness**
   Disconnect the B terminal cable and harness connector from generator.
7. **Fan Belt**
8. **Generator**
9. **Adjust Plate**

INSTALLATION

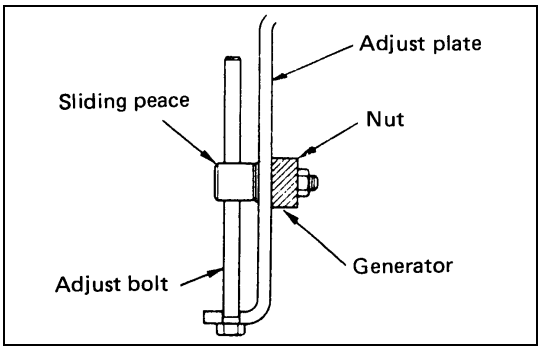

6D3-5-1.tif

9. Adjust Plate

Install the adjust plate as shown in the illustration

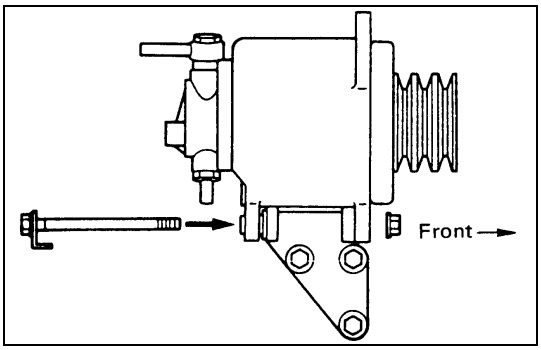

6D3-5-2.tif

8. Generator

Note:

Before tightening the generator, tighten in advance the fan belt temporarily after its adjustment.

- Insert the lower fixing bolt from the rear side as shown in the illustration, and tighten it with a nut on the front side.

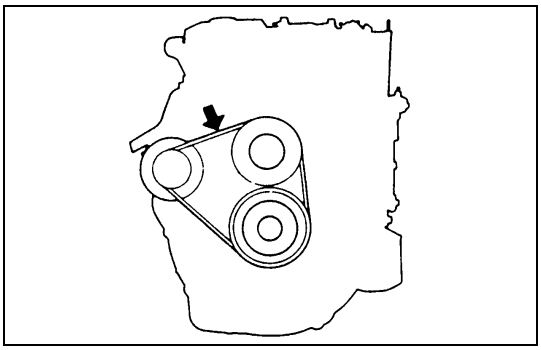

6D3-5-3.tif

7. Fan Belt

Check the drive belt tension.

Depress the drive belt mid-portion with a 10 kg (22 lb/98 N) force.

Drive Belt Deflection	mm (in)
8 - 12 (0.31 - 0.47) ··· New belt 10 - 14 (0.39 - 0.55) ··· Reuse belt	

Check the drive belt for cranking and other damage.

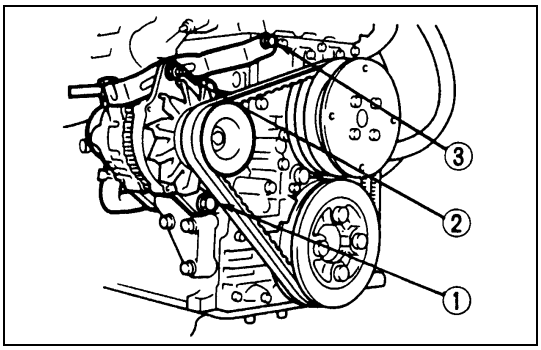

6D3-5-4.tif

Fan Belt Adjustment

Fan belt tension is adjusted by moving the generator.

Torque	N·m (kg·m/lb·ft)
①	40 (4.1/30)
②	24 (2.4/17)
③	46 (4.7/34)

6. ACG Harness

5. Vacuum Hose

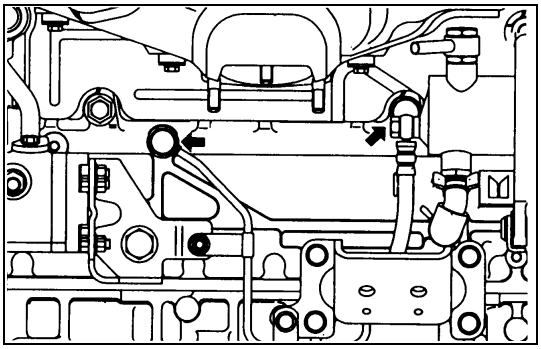

6D3-6-1.tif

4. **Vacuum Pump Rubber Hose**
3. **Vacuum Pump Oil Pipe**

Cylinder Body Side	N·m (kg·m/lb·ft)
41 (4.2/30)	

Generator Side	N·m (kg·m/lb·ft)
23 (2.3/17)	

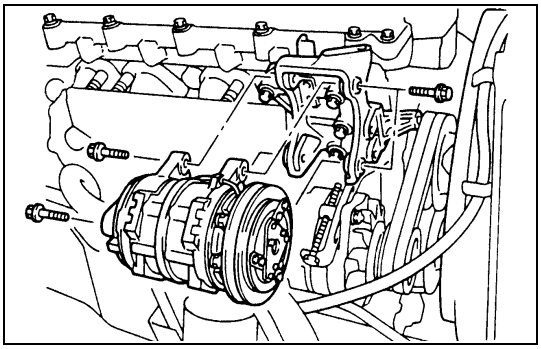

6D3-6-2.tif

2. **A/C Compressor (If equipped with A/C)**
   - Tighten fixing bolts to the specified torque.

A/C Compressor Bolt Torque	N·m (kg·m/lb·ft)
48 (4.9/35)	

Note:
When installing the compressor fixing bolts, tighten first the 2 bolts on the rear side, and then the remaining 2 on the front side.

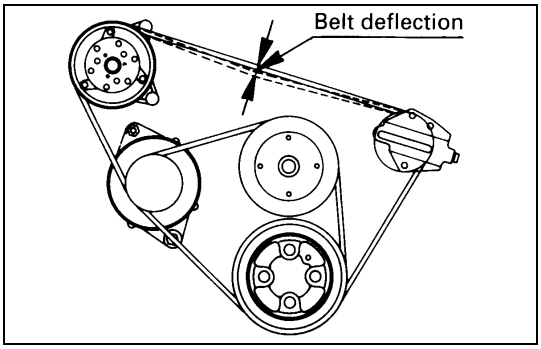

6D3-6-3.tif

1. **A/C Compressor Drive Belt (If equipped with A/C)**
   - Install drive belt adjust belt tension by adjusting bolt and tighten locking nut to the specified torque.
   - Depress the drive belt mid-portion with a 10 kg (22 lb/98 N) force.

Drive Belt Deflection	mm (in)
16 - 20 (0.63 - 0.79) ···New belt 18 - 22 (0.71 - 0.87) ···Reuse belt	

Locking Nut Torque	N·m (kg·m/lb·ft)
27 (2.8/20)	

- Connect the negative battery cable.
- Lower the cab.

UNIT REPAIR

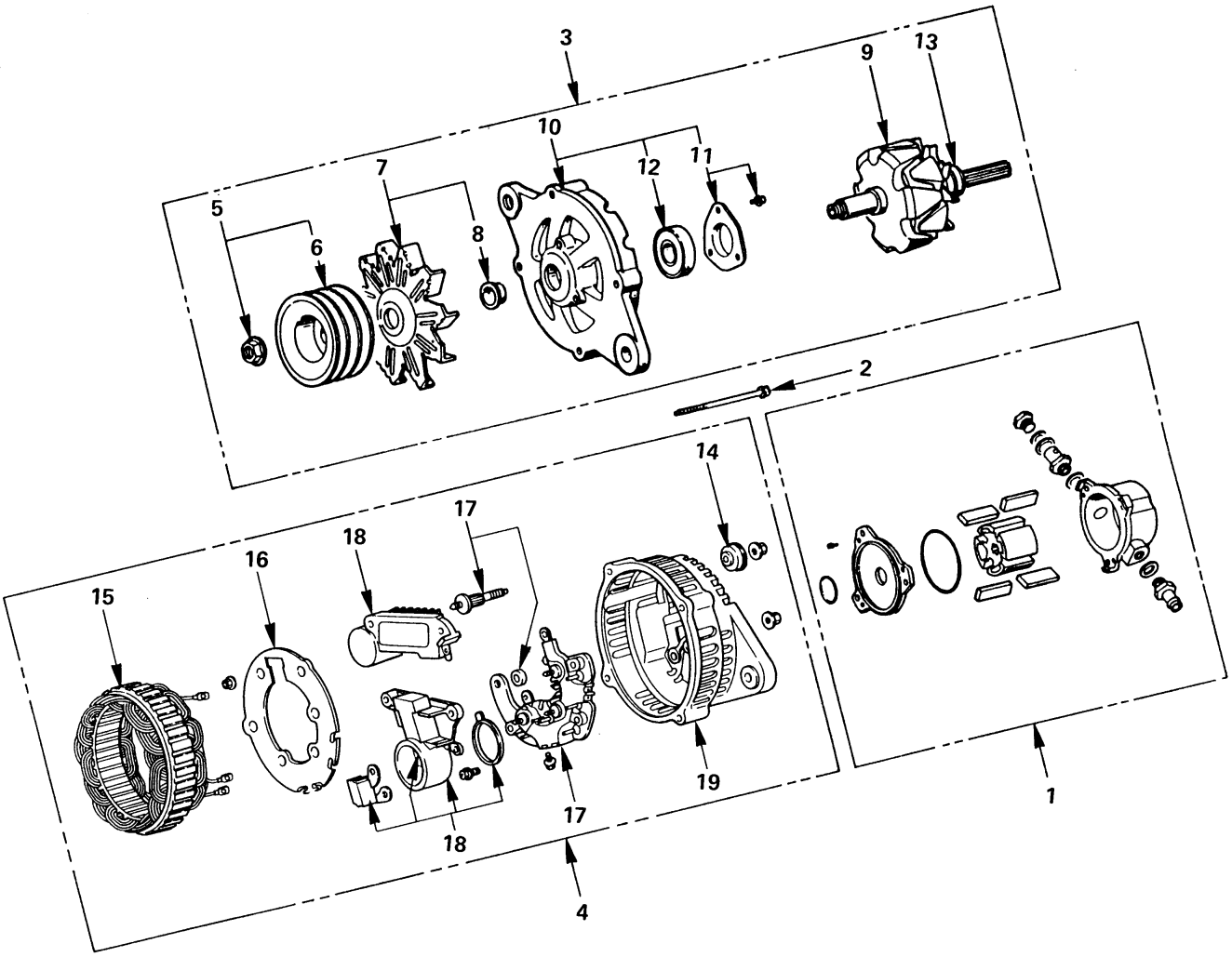

Disassembly Steps

1. Vacuum pump assembly
2. Through bolt
3. Rotor and front cover assembly
4. Stator and rear cover assembly
5. Pulley nut
6. Pulley
7. Fan
8. Spacer
9. Rotor
10. Front cover
11. Bearing retainer
12. Front ball bearing
13. Rear ball bearing
14. Terminal nut and bolt
15. Stator
16. Fan guide
17. Rectifier
18. Brush and IC regulator
19. Rear cover

6D3-7-1.tif

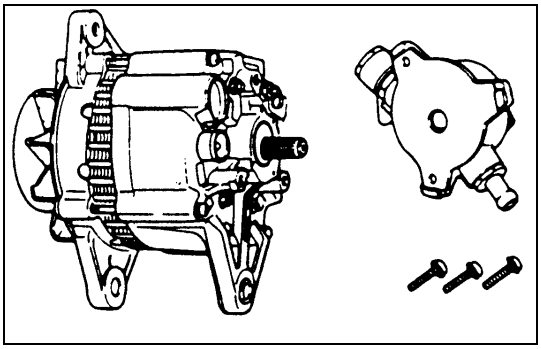

6D3-8-1.tif

DISASSEMBLY

1. Vacuum Pump Assembly

1) Loosen the vacuum pump fixing bolts.
2) Support the vacuum pump center plate.
3) Carefully remove the vacuum pump.

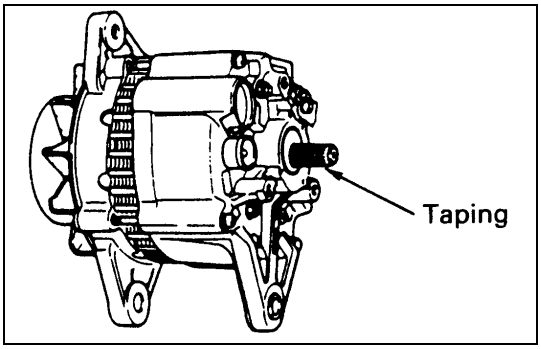

6D3-8-2.tif

2. Through Bolt
3. Rotor and Front Cover Assembly
4. Stator and Rear Cover Assembly

1) Loosen the through bolts.
2) Remove the rotor and front cover assembly from the stator and rear cover assembly.
   Do not allow the stator to separate from the rear cover.
   Take care not to damage the oil seal.
   Tape the rotor splines to protect them from damage.

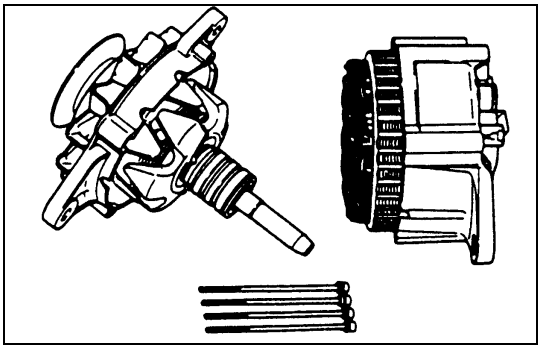

6D3-8-3.tif

5. Pulley Nut
6. Pulley
7. Fan
8. Spacer
9. Rotor

1) Carefully clamp the rotor assembly in a vice.
2) Loosen the pulley nut ①.
3) Remove the pulley ②, the fan ③, the spacer ④, the front cover ⑤ and the rotor ⑥.

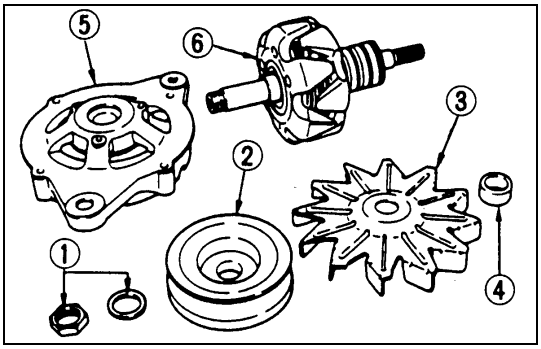

6D3-8-4.tif

10. Front Cover
11. Bearing Retainer
12. Front Ball Bearing
13. Rear Ball Bearing
14. Terminal Nut and Bolt

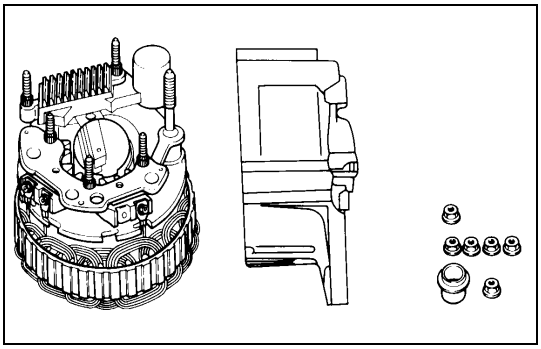

6D3-8-5.tif

15. Stator

1) Loosen the terminal nuts and bolts.
2) Remove the lead wire, the insulators, and the washers.
3) Remove the stator and the IC regulator assembly from the rear cover.

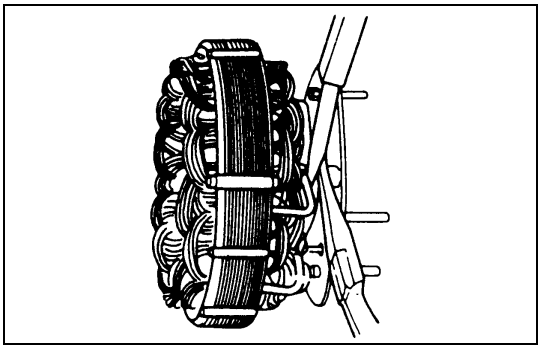

6D3-9-1.tif

16. **Fan guide**
17. **Rectifier**
18. **Brush and IC Regulator**

    Disconnect the stator coil leads between each rectifier and the N-terminal by melting the solder connection.

    NOTE:

    Hold the lead wire between the solder and the rectifier with a pair of long nose pliers.

    This will prevent heat transfer and resultant damage to the rectifier.

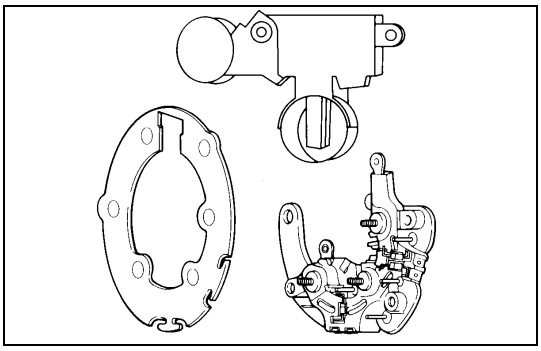

6D3-9-2.tif

Refer to “INSPECTION AND REPAIR” for the IC regulator, the rectifier, the brush holder, and the condenser replacement procedures.

19. **Rear Cover**

INSPECTION AND REPAIR

Make the necessary adjustments, repairs, and part replacements if excessive wear or damage is discovered during inspection.

ROTOR

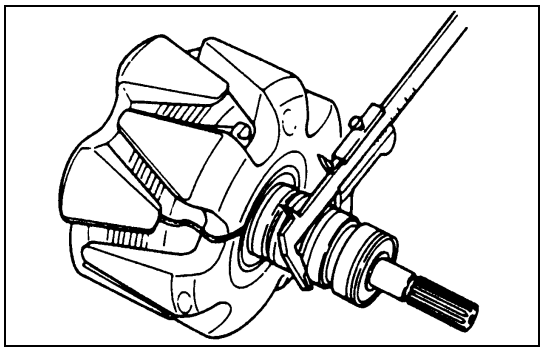

6D3-9-3.tif

1. Inspect the slip ring faces for dirt and pitting.

   Wipe away any dirt with a clean cloth soaked in alcohol.

   Use a hand grinder to remove pitting.

2. Measure the slip ring diameter.

Slip Ring Diameter mm (in)

Standard	Limit
37.6 (1.480)	36.6 (1.441)

If the slip ring diameter is less than the specified limit, the slip rings must be replaced.

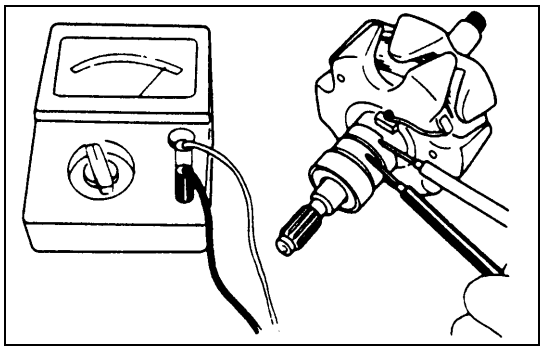

6D3-9-4.tif

3. Measure the rotor coil resistance.

Rotor Coil Resistance at 20°C (68°F) ohms

Standard	12.6

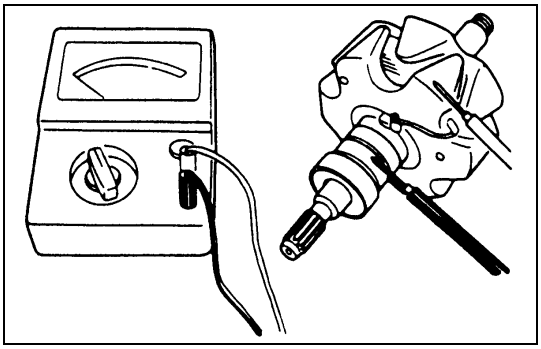

6D3-10-1.tif

4. Check for continuity between the slip rings and the rotor core or shaft.
   If there is continuity, the entire rotor assembly must be replaced.

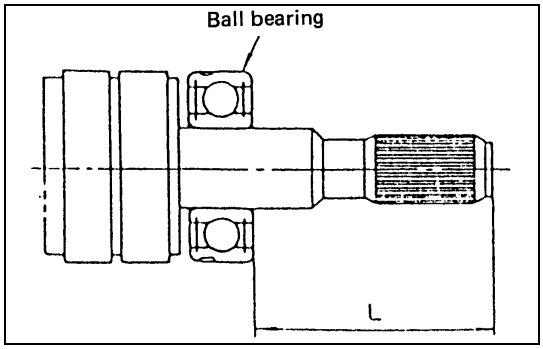

6D3-10-2.tif

5. Rear ball bearing
- Check to see if the ball bearings rotate lightly with no noise heard.
- As the result of inspection, it is found that the ball bearing do not rotate lightly or any noises are heard, replace them with new ones.

Press-in measurement (L) when changing bearings — mm (in)

Standard	58.0 - 58.2 (2.283 - 2.291)

STATOR

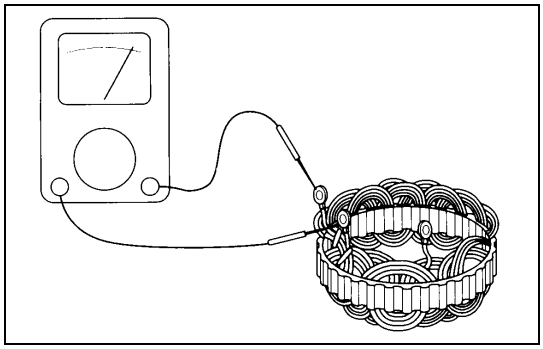

6D3-10-3.tif

1. Check for continuity across the stator coils.
   If there is no continuity, the stator coils must be replaced.

Resistance Between The Coil End “N” And The Each Coil Ends (Reference) — ohms

Standard	0.17

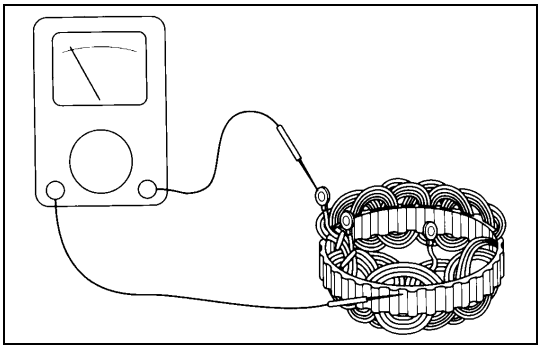

6D3-10-4.tif

2. Check for continuity between each stator coil and the stator core.
   If there is continuity, the stator coils must be replaced.

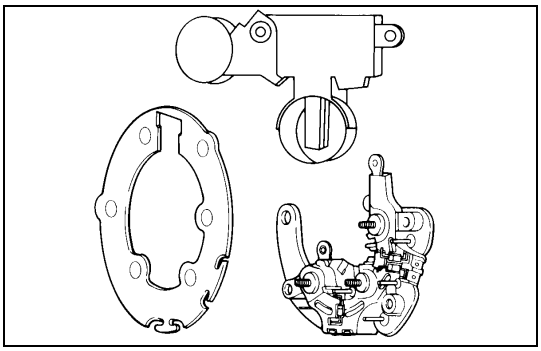

6D3-10-5.tif

RECTIFIER, IC REGULATOR, AND BRUSH HOLDER ASSEMBLY

Disassembly

1. Disconnect the IC regulator and the rectifier by melting the solder connections.
2. Loosen the terminal bolt to remove the rectifier.

3. Disconnect the IC regulator, the brush holder, and the condenser by melting the solder connections.
4. Remove the IC regulator from the terminal plates.
5. Remove the stud bolts from the terminal plate.

NOTE:

If the brushed, brush holder, and the condenser to be reused, do not remove the stud bolts.

6. Remove the brush holder from the terminal plate.

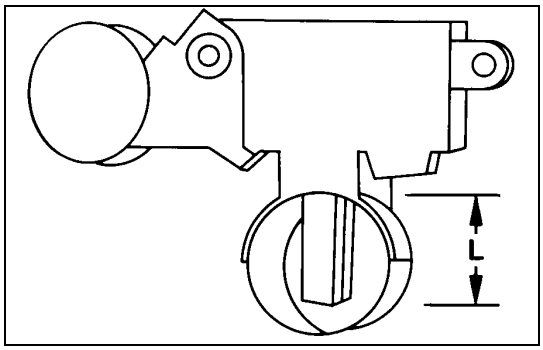

6D3-11-1.tif

Inspection

Brush

Each brush has a line to indicate whether or not the brush is serviceable.

If the line is not visible, the brush must be replaced.

Brush Length (Reference) mm (in)

Standard	Limit
25 (0.984)	6 (0.236)

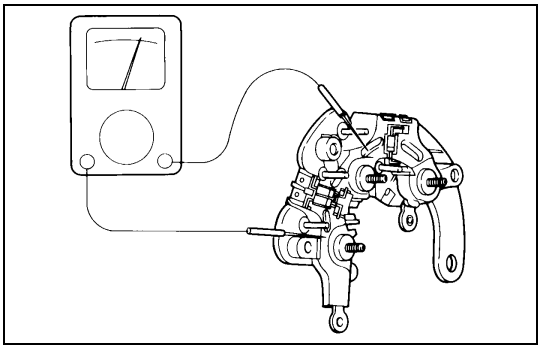

6D3-11-2.tif

Rectifier

1. Check for continuity with a circuit tester between the battery and each of the three stator coil lead terminals.
   If there is continuity from battery to each of the three stator coil lead terminals, the rectifier is normal.
   If there is no continuity, the rectifier must be replaced.
   Check for continuity with a circuit tester between the earth and each of the three stator coil lead terminals.
   If there is continuity from each of the three stator coil lead terminals to earth, the rectifier is normal.
   If there is no continuity, the rectifier must be replaced.

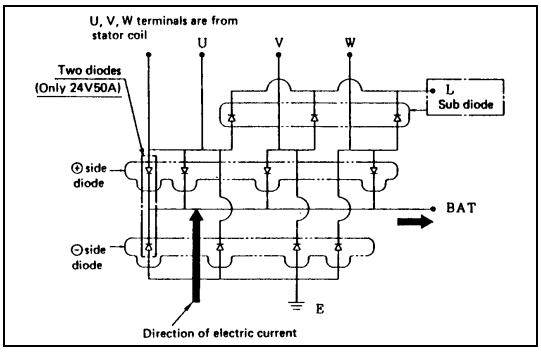

6D3-11-3.tif

2. Reverse the polarity of the test probes.
   If there is no continuity, the rectifier is normal.
   If there is continuity, the rectifier must be replaced.

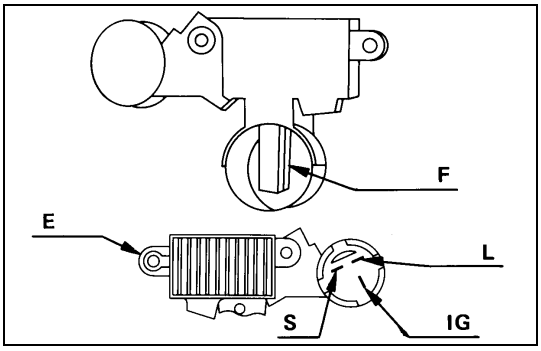

6D3-11-4.tif

IC Regulator

The IC regulator may be tested with either a circuit tester or pair of standard voltmeters.

Refer to the illustration.

① Circuit tester (or voltmeter) range is from 0 to 50 volts in 0.5 volt increments.

② Two twelve volt batteries are required.

③ Note the variable resistor.

④ This resistor is rated at 100 watts/3 ohms.

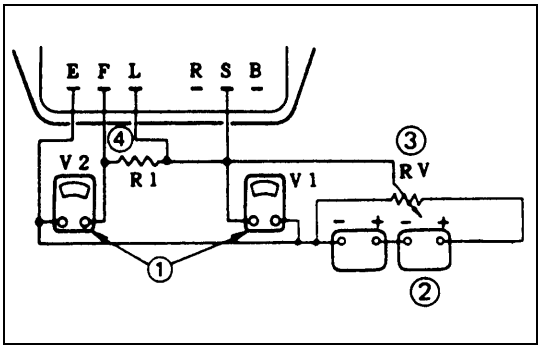

6D3-12-1.tif

Testing the IC Regulator

Refer to the wiring diagram when testing the IC regulator.

1. Connect the batteries in series.
2. Measure the battery power (voltage).

Battery Power	V
28 - 29	

3. Connect the circuit tester ① (or voltmeter V2) as shown in the illustration.
4. Set the variable resistor ③ to zero.
5. Slowly increase the resistance of the variable resistor toward the build-up point.

   Measure the voltage between E and F.

   As long as the resistance is below the build-up point, the voltage reading should be stable and less than two volts.

   When the resistance exceeds the build-up point, the voltage reading should be two volts or greater.

   If the voltage does not exceed two volts after reaching the build-up point, the IC regulator must be replaced.
6. Return the variable resistor ③ to zero.
7. Connect the circuit tester (or voltmeter V1) as shown in the illustration.
8. Measure the voltage at terminals S, L, and E.
9. Slowly increase the resistance of the variable resistor.

   Note the point at which the voltage quickly builds up to between 2 and 6 volts.

   This will indicate the point at which the voltage regulator begins to function.

   If the measured voltage is outside the specified range, the voltage regulator must be replaced.

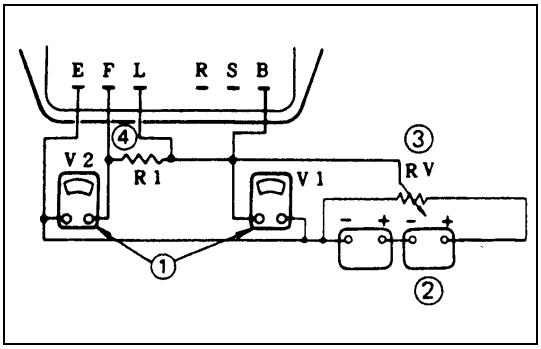

6D3-12-2.tif

10. Repeat Steps 3 through 5 to measure the voltage between terminals B ,L, and E.

    Refer to the wiring diagram.

    The regulator voltage should be between 0.5 and 3 volts higher than the measured voltage.

    If the regulator voltage is outside this range, the voltage regulator must be replaced.

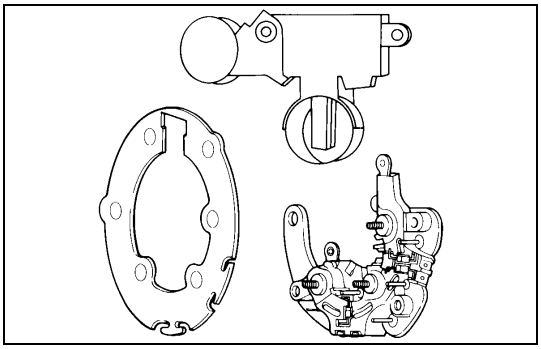

6D3-13-1.tif

Reassembly

1. Install the brush holder and the stud bolts to the terminal plate.
   Check that the stud bolts fit properly.
2. Attach the IC regulator to the terminal plate.
3. Solder the IC regulator, the brush holder and the condenser.
   Take care not to heat the IC regulator.
   Over-heating will resulting damage to the IC regulator.
4. Set the rectifier to the IC regulator assembly.
5. Solder rectifier and IC regulator.
   Take care not to heat the IC regulator.
   Over-heating will resulting damage to the rectifiers and the IC regulator.
6. Tighten the rectifier terminal bolt.

OIL SEAL

Check the rear cover oil seal bore for oil leakage.

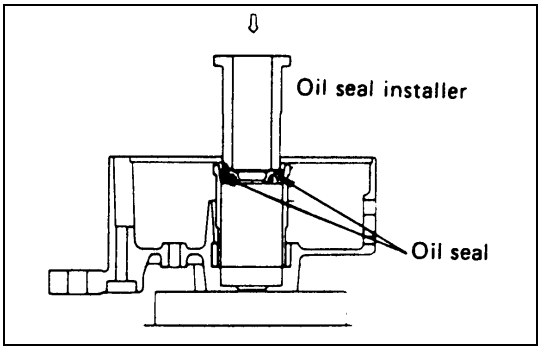

6D3-13-2.tif

Oil Seal Replacement

1. Use a screwdriver to remove the oil seal from the rear cover side.
   Take care not to damage the oil seal bore.
2. Discard the used oil seal.
3. Use the oil seal installer to install the new oil seal.

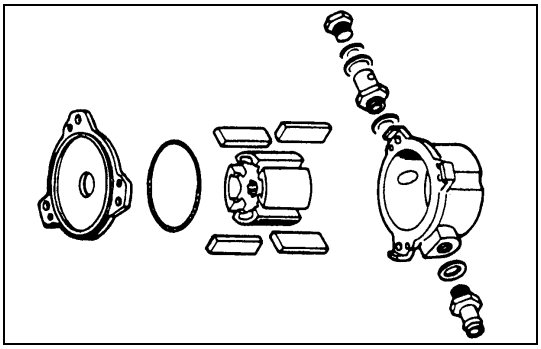

6D3-14-1.tif

VACUUM PUMP

Disassembly

1. Remove the center plate from the vacuum pump housing.
2. Remove the vacuum pump rotor and the vanes from the housing.

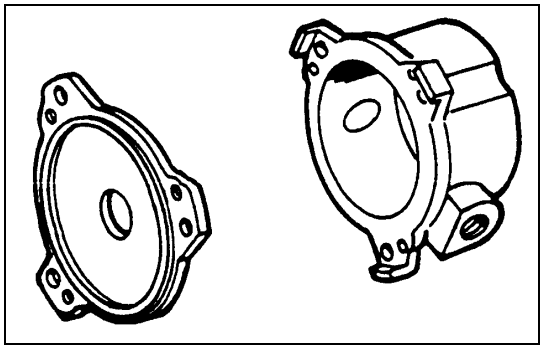

6D3-14-2.tif

Inspection and Repair

Vacuum Pump Housing and Center Plate

Inspect the vacuum pump housing and the center plate for excessive wear, abrasion, and scoring.

If any of these conditions are present, the vacuum pump housing and center plate must be replaced.

Inspect the vacuum pump housing inside for wear and damage.

If the measured inside diameter is outside the specified range, replace the vacuum pump housing.

Vacuum Pump Housing Inside Diameter (Reference) mm (in)

Standard	69.5 - 69.6 (2.736 - 2.740)

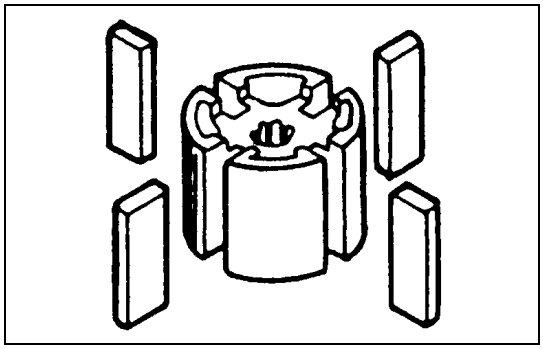

6D3-14-3.tif

Vane

Inspect the vanes for excessive wear and damage.

Replace all four vanes if either of these conditions are present.

Never replace only one vane.

Vane Length (Reference) mm (in)

Standard	18.0 (0.709)

Rotor

1. Inspect the rotor for excessive wear, abrasion, and scoring.

   Pay particular attention to the internal spline.

   Replace the rotor if any of these conditions are present.
2. Inspect the generator rotor shaft splines for backlash.

   Replace the rotor if backlash is present.

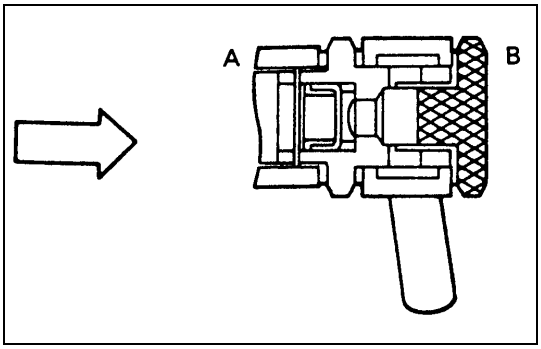

6D3-15-1.tif

Check Valve

1. Carefully force the valve from the “B” side as shown in the illustration.
   The valve must move smoothly.
   If it does not, the check valve must replaced.
2. Apply compressed air to the “A” side.

Air Pressure	kPa (kg/cm^2/psi)
98 - 490 (1 - 5/14.22 - 71.10)	

Check for air leakage from the check valve.
If there is air leakage, the valve must be replaced.

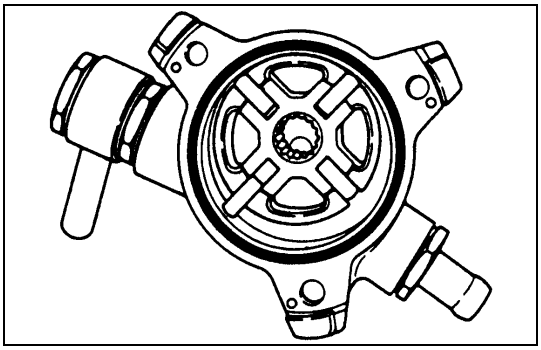

6D3-15-2.tif

Reassembly

1. Install the vanes to the rotor slits.
   The rounded side of the vanes must be facing the rotor housing.

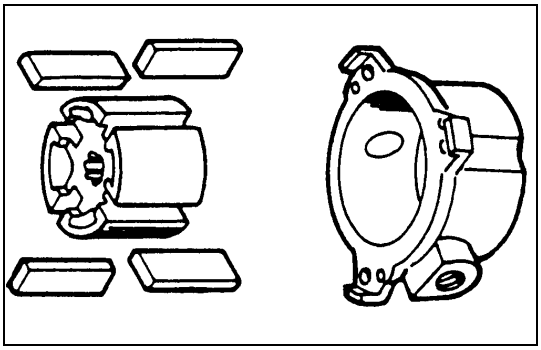

6D3-15-3.tif

2. Install the rotor with the concave side facing the center plate.

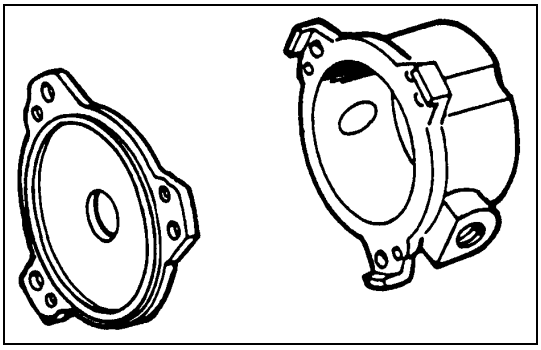

6D3-15-4.tif

3. Install the center plate to the rotor housing.
   Be sure to use a new O-rings.

REASSEMBLY

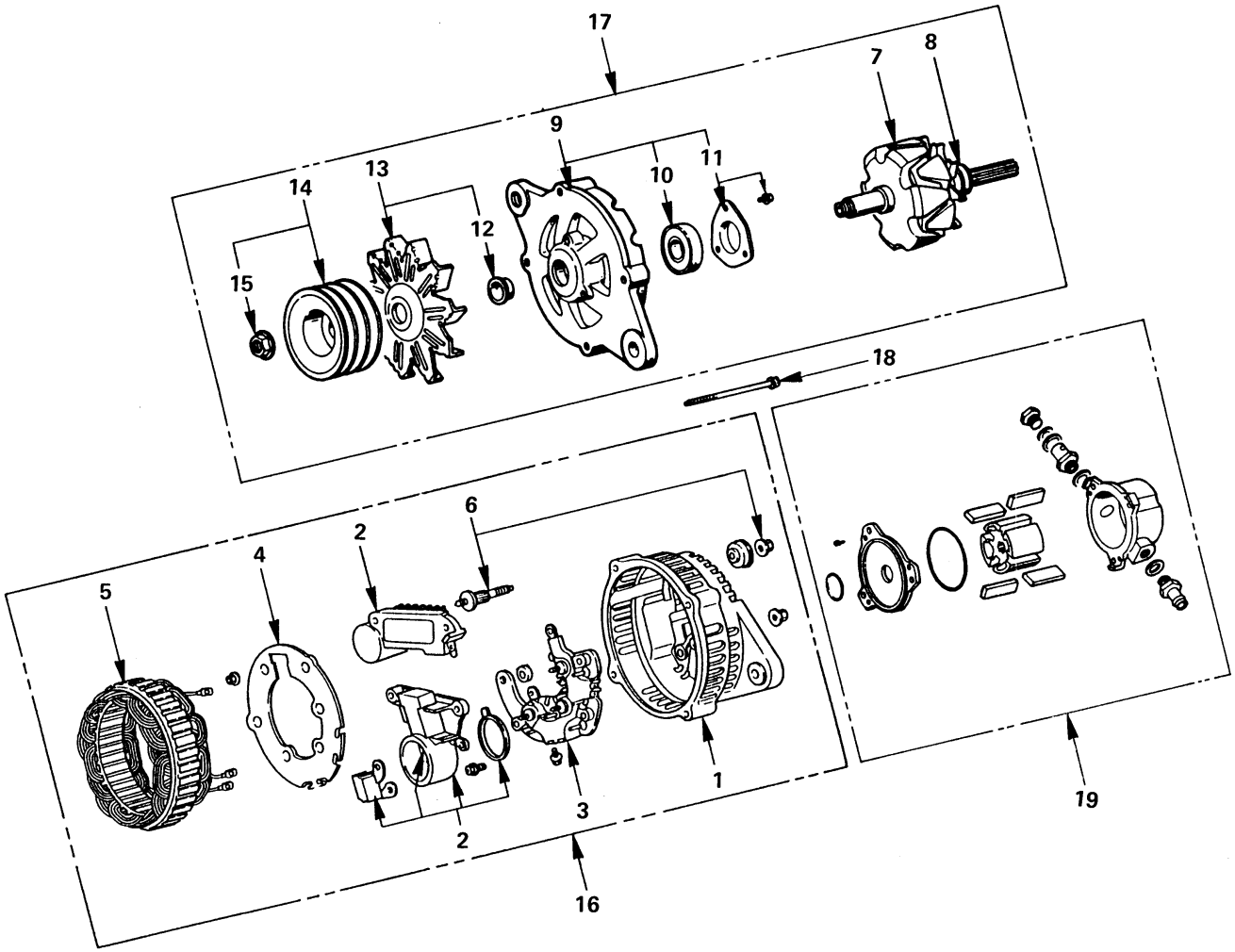

Reassembly Steps

1. Rear cover
2. Brush and IC regulator
3. Rectifier
4. Fan guide
5. Stator
6. Terminal nut and bolt
7. Rotor
8. Rear ball bearing
9. Front cover
10. Front ball bearing
11. Bearing retainer
12. Spacer
13. Fan
14. Pulley
15. Pulley nut
16. Stator and rear cover assembly
17. Rotor and front cover assembly
18. Through bolt
19. Vacuum pump assembly

6D3-16-1.tif

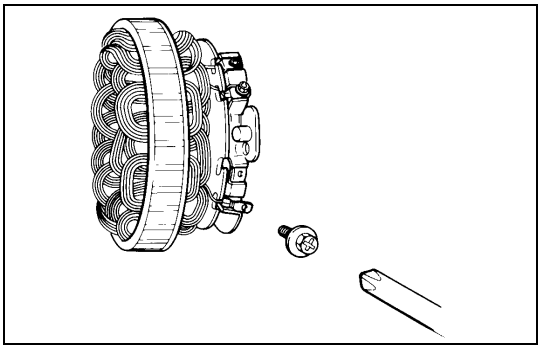

6D3-17-1.tif

REASSEMBLY

1. **Rear Cover**
2. **Brush and IC Regulator**
3. **Rectifier**
4. **Fan Guide**
5. **Stator**
   1) Solder together the rectifier and stator leads.
      Hold the rectifier lead near the rectifier with a pair or long-nose pliers to protect the rectifier from heat.
      Complete the soldering procedure as quickly as possible.
   2) Install the IC regulator/stator assemblies to the rear cover.
      Be absolutely sure that the washers and the insulators are reinstalled to their original positions.
      Hold the stator coil against the rear cover.
6. **Terminal Nut and Bolt**
7. **Rotor**
8. **Rear Ball Bearing**
9. **Front Cover**
10. **Front Ball Bearing**
11. **Bearing Retainer**
12. **Spacer**
13. **Fan**

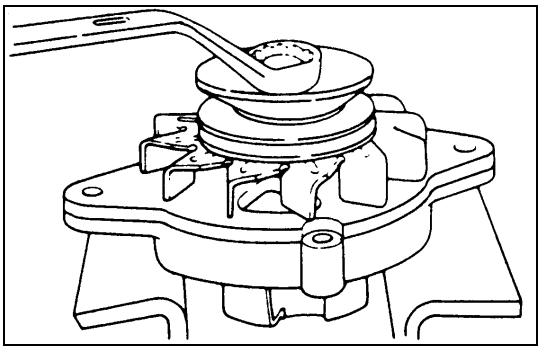

6D3-17-2.tif

14. **Pulley**
15. **Pulley Nut**
    1) Carefully clamp the rotor and cover assembly in a vise.
    2) Install the pulley and the pulley nut.
    3) Tighten the pulley to the specified torque.

Pulley Nut Torque	N·m (kg·m/lb·ft)
98 (10.0/72)	

NOTE:
Take care not to damage the rotor when clamping it in a vise.

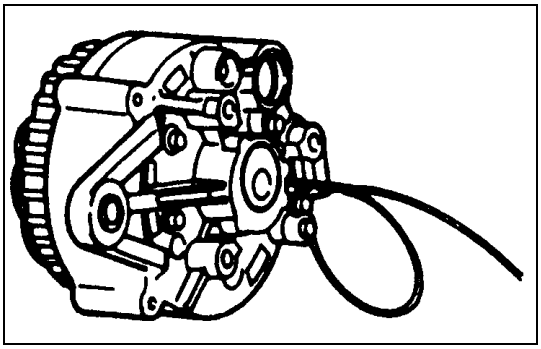

6D3-18-1.tif

16. Stator and Rear Cover Assembly

17. Rotor and Front Cover Assembly

18. Through Bolt

1) Prepare a brush holding wire or a pin.
2) Set the holding wire or the pin to the brushes from the vacuum pump side.

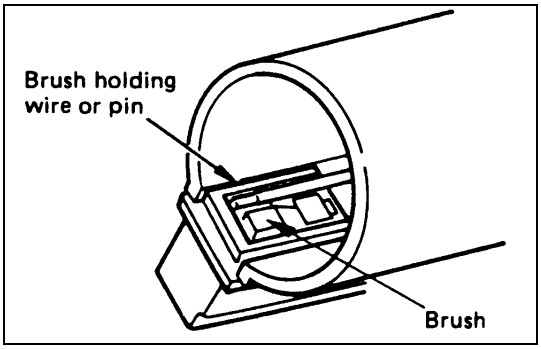

6D3-18-2.tif

3) Push the brushes into the holder.
4) Bend the wire end to hold the brushes.
   If the holding wire does not hold the brushes properly, the brushes will be damaged.

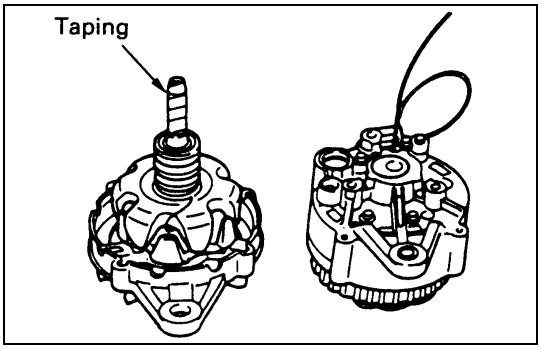

6D3-18-3.tif

5) Tape the rotor shaft spline.
   This will prevent oil seal damaged.

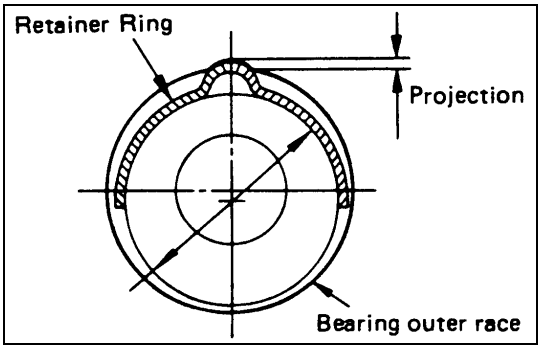

6D3-18-4.tif

6) Place the bearing retainer ring.
   Ring projection must be less than 0.65 mm (0.025 in)

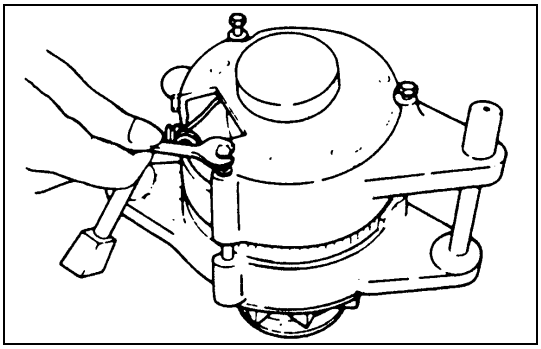

6D3-19-1.tif

7) Install the front cover and rotor assembly to the rear cover.
   Take care not to damage the rotor, the coil leads, the oil seal lip, and the splines.
8) Place the guide bar into the rear cover bracket hole.
   Align the front cover bracket hole with the guide bar.
9) Install the through bolts.
10) Tighten the through bolts to the specified torque.

Through Bolt Torque	N·m (kg·m/lb·in)
4 (0.4/35)	

11) Carefully remove the holding wire from the rear cover.

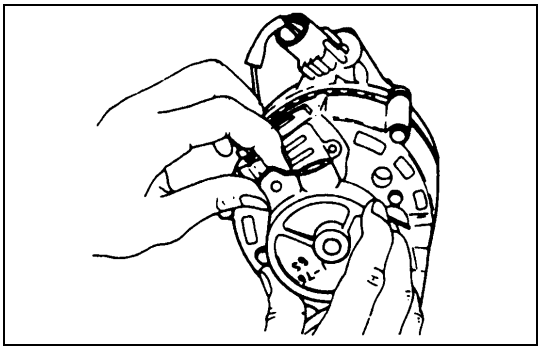

6D3-19-2.tif

19. Vacuum Pump Assembly

1) Position the pump rotor together with the pump housing on the center plate.
   The rotor serrated side must be facing up.
2) Rotate the rotor to align the rotor bore with the center plate bore.
3) Install the housing, the rotor, and the center plate.
   The O-ring must not be projecting beyond the center plate slot.
   Take care not to scratch the vanes.
4) Turn the housing to align it with the center plate.
5) Tighten the vacuum pump fixing bolts.

Vacuum Pump Fixing Bolt Torque	N·m (kg·m/lb·in)
7 (0.7/61)	

6) Add 5cc of engine oil through the filler port.
7) Check that the generator spins smoothly by turning it with your hand.

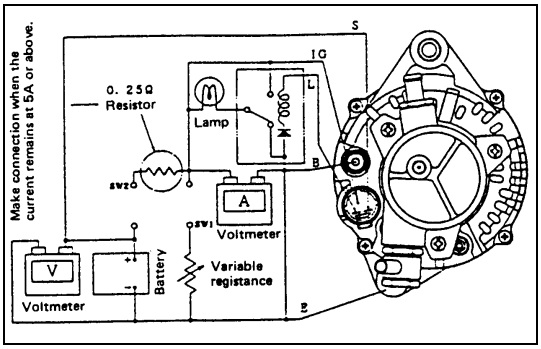

6D3-20-1.tif

Inspection

Performance test

1. **Generator**
   - Connect the generator as shown in the illustration.
   - Use a fully charged battery to conduct the measurement with the current outputted from the battery terminals at 5A or less.

   Note when conducting the performance test:

   For the connection between the generator B terminal and the battery ⊕ terminal and between the E terminal and the battery ⊖ terminal, use a lead wire with a cross section of 8 mm^2 and the length of 2.5 m or less.

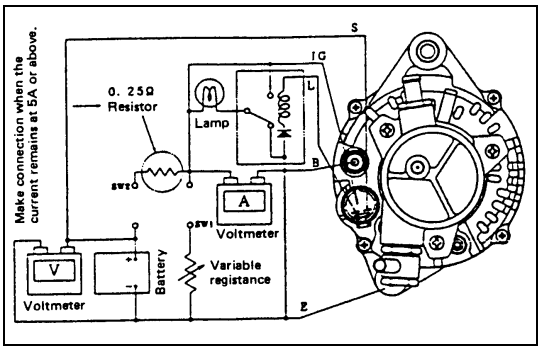

6D3-20-2.tif

2. **Adjusting voltage measurement**
   - Open SW1 and close SW2.
   - With the number of the generator rotations raised up to its rated rotations of 5,000 rpm, measure the adjusting voltage.

   Adjusting voltage = 28 - 29V
   - Check to see if the fluctuation in the adjusting voltage is not caused by the increased number of rotations.
3. **Measurement of the number of rotations at 27V**
   - Open SW1 and close SW2.
   - Increase the number of the generator rotations gradually until the reading of the voltmeter indicates 27V. Measure the number of rotations at this time.

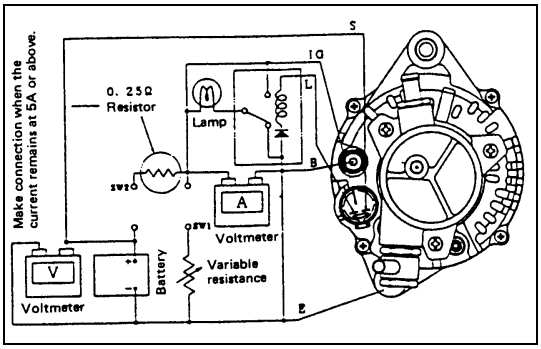

6D3-20-3.tif

4. **Output current measurement**
   - Set the resistance of the variable resistor at the minimum, and rotate the generator with SW1 and SW2 closed.
   - While keeping the voltage steady at 27V after adjusting the variable resistor, read the indicated value of the ammeter at the generator rotation of 5,000 rpm.

   Current at 27V with 5,000 rpm = 35A or more (for 35A specification)

   Current at 27V with 5,000 rpm = 45A or more (for 50A specification)

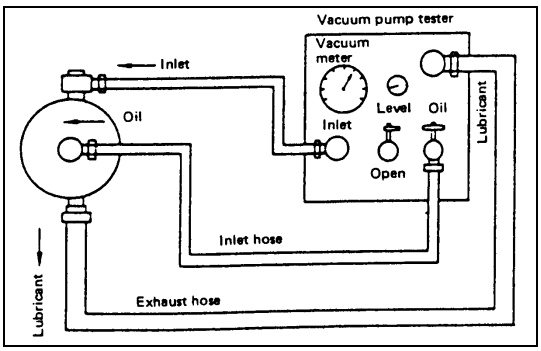

6D3-20-4.tif

5. **Unit test of vacuum pump**
   - With a pipe arrangement as shown in the illustration, use the vacuum pump tester to conduct the measurement.

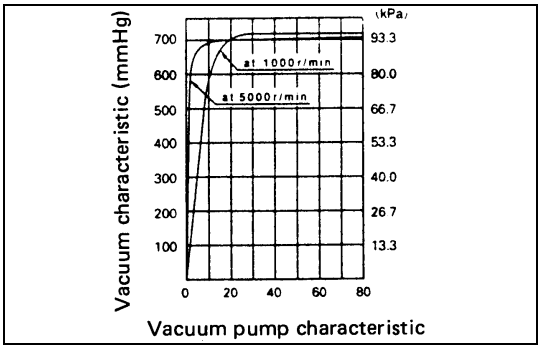

6D3-21-1.tif

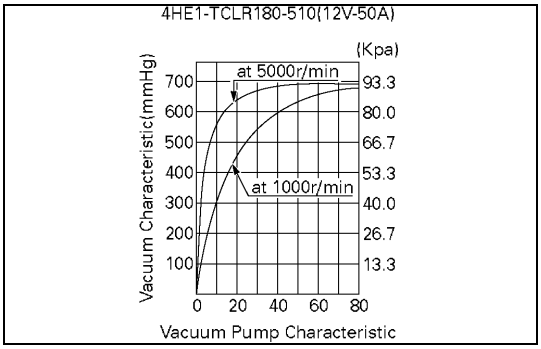

066LW003.tif

Item	Performance		Specifications
Vacuum characteristic	5000 rpm–66.7 kPa (500 mmHg)		Less than 4 sec.
	Max. 5000 rpm		More than 90.7 kPa (680 mmHg)
Vacuum-down performance	Valve of vacuum-down 15 sec. after the vacuum pump is stopped at 53.3 kPa (400 mmHg).		Less tan 2.67 kPa (20 mmHg)
Test condition	Oil used	Mobil oil #30	
	Oil amount	75 ± 5°C	
	Oil pressure	441kPa (4.5 kgf/cm²)	

6D3-21-3.tif

4HE1-TC LR180-510(12V-50A)			
Item	Performance		Specifications
Vacuum characteristic	5000 rpm-66.7kPa (500mmHg)		Less than 10 sec.
	Max. 5000 rpm		More than 90.7 kPa (680 mmHg)
Vacuum-down performance	Valve of vacuum-down 15 sec. after the vacuum pump is stopped at 53.3 kPa(400 mmHg).		Less tan 2.67 kPa (20 mmHg)
Test condition	Oil used	Mobil oil #30	
	Oil amount	75±5°C	
	Oil pressure	441kPa(4.5kgf/cm²)	

6D3-21-4.tif

- Pour about 20 liter of engine oil into the vacuum pump tester.
- Increase the generator rotations gradually, and check to see if the engine oil is fully circulated by discharging oil from the exhaust side of the vacuum pump.
- Close the release valve and measure the “vacuum characteristic” and the “vacuum drop characteristic (air tight characteristic).” Then check the obtained values based on the table left.

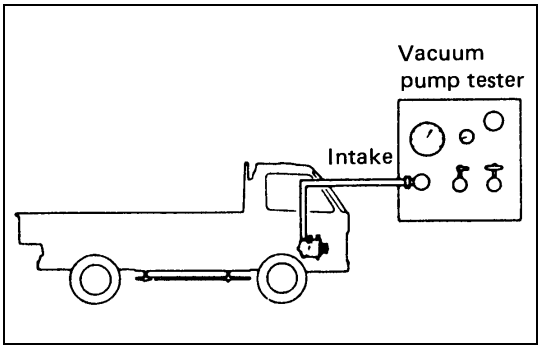

6D3-22-1.tif

6. On-vehicle test of the vacuum pump

- Install the generator to the engine.
- With the engine idling, check to see if oil is being discharged sufficiently from the exhaust side of the vacuum pump.
- Idle the engine until the engine oil temperature gets to the range of 70 to 80°C.
- Connect the pipe only to the suction side of the vacuum pump tester, and conduct the test in the same manner as in the unit test. When the resulting value is outside the specified range, re-check the vacuum pump.

SECTION 6D6

QOS II PREHEATING SYSTEM

CONTENTS

PAGE

General Description ..... 6D6 - 1

Starting Circuit Diagram (Reference) ..... 6D6 - 3

Inspection and Repair ..... 6D6 - 4

Troubleshooting ..... 6D6 - 7

GENERAL DESCRIPTION

QOS II preheating system features a quick-on glow plug with thermometer control of the glowing time and the afterglow time function.

The system consists of a timer, indicator lamp, thermosensor, relay and temperature self-control type glow plug (4 pcs).

With the employment of the thermosensor, the glow time changes according to the engine coolant temperature, thus allowing optimum starting conditions to be obtained.

The afterglow time function is controlled by thermosensor.

QUICK-ON-START II (QOS II)

SYSTEM DIAGRAM

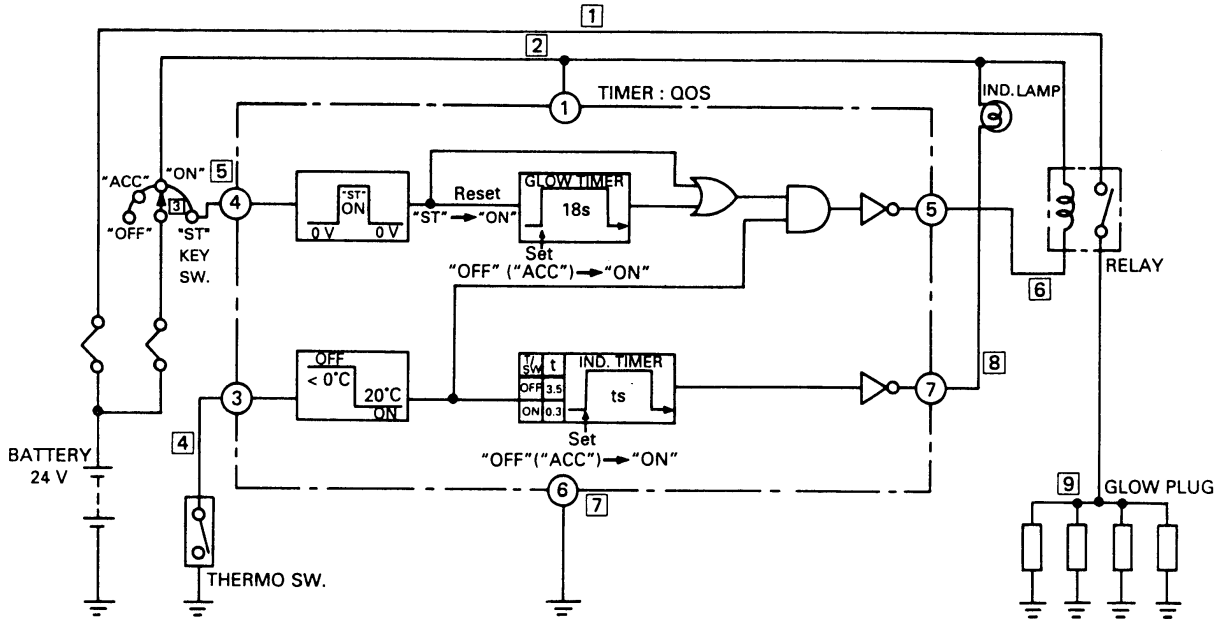

TIMING CHART

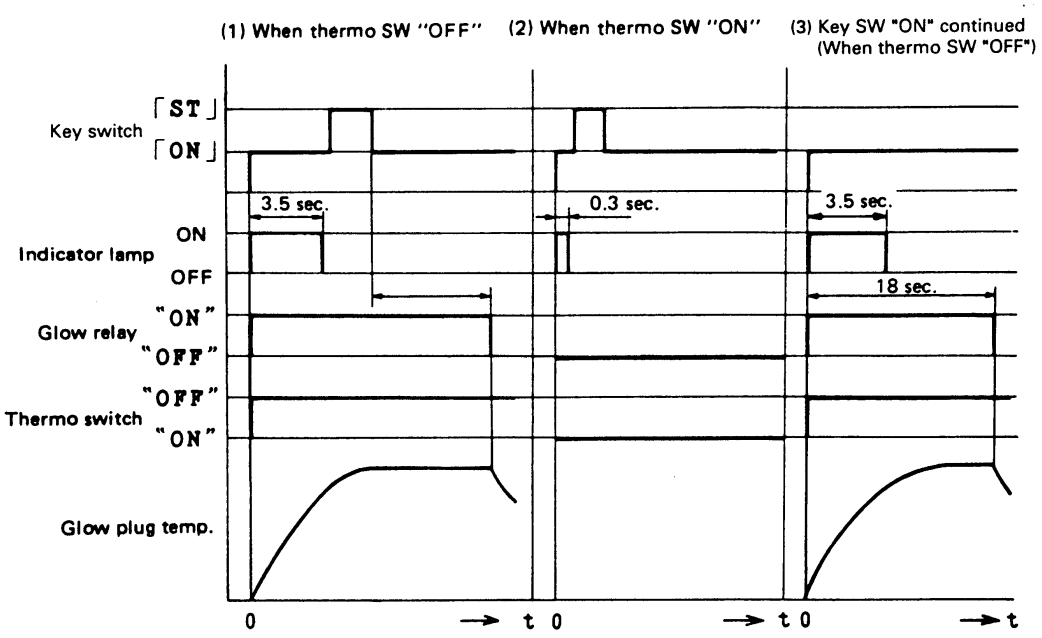

6D6-2-1.tif

STARTING CIRCUIT DIAGRAM (REFERENCE)

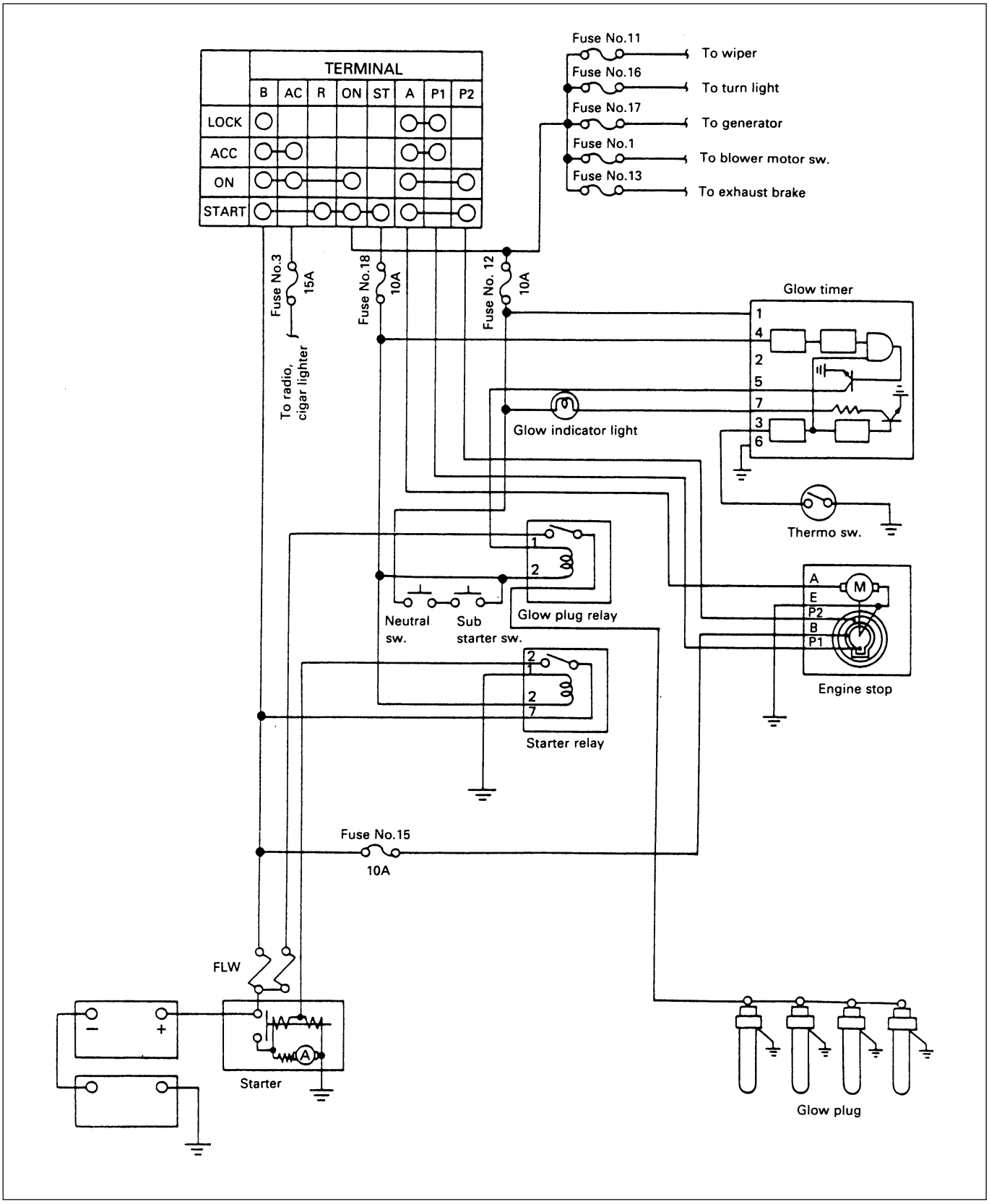

6D6-3-1.tif

INSPECTION AND REPAIR

Make the necessary adjustments, repairs, and part replacements if excessive wear or damage is discovered during inspection.

QUICK-ON-START II (QOS II)

System

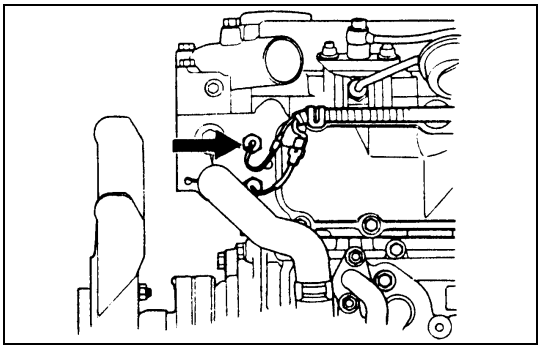

6D6-4-1.tif

1. Disconnect the connector of the thermo switch.

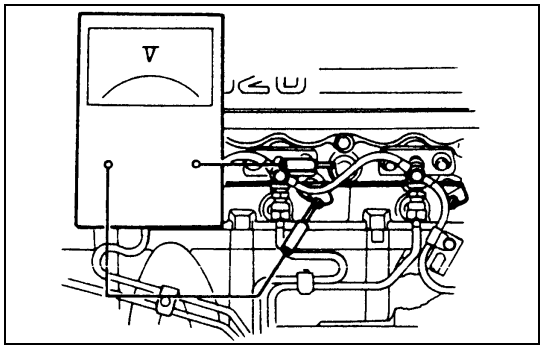

6D6-4-2.tif

2. Set the voltage meter in connection as shown in the illustration.
3. Turn the key switch to “ON” position without engine turned and check the following items.

Glow Indicator Lighting Time	Seconds
Standard	3.5

Power Source Voltage Indicating Time	Seconds
Standard	18

When abnormal, check the QOS timer, the glow relay and the thermo switch.

When normal, check the glow plug.

Timer

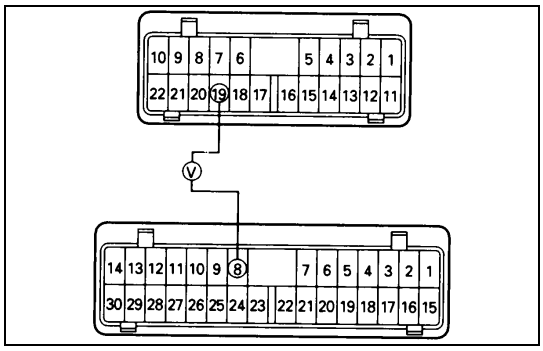

6D6-4-3.tif

1. Disconnect the connector of the thermo switch.
2. Set the voltage meter in connection as shown the illustration with connector connected.
3. Turn the key switch to “ON” position without engine turned, and check the following.

0 Volts Indicating Time	Seconds
Standard	18

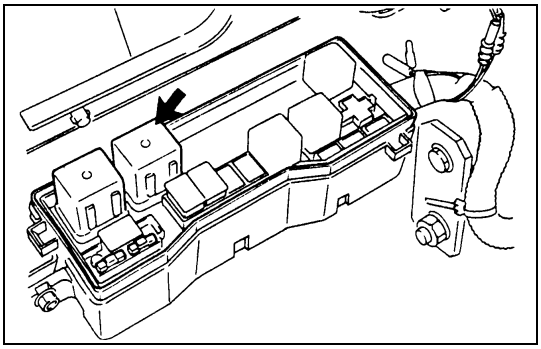

6D6-5-1.tif

GLOW PLUG RELAY

Location

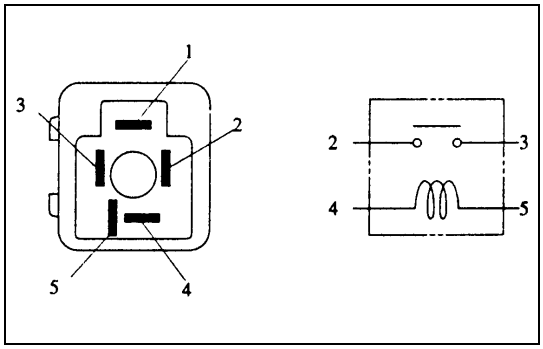

6D6-5-2.tif

Specification

Measure the glow relay resistance between the terminal ④ and the ⑤ with a circuit tester.

If the measured resistance is outside the specified range, the glow relay must be replaced.

Glow Relay Resistance (Reference) ohms

Standard	100

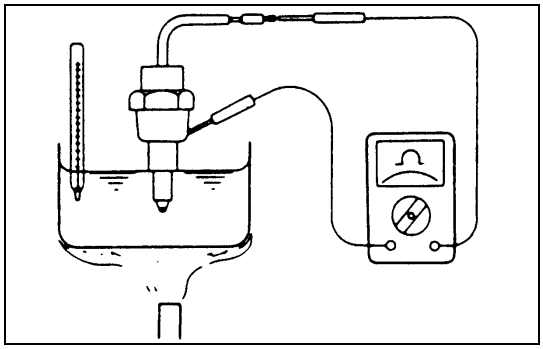

6D6-5-3.tif

THERMO-SWITCH

Specification

Operating Temperature °C (°F)

OFF → ON	7 - 13 (44.6 - 55.4)
ON → OFF	Over 3 (37.4)

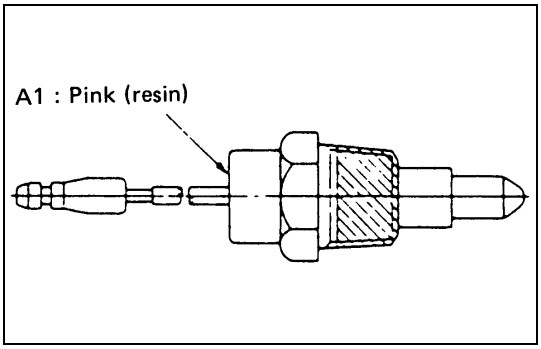

6D6-5-4.tif

- Before installing the thermo-switch, apply LOCTITE 262 or its equivalent to the portion shown in the illustration.

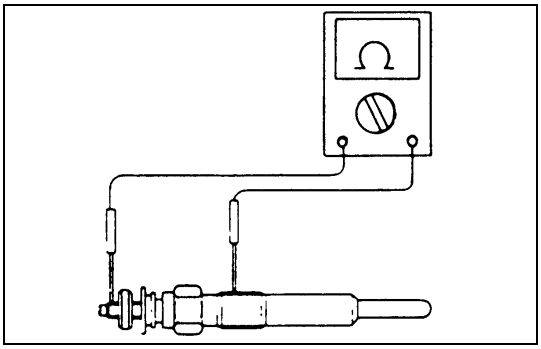

6D6-6-1.tif

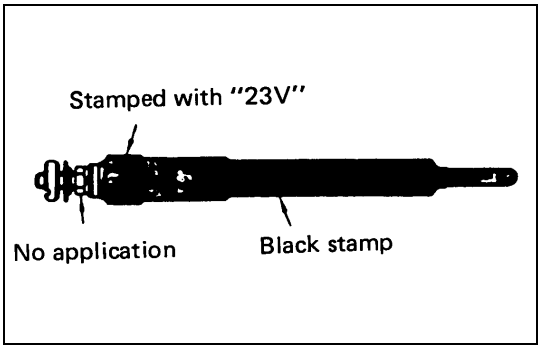

6D6-6-2.tif

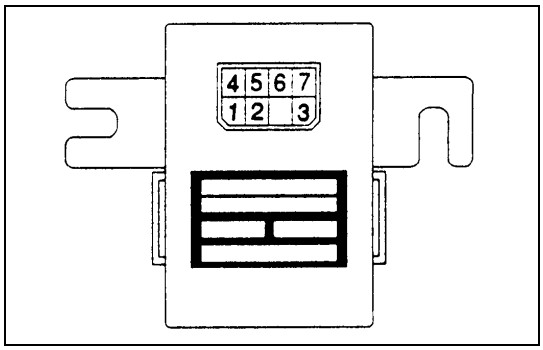

6D6-6-3.tif

Glow plug check

- Use the circuit tester to measure the continuity of the glow plug.
- When the obtained value is outside the specified range, replace the glow plug with a new one.

Glow plug resistance=About 4Ω (at room temperature)

NOTE:

When changing glow plugs, use a set of 4 glow plugs of the same manufacture.

- Note that an identification mark is provided to prevent any possible faulty assembly.

Type	Rated Voltage (V)	Total length mm (in)
Standard	23	141 (5.55)

QOS TIMER

Timer Specification

No.	Connection to
1	Starter SW"ON"
2	-
3	Thermo SW
4	Starter SW "ST"
5	Glow relay
6	Earth (ground)
7	Indicator lamp

TROUBLESHOOTING

1. Circuit diagram

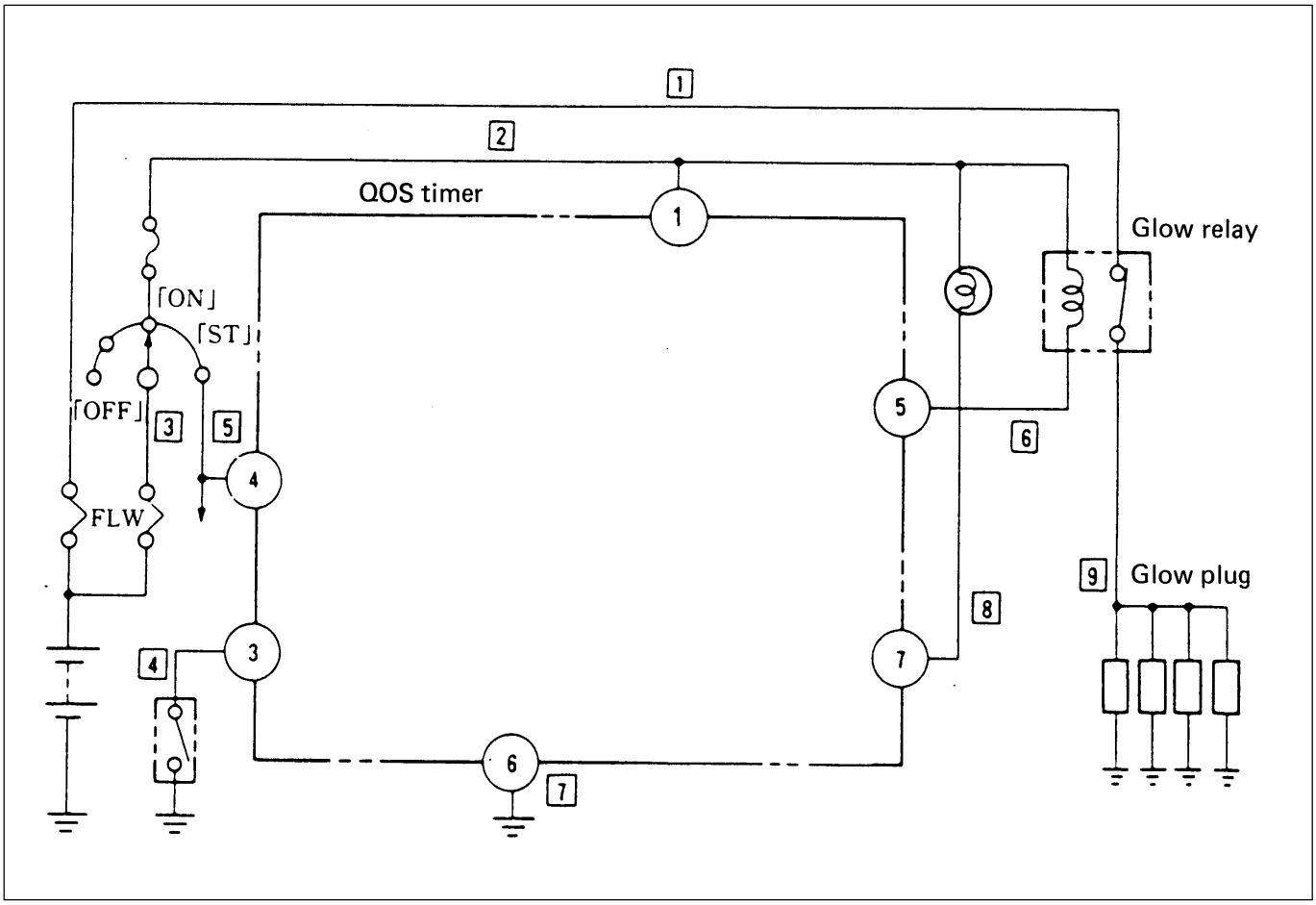

6D6-7-1.tif

Note:
A figure in a circle "○" shows a terminal No.
A figure in a square "□" shows a circuit No.

2. When the cooling water temperature is below 0°C.

Condition	Possible cause	Circuit
The glow relay does not turn on.	① Defective connection in fusible link between battery and starter switch	3
	② Defective connection or broken wire in starter switch circuit	
	③ Defective connection or broken wire in fuse No.8 } Items 3 and 4 above coincide with troubles in other circuits.	2
	④ Defective starter switch	
	⑤ Defective connection of glow relay terminal	1
	⑥ Broken wire in glow relay excitation coil	
	⑦ Broken wire in the circuit between glow relay and timer	6
	⑧ Defective glow relay (There is no continuity in main connection.)	
	⑨ Defective connection in QOS timer Defective QOS timer	
	⑩ Defective ground circuit in QOS timer	7
	⑪ Defective thermo-switch(The thermo-switch does not turn off even when water temperature is below zero.)	
	⑫ Defective ground circuit in thermo-switch	7
Glow relay turns on, but does not get preheated.	① Defective connection of fusible link between battery and start switch	1
	② Defective connection of glow relay main link terminal connector, or broken wire in preheating circuit	
	③ Defective connection of plug connector with preheating circuit	9
Glow relay remains on, and does not turn off.	① Defective QOS timer	
	② Circuit is shorted to ground between QOS timer terminal ⑤ and glow relay	6
	③ Defective glow relay	
Indicator lamp does not light on.	① Defective QOS timer	
	② Broken wire in bulb	8
	③ Broken wire in indicator lamp harness	

3. When the cooling water temperature is over 0°C.

Condition	Possible cause	Circuit
Indicator lamp does not light on.	① Defective QOS timer	
	② Broken wire in bulb	8
Indicator lamp lights on for a long time.	① Defective thermo-switch, or broken wire in thermo-switch circuit (Indicator lights on for about 3.5 sec.)	4
	② Defective QOS timer	
Glow relay is ready to turn on, or remains on.	① Circuit is shorted to ground between terminal ⑤ and glow relay.	6

SECTION 6E (4HE1-T/TC/4HG1-T Only)

EMISSION AND ELECTRICAL DIAGNOSIS

CAUTION:

When fasteners are removed, always reinstall them at the same location from which they were removed. If a fastener needs to be replaced, use the correct part number fastener for that application. If the correct part number fastener is not available, a fastener of equal size and strength for (stronger) may be used. Fasteners that are not reused, and those requiring thread locking compound, will be called out. The correct torque values must be used when installing fasteners that require it. If the above conditions are not followed, parts or system damage could result.

CONTENTS

SUBJECT	PAGE
GENERAL DESCRIPTION	6E - 4
NOTES FOR WORKING ON ELECTRICAL ITEM	6E - 4
SYMBOLS AND ABBREVIATIONS	6E - 9
CONNECTOR INSPECTING PROCEDURE	6E - 11
PARTS FOR ELECTRICAL CIRCUIT	6E - 12
DIAGNOSIS (4HE1-T/TC ONLY)	6E - 14
STRATEGY-BASED DIAGNOSTICS	6E - 14
GENERAL SERVICE INFORMATION	6E - 16
ON-BOARD DIAGNOSTIC (OBD)	6E - 17
READING DIAGNOSTIC TROUBLE CODES USING A TECH2 OR OTHER SCAN TOOL	6E - 19
TYPICAL SCAN DATA VALUES	6E - 23
TROUBLESHOOTING	6E - 24
SELF-DIAGNOSIS FUNCTIONS	6E - 25
DIAGNOSIS TROUBLE CODE LIST	6E - 28
LOCATION OF SENSOR AND SWITCH	6E - 31
PARTS LOCATION	6E - 33
ENGINE CONTROL MODULE (ECM)	6E - 34
CHART OF ECM INPUT/OUTPUT	6E - 35
LOCATION OF THE ECM CONNECTOR	6E - 37
LOCATION OF DLC	6E - 37
BRIEF EXPLANATION OF EMISSION AND ELECTRICAL CONTROL SYSTEM	6E - 38
MITICS (MECHANICALLY INTEGRATED TIMING AND INJECTION CONTROL SYSTEM)	6E - 38
GOVERNOR (MODEL RLD-M)	6E - 39
EGR (EXHAUST GAS RECIRCULATION) SYSTEM	6E - 40

VSS (VARIABLE SWIRL SYSTEM) ..... 6E - 41
ECM SYSTEM WIRING DIAGRAM ..... 6E - 42
AUXILIARY ENGINE CONTROL SYSTEM ..... 6E - 44
VSV CIRCUIT ..... 6E - 46
EXHAUST BRAKE AND WARM-UP CONTROL ..... 6E - 48
DTC-P13 ECT SENSOR CIRCUIT HIGH VOLTAGE ..... 6E - 49
DTC-P14 ECT SENSOR CIRCUIT LOW VOLTAGE ..... 6E - 52
DTC-P21 RACK SENSOR CIRCUIT LOW VOLTAGE ..... 6E - 55
DTC-P22 RACK SENSOR CIRCUIT HIGH VOLTAGE ..... 6E - 58
DTC-P23 SOLENOID SWITCH CONTROL CIRCUIT LOW VOLTAGE ..... 6E - 61
DTC-P24 SOLENOID SWITCH CONTROL CIRCUIT HIGH VOLTAGE ..... 6E - 65
DTC-P26 QWS RELAY CONTROL CIRCUIT HIGH VOLTAGE ..... 6E - 69
DTC-P31 EGR EVRV SOLENOID CIRCUIT LOW VOLTAGE ..... 6E - 73
DTC-P32 EGR EVRV SOLENOID CIRCUIT HIGH VOLTAGE ..... 6E - 76
DTC-P33 VSS CONTROL CIRCUIT LOW VOLTAGE ..... 6E - 79
DTC-P34 VSS CONTROL CIRCUIT HIGH VOLTAGE ..... 6E - 82
DTC-P35 EGR QUICK CUT VSV CONTROL CIRCUIT LOW VOLTAGE ..... 6E - 85
DTC-P36 EGR QUICK CUT VSV CONTROL CIRCUIT HIGH VOLTAGE ..... 6E - 88
DTC-P41 QOS RELAY CONTROL CIRCUIT LOW VOLTAGE ..... 6E - 91
DTC-P42 QOS RELAY CONTROL CIRCUIT HIGH VOLTAGE ..... 6E - 95
DTC-P43 ANEROID COMPENSATOR VSV CONTROL CIRCUIT LOW VOLTAGE ..... 6E - 99
DTC-P44 ANEROID COMPENSATOR VSV CONTROL CIRCUIT HIGH VOLTAGE ..... 6E -102
DTC-P45 ENGINE SPEED SENSOR CIRCUIT LOW VOLTAGE ..... 6E -105
DTC-P52 EEPROM ERROR ..... 6E -109
DTC-P61 BAROMETRIC PRESSURE SENSOR CIRCUIT ERROR ..... 6E -110
WITHOUT DIAGNOSIS TROUBLE CODE ..... 6E -111
ENGINE HUNTING ..... 6E -112
STARTUP FAILURE ..... 6E -113
WHITE SMOKE (EXCESSIVE) ..... 6E -115
BLACK SMOKE (EXCESSIVE) ..... 6E -117
LACK OF POWER ..... 6E -119
HIGH IDLE ENGINE SPEED ..... 6E -121
SOLENOID SWITCH MALFUNCTION ..... 6E -122
EXHAUST BRAKE MALFUNCTION ..... 6E -123
EGR SYSTEM MALFUNCTION ..... 6E -128
VSS SYSTEM MALFUNCTION ..... 6E -131
ANEROID COMPENSATOR MALFUNCTION ..... 6E -134

QWS SYSTEM MALFUNCTION ..... 6E -137
FICD SYSTEM MALFUNCTION ..... 6E -141
SPECIAL TOOLS ..... 6E -144

DIAGNOSIS (4HG1-T ONLY) ..... 6E -146
STRATEGY-BASED DIAGNOSTICS ..... 6E -146
GENERAL SERVICE INFORMATION ..... 6E -147
TROUBLESHOOTING ..... 6E -148
SELF-DIAGNOSIS FUNCTIONS ..... 6E -149
DIAGNOSIS TROUBLE CODE (DTC) LIST ..... 6E -151
LOCATION OF SENSOR AND SWITCH ..... 6E -153
PARTS LOCATION ..... 6E -155
ENGINE CONTROL MODULE (ECM) ..... 6E -156
CHART OF ECM INPUT/OUTPUT ..... 6E -157
LOCATION OF THE ECM CONNECTOR ..... 6E -158
LOCATION OF DLC ..... 6E -158
ECM SYSTEM WIRING DIAGRAM ..... 6E -159
AUXILIARY ENGINE CONTROL SYSTEM ..... 6E -160
VSV CIRCUIT ..... 6E -161
EXHAUST BRAKE CONTROL ..... 6E -162
DTC-13 ECT SENSOR CIRCUIT HIGH VOLTAGE ..... 6E -163
DTC-14 ECT SENSOR CIRCUIT LOW VOLTAGE ..... 6E -166
DTC-21 RACK SENSOR CIRCUIT LOW VOLTAGE ..... 6E -169
DTC-22 RACK SENSOR CIRCUIT HIGH VOLTAGE ..... 6E -172
DTC-31 EGR VSV SOLENOID CIRCUIT LOW VOLTAGE ..... 6E -175
DTC-32 EGR VSV SOLENOID CIRCUIT HIGH VOLTAGE ..... 6E -178
DTC-41 QOS RELAY CONTROL CIRCUIT LOW VOLTAGE ..... 6E -181
DTC-42 QOS RELAY CONTROL CIRCUIT HIGH VOLTAGE ..... 6E -185
DTC-52 EEPROM ERROR ..... 6E -189
WITHOUT DIAGNOSIS TROUBLE CODE ..... 6E -190
STARTUP FAILURE (QOS Only) ..... 6E -191
BLACK SMOKE (EXCESSIVE) ..... 6E -193
LACK OF POWER ..... 6E -195
EXHAUST BRAKE MALFUNCTION (Exhaust Brake Only) ..... 6E -197
EGR SYSTEM MALFUNCTION ..... 6E -202
SPECIAL TOOLS ..... 6E -205

GENERAL DESCRIPTION

The emission and electrical control system operates on a twenty four volt power supply with negative ground polarity. Each wire in the vehicle is of a specific size and has an identifying colored insulation.

These colors are indicated in wiring diagrams and will help in tracing circuits and making proper connections. Wire size is determined by load capacity and circuit length. Some wires are grouped together and taped. Such a grouping of wires is called a harness.

The harness use a split corrugated tube to protect the wires from the elements. Each circuit consists of the following:

- Power source - the battery and the alternator.
- Wires - To carry electrical current through the circuit.
- Fuses - To protect the circuit against current overload.
- Relays - To protect voltage drop between the battery and the circuit parts and to protect the switch points against burning.
- Switches - To open and close the circuit.
- Load - Any device, such as a light or a motor, which converts the electrical current into useful work.
- Ground - To allow the current to flow back to the power source.

In this manual, such electrical device is classified by system. For major parts shown on the circuit based on the circuit diagram for each system, inspection and removal and installation procedures are detailed.

NOTES FOR WORKING ON ELECTRICAL ITEMS

BATTERY CABLE

Disconnecting the Battery Cable

1) All switches should be in the "OFF" position.
2) Disconnect the battery ground cable.
3) Disconnect the battery positive cable
4) Disconnect the battery cable ①.

CAUTION:

It is important that the battery ground cable be disconnected first.

Disconnecting the battery positive cable first can result in a short circuit.

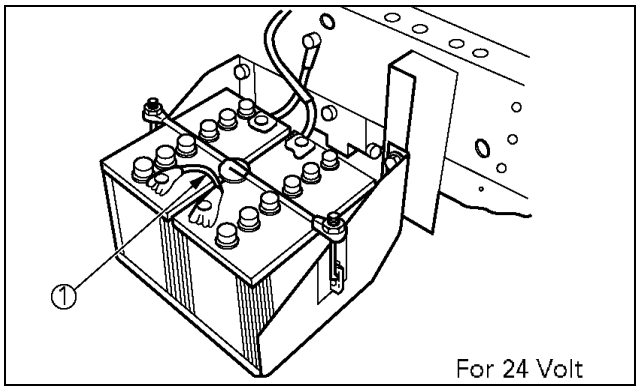

826LW014.tif

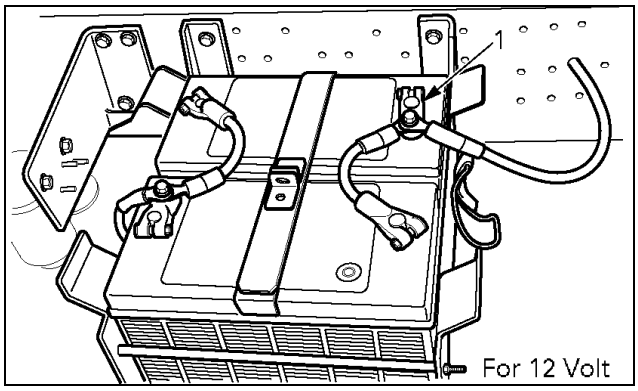

826LW007.tif

Connecting the Battery Cable

Follow the disconnecting procedure in the reverse order.

CAUTION:

Clean the battery terminal and apply a light coat of grease to prevent terminal corrosion.

Connecting Handling

Disconnecting The Connectors

Some connectors have a tang lock to hold the connectors together during vehicle operation.
Some tang locks are released by pulling them towards you ①.
Other tang locks are released by pressing them forward ②.
Determine which type of tang lock is on the connector being handled.
Firmly grasp both sides (male and female) of the connector.

Release the tang lock and carefully pull the two halves of the connector apart.

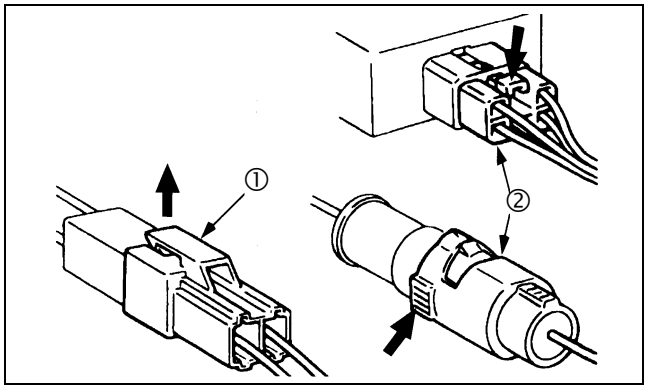

6E-001.tif

Never pull on the wires to separate the connectors. This will result in wire breakage.

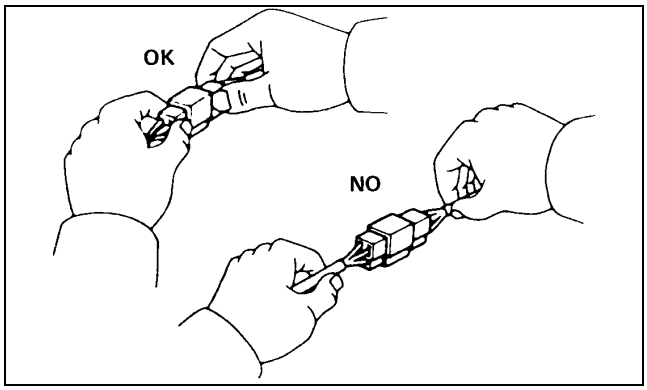

8-4-1.tif

Connecting the Connector

Firmly grasp both sides (male and female) of the connector. Be sure that the connector pins and pin holes match. Be sure that both sides of the connector are aligned with each other. Firmly but carefully push the two sides of the connector together until a distinct click is heard.

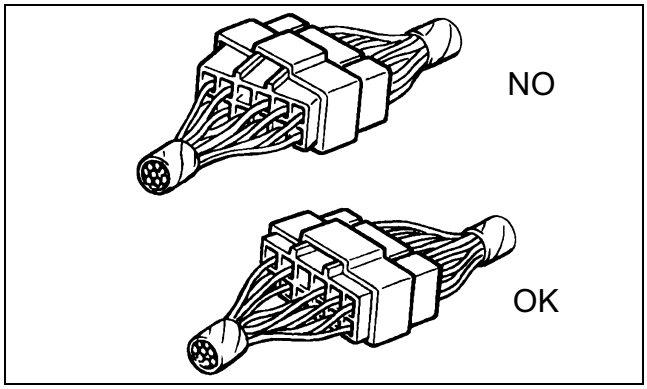

6E-002.tif

Connector Inspection

Use a circuit tester to check the connector for continuity. Insert the test probes from the connector wire side.

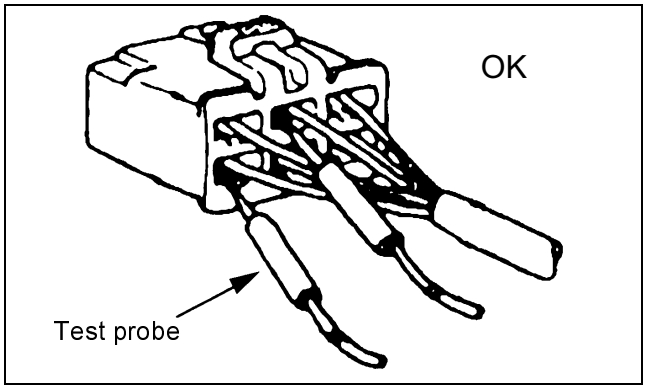

6E-003.tif

Never insert the circuit tester test probes into the connector open end to test the continuity. Broken or open connector terminals will result.

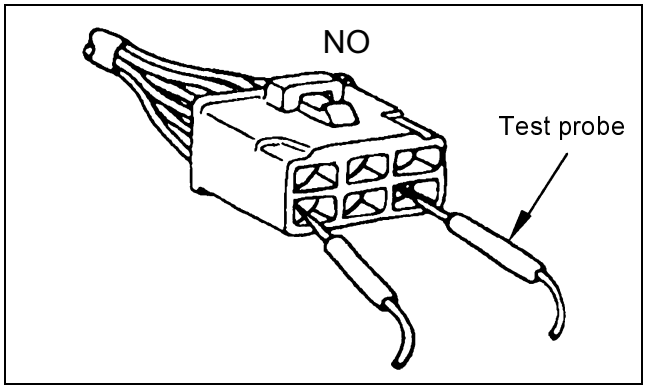

6E-004.tif

Waterproof Connector Inspection

It is not possible to insert the test probes into the connector wire side of a waterproof connector. Use one side of a connector (1) with its wires cut to make the test. Connect the test connector (2) to the connector to be tested. Connect the test probes to the cut wires to check the connector continuity.

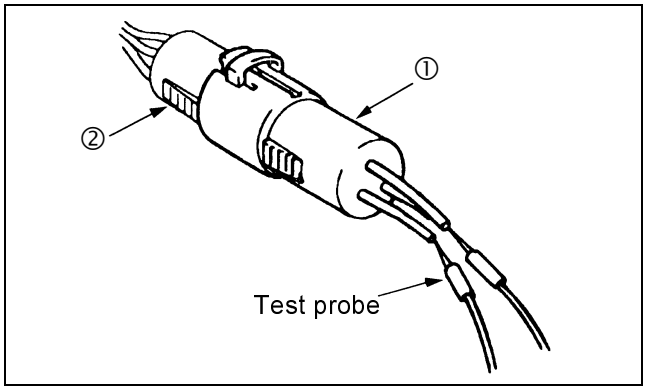

6E-005.tif

Connector Pin Removal

Connector Housing Tang Lock Type

1) Insert a slender shaft into the connector housing open end.
2) Push the tang lock up (in the direction of the arrow in the illustration). Pull the wire with pin free from the wire side of the connector.

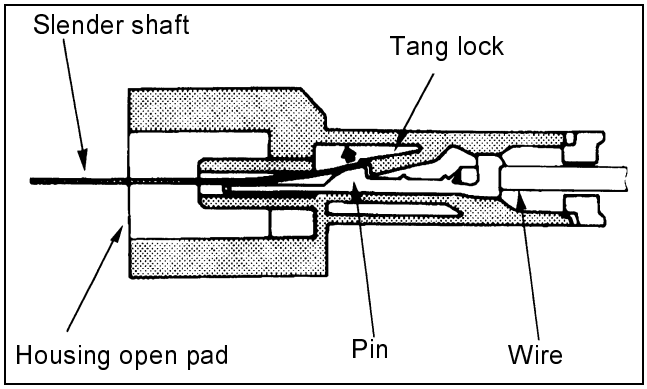

6E-006.tif

Pin Tang Lock Type

1) Insert a slender shaft into the Connector housing open end.
2) Push the tang lock flat (toward the wire side of the connector). Pull the wire with pin free from the wire side of the connector.

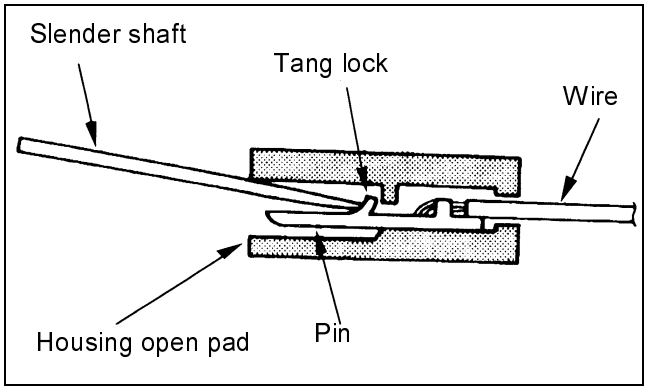

6E-007.tif

Connector Pin Insertion

1) Check that the tang lock is fully up.
2) Insert the pin from the connector wire side.
   Push the pin in until the tang lock closes firmly.
3) Gently pull on the wires to make sure that the connector pin is firmly set in place.

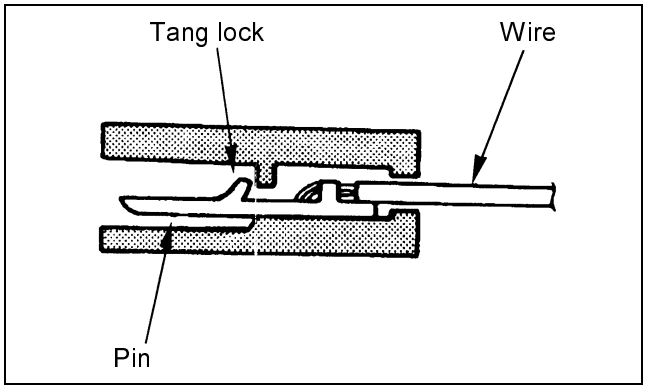

6E-008.tif

Parts Handling

Be careful when handling electrical parts. They should not be dropped or thrown, because short circuit or other damage may result.

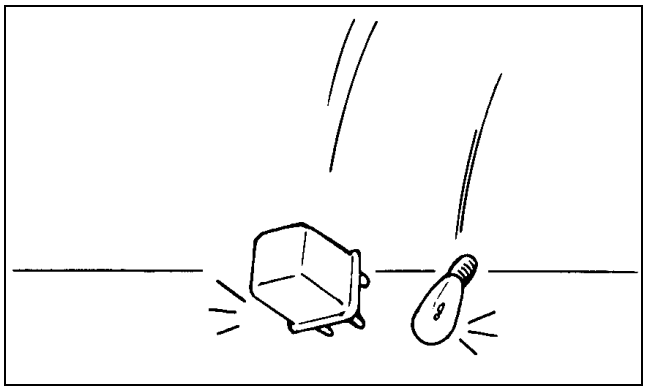

8-5-5.tif

Cable Harness

When installing the parts, be careful not to pinch or wedge the wiring harness.

All electrical connections must be kept clean and tight.

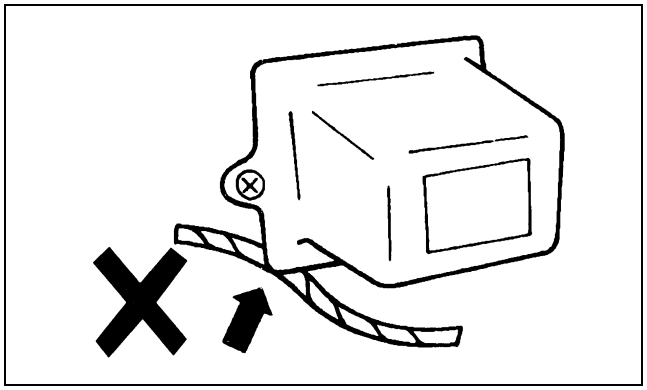

6E-009.tif

SPLICING WIRE

1. Open the Harness

If the harness is taped, remove the tape. To avoid wire insulation damage, use a sewing "seam ripper" (available from sewing supply stores) to cut open the harness.

If the harness has a block plastic conduit, simply pull out the desired wire.

2. Cut the wire

Begin by cutting as little wire off the harness as possible. You may need the extra length of wire later if you decide to cut more wire off to change the location of a splice. You may have to adjust splice locations to make certain that each splice is at least 1-1/2in (40 mm) away from other splices, harness branches, or connectors.

3. Strip the insulation

When replacing a wire, use a wire of the same size as the original wire. Check the stripped wire for nicks or cut stands. If the wire is damaged, repeat the procedure on a new section of wire. The two stripped wire ends should be equal in length.

4. Crimp the Wires

Select the proper clip to secure the splice. To determine the proper clip size for the wire being spliced, follow the directions included with your clips. Select the correct anvil on the crimper. (On most crimpers your choice is limited to either a small or large anvil.) Overlap the two stripped wire ends and hold them between your thumb and forefinger. Then, center the splice clip under the stripped wires and hold it in place.

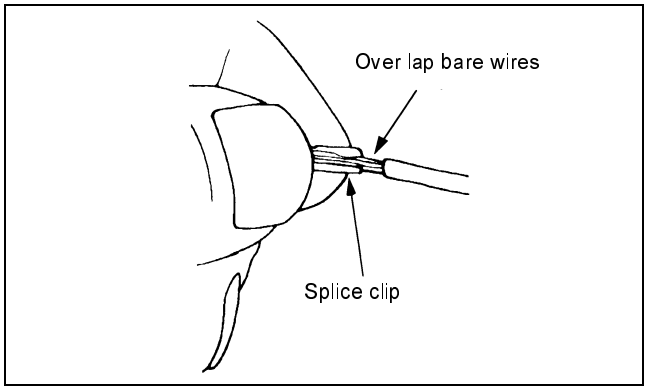

6E-010.tif

- Open the crimping tool to its full width and rest one handle on a firm flat surface.
- Center the back of the splice clip on the proper anvil and close the crimping tool to the point where the back of the splice clip touches the wings of the clip.
- Make sure that the clip and wires are still in the correct position. then, apply steady pressure until the crimping tool closes.

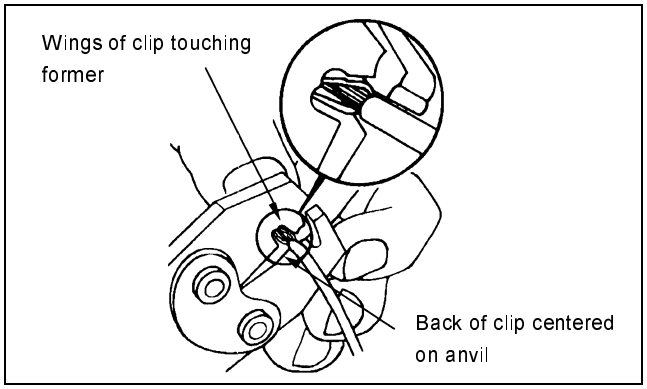

6E-011.tif

Before crimping the ends of the clip, be sure that:

- The wires extend beyond the clip in each direction.
- No stands of wire are cut loose, and
- No insulation is caught under the clip.

Crimp the splice again, once on each end. Do not let the crimping tool extend beyond the edge of the clip or you may damage or nick the wires.

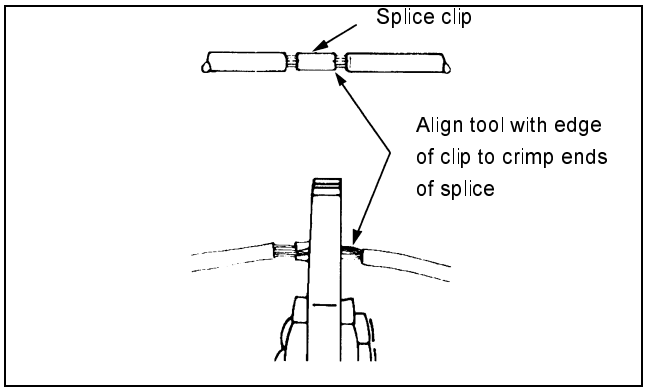

6E-012.tif

5. Solder

Apply 60/40 rosin core colder to the opening in the back of the clip. Follow the manufacturer's instructions for the solder equipment you are using.

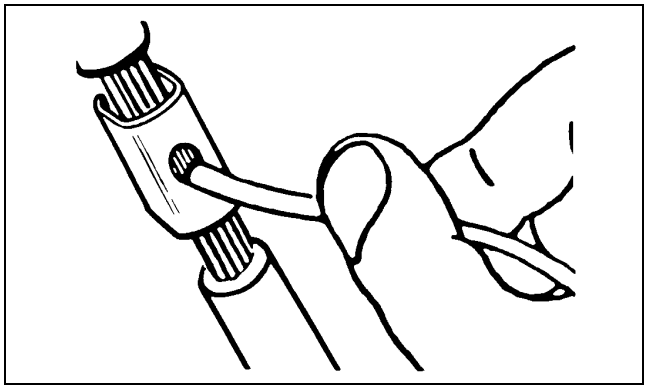

8-8-1.tif

6. Tape the Splice

Center and roll the splicing tape. The tape should cover the entire splice. Roll on enough tape to duplicate the thickness of the insulation on the existing wires. Do not flag the tape. Flagged tape may not provide enough insulation, and the flagged ends will tangle with the other wires in the harness.

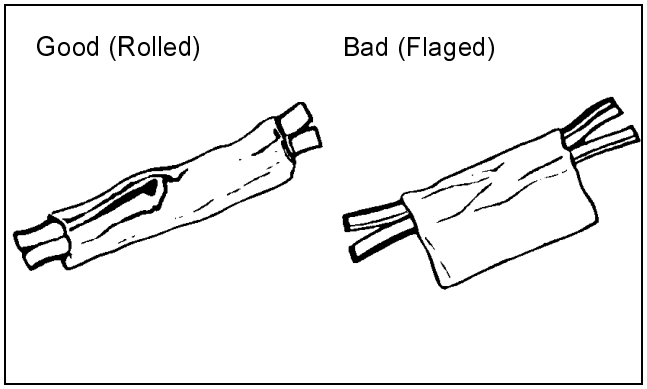

8-8-2.tif & 8-8-3

If the wire does not belong in a conduit or other harness covering, tape the wire again. Use a winding motion to cover the first piece of tape.

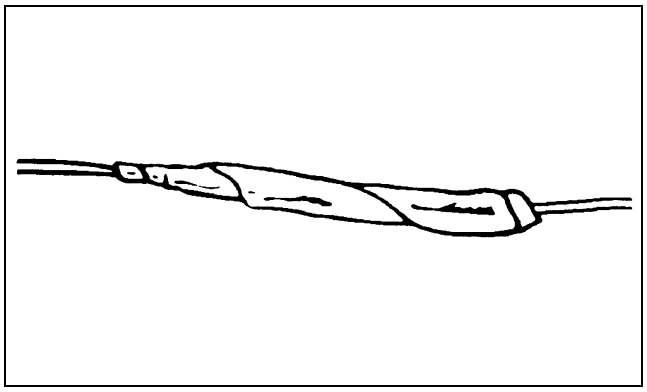

8-8-4.tif

SYMBOLS AND ABBREVIATIONS

Symbols

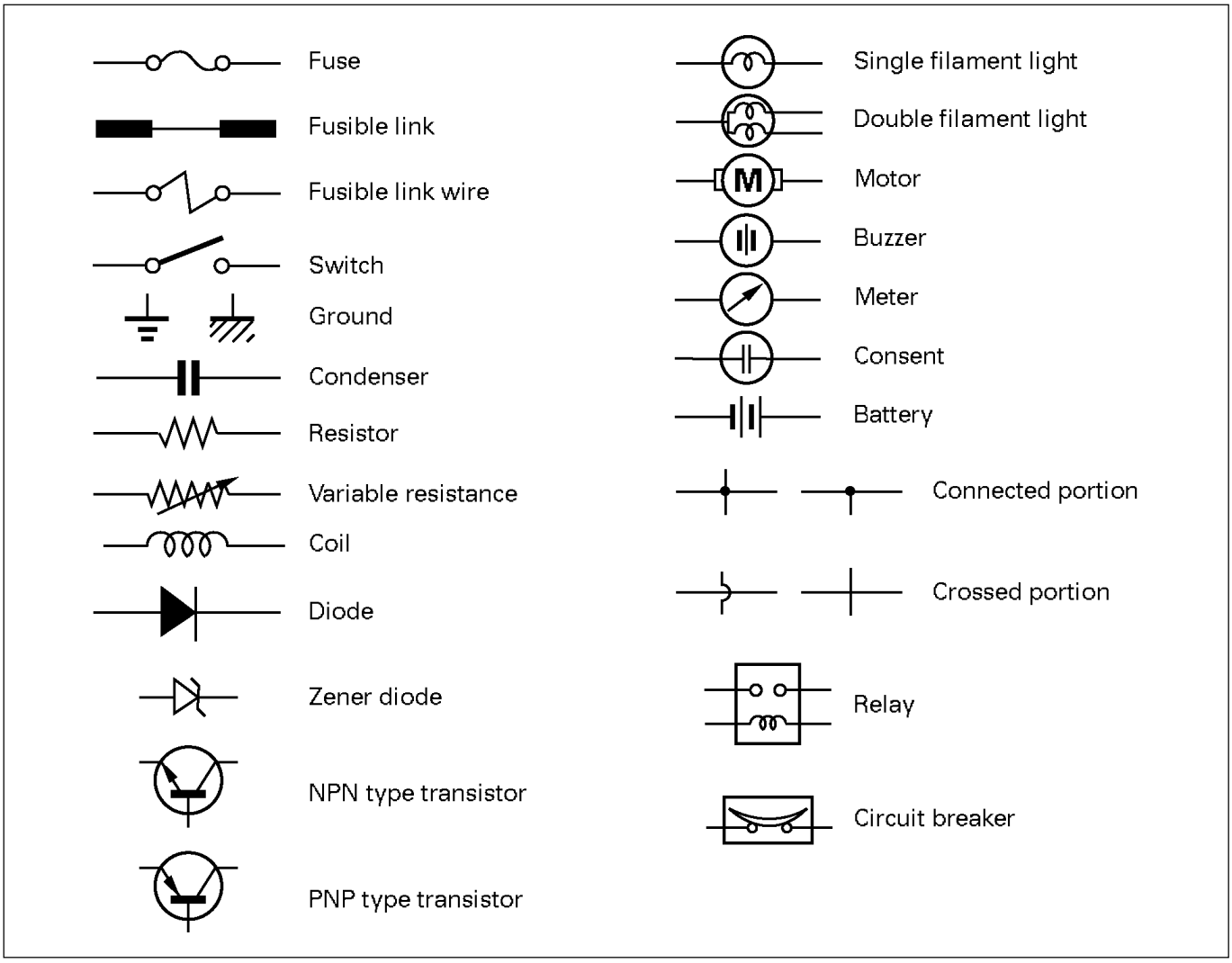

F08MT001.tif

Abbreviations

Abbreviation	Meaning	Abbreviation	Meaning
A/C	Air Conditioner	OBD	BOARD Diagnostic
ACC	Accessory	OFF	Turn Off (Switch/Lamp)
ACT	Actuator	ON	Turn On (Switch/Lamp)
ASSIT	Assistant	OPT	Option
BATT	Battery	P/BRAKE	Parking Brake
		PGND	Power Ground (To Body Earth)
CAS	Cab Air Suspension	PIN	Pin or Terminal
CAS C/U	Cab Air Suspension Control Unit	P/L	Pilot (Warning) Lamp
CCS	Combined Charging System	PRESS	Pressure
CONN	Connector	P/T	Power Train
C/U	Control Unit	PTO	Power Take Off
DC	Direct Current	Q ADJUSTMENT	Injection Quantity Adjustment
D/CONN	Diagnosis Connector	QOS	Quick On Start
DTC	Diagnostic Trouble Code	QWS	Quick Warm System
EC	Electrical Control Governor	RH	Right Hand (Side)
ECM	Engine Control Module	RHD	Right Hand Drive
ECT	Engine Coolant Temperature	R/L	Relay
EGR	Exhaust Gas Recirculation	RR	Rear
EH	Electrical And Hydraulic Timer		
EXH	Exhaust	S/ASB	Shock Absorber
EVRV	Electronic Vacuum Regulating Valve	SIG	Signal
		SS	Speed Sensor
FICD	Fast Idle Control Device	SS C/U	Speed Sensor Control Unit
FRT	Front	STD	Standard
		SUSP	Suspension
GND	Ground (Body Earth)	SW	Switch
IE	ISUZU Economy System	TCV	Trailer Cock Valve
IN	Inlet, Intake	TICS	Timing And Injection Rate Control System
IVES	ISUZU Variable Electric And Economy Swirl		
		VGS	Variable Geometry Turbocharging System
LH	Left Hand (Side)		
LHD	Left Hand Drive	VSS	Variable Swirl System
		VSV	Vacuum Switching Valve
MAG	Magnetic		
ME/CONN	Memory Eraser Connector	W/L	Warning Lamp
MIL	Malfunction Indicator Lamp	W/	With
M/V	Magnetic Valve	W/O	Without
N	Neutral (Transmission Gear)		
N-TDC	Numbers Top Dead Center		
NR	Noise Reducer		

CONNECTOR INSPECTING PROCEDURE

Connector inspecting procedure

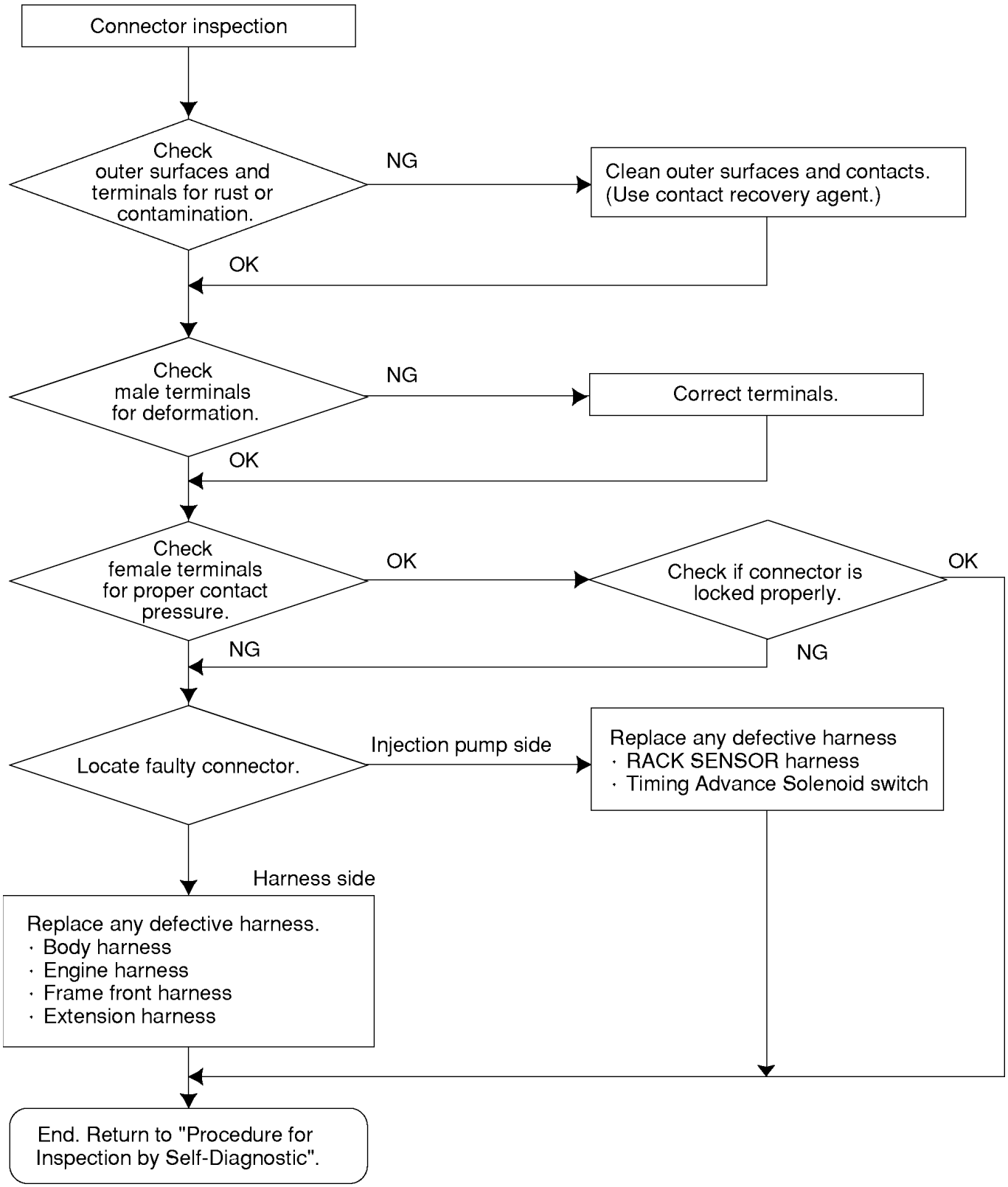

Flow01Cntr.tif

PARTS FOR ELECTRICAL CIRCUIT

Wiring

Wire Color

All wires have color-coded insulation.

Wires belonging to a system's main harness will have a single color. Wires belonging to a system's sub circuits will have a colored stripe. Striped wires use the following code to show wire size and colors.

Example: 0.5 G R

- R — Red (Stripe color)
- G — Green (Base color)
- 0.5 — Wire size (0.5 mm)

Abbreviations are used to indicate wire color within a circuit diagram.

Refer to the following table.

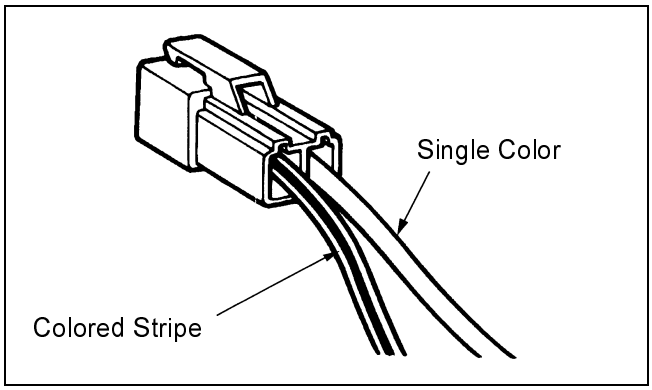

6E-013.tif

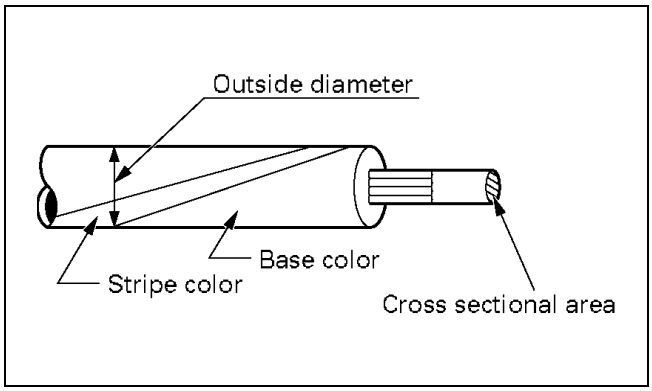

F06HV020.tif

Wire Color Coding

Color-coding	Meaning	Color-coding	Meaning
B	Black	Br	Brown
W	White	Lg	Light green
R	Red	Gr	Gray
G	Green	P	Pink
Y	Yellow	Sb	Sky blue
L	Blue	V	Violet
O	Orange		

Stripe Color Coding

Color-code	Base Color	Stripe Color
LB	Blue	Black
OB	Orange	Black
PB	Pink	Black
PG	Pink	Green
PL	Pink	Blue
RY	Red	Yellow
VR	Violet	Red
VW	Violet	White
YB	Yellow	Black
YB	Yellow	Green
YV	Yellow	Violet

Wire Size

The size of wire, used in a circuit is determined by the amount of current (amperage), the length of the circuit, and the voltage drop allowed. The following wire size and load capacity, shown below, are specified by JIS (Japanese Industrial Standard) (Nominal size means approximate cross sectional area)

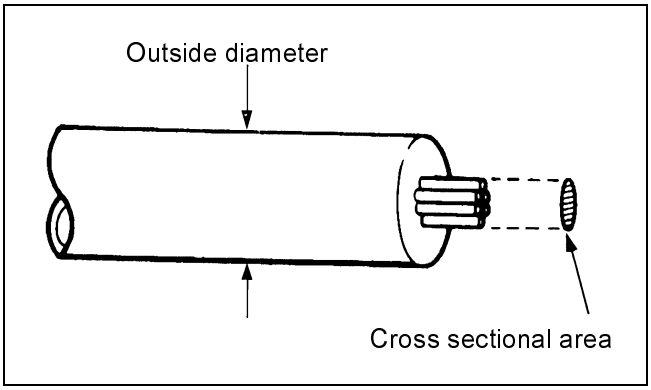

6E-014.tif

Nominal size	Cross sectional area (mm^2)	Outside diameter (mm)	Allowable current (A)
0.3	0.372	1.8	9
0.5	0.563	2.0	12
0.85	0.885	2.2	16
1.25	1.287	2.5	21
2	2.091	2.9	28
3	3.296	3.6	37.5
5	5.227	4.4	53
8	7.952	5.5	67
15	13.36	7.0	75
20	20.61	8.2	97

DIAGNOSIS (4HE1-T/TC Only)

STRATEGY-BASED DIAGNOSTICS

Strategy-Based Diagnostics

The strategy-based diagnostic is a uniform approach to repair all Electrical/Electronic (E/E) systems. The diagnostic flow can always be used to resolve an E/E system problem and is a starting point when repairs are necessary. The following steps will instruct the technician how to proceed with a diagnosis:

1. Verify the customer complaint.
   - To verify the customer complaint, the technician should know the normal operation of the system.
2. Perform preliminary checks.
   - Conduct a thorough visual inspection.
   - Review the service history.
   - Detect unusual sounds or odors.
   - Gather diagnostic trouble code information to achieve an effective repair.
3. Check bulletins and other service information.
   - This includes videos, newsletters, etc.
4. Refer to service information (manual) system check (s).
   - “System checks” contain information on a system that may not be supported by one or more DTCs.

     System checks verify proper operation of the system. This will lead the technician in an organized approach to diagnostics.
5. Refer to service diagnostics.

Diagnostic Trouble Code (DTC) Stored

Follow the designated DTC chart exactly to make an effective repair.

No DTC

Select the symptom from the symptom tables. Follow the diagnostic paths or suggestions to complete the repair. You may refer to the applicable component/system check in the system checks.

No Matchig Symptom

1. Analyze the complaint.
2. Develop a plan for diagnostics.
3. Utilize the wiring diagrams and the theory of operation.

Call technical assistance for similar cases where repair history may be available. Combine technician knowledge with efficient use of the available service information.

Intermittents

Conditions that are not always present are called intermittents. To resolve intermittents, perform the following steps:

1. Observe history DTCs, DTC modes.
2. Evaluate the symptoms and the conditions described by the customer.
3. Use a check sheet or other method to identify the circuit or electrical system component.
4. Follow the suggestions for intermittent diagnosis found in the service documentation.

Most scan tool, such as the Tech II have data-capturing capabilities that can assist in detecting intermittents.

No Trouble Found

This condition exists when the vehicle is found to operate normally. The condition described by the customer may be normal. Verify the customer complaint against another vehicle that is operating normally. The condition may be intermittent. Verify the complaint under the conditions described by the customer before releasing the vehicle.

1. Re-examine the complaint

   When the Complaint cannot be successfully found or isolated, a re-evaluation is necessary. The complaint should be re-verified and could be intermittent as defined in Intermittents, or could be normal.
2. Repair and verify.

   After isolating the cause, the repairs should be made.

   Validate for proper operation and verify that the symptom has been corrected. This may involve road testing or other methods to verify that the complaint has been resolved under the following conditions:
   - Conditions noted by the customer.
   - If a DTC was diagnosed, verify a repair by duplicating conditions present according to customer complaint.

Verifying Vehicle Repair

Verification of the vehicle repair will be more comprehensive for vehicles with OBD system diagnostics. Following a repair, the technician should perform the following steps:

IMPORTANT:

Follow the steps below when you verify repairs on board diagnostic systems. Failure to follow these steps could result in unnecessary repairs.

1. Review and record the Failure Records for the DTC which has been diagnosed.
2. Clear the DTC (S).
3. Operate the vehicle within conditions according to customer complaint.
4. Monitor the Diagnostic Trouble Code (DTC) status information for the specific DTC which has been diagnosed until the diagnostic test associated with that DTC runs.

GENERAL SERVICE INFORMATION

On Board Diagnostic (OBD) Serviceability Issues

The list of non-vehicle faults that could affect the performance of the OBD system has been complied. These non-vehicle faults vary from environmental conditions to the quality of fuel used.

The illumination of the Malfunction Indicator Lamp (MIL) ("Check Engine" lamp) due to a non-vehicle fault could lead to misdiagnosis of the vehicle, increased warranty expense and cuctomer dissatisfaction. The following list of non-vehicle faults does not include every possible fault and may not apply equally to all product lines.

Poor Vehicle Maintenance

The sensitivity of OBD diagnostics will cause the MIL to turn on if the vehicle is not maintained properly. Restricted air filters, fuel filters, and crankcase deposits due to lack of oil changes or improper oil viscosity can trigger actual vehicle faults that were not previously monitored prior to OBD. Poor vehicle maintenance can not be classified as a "non-vehicle fault", but with the sensitivity of OBD diagnostics, vehicle maintenance schedules must be more closely followed.

Maintenance Schedule

Refer to the maintenance Schedule.

Visual/Physical Engine Compartment Inspection

Perform a careful visual and physical engine compartment inspection when performing any diagnostic procedure or diagnosing the cause of an emission test failure. This can often lead to repairing a problem without further steps. Use the following guidelines when performing a visual/physical inspection:

- Inspection all vacuum hoses for punches, cuts, disconnects, and correct rouring.
- Inspect hoses that are difficult to see behind other components.
- Inspect all wires in a engine compartment for proper connections, burned or chafed spots, pinched wires, contact with sharp edges or contact with hot exhaust manifolds or pipes.

Basic Knowledge of Tools Required

NOTE:

Lack of basic knowledge of this powertrain when performing diagnostic procedures could result in an incorrect diagnosis or damage to powertrain components. Do not attempt to diagnose a powertrain problem without this basic knowledge.

A basic understanding of hand tools is necessary to effectively use this section of the Servise Manual.

ON-BOARD DIAGNOSTIC (OBD)

On-Board Diagnostic Tests

A diagnostic test is a series of steps, the result of which is a pass or fail reported to the diagnostic executive. When a diagnostic test reports a pass result, the diagnostic executive records the following data:

- The diagnostic test has been completed since the last ignition cycle.
- The diagnostic test has passed during the current ignition cycle.
- The fault identified by the diagnostic test is not currently active.

When a diagnostic test reports a fail result, the diagnostic executive records the following data:

- The diagnostic test has been completed since the last ignition cycle.
- The fault identified by the diagnostic test is currently active.
- The fault has been active during this ignition cycle.
- The operating conditions at the time of the failure.

Common OBD Terms

Diagnostic

When used as a noun, the word diagnostic refers to any on-board test run by the vehicle's Diagnostic Management System. A diagnostic is simply a test run on a system or component to determine if the system or component is operating according to specification.

Enable Criteria

The term “enable criteria” is engineering language for the conditions necessary for a given diagnostic test to run. Each diagnostic has a specific list of conditions which must be met before the diagnostic will run. “Enable criteria” is another way of saying “conditions required”.

Trip

Technically, a trip is a key on-run-key off cycle in which all the enable criteria for a given diagnostic are met, allowing the diagnostic to run. Unfortunately, this concept is not quite that simple. A trip is official when all the enable criteria for a given diagnostic are met. But because the enable criteria vary from one diagnostic to another, the definition of trip varies as well. Some diagnostic are run when the vehicle is at operating temperature, some when the vehicle first start up; some require that the vehicle be cruising at a steady highway speed, some run only when the vehicle is idle. Some run only immediately following a cold engine start-up.

A trip then, is defined as a key on-run-key off cycle in which the vehicle was operated in such a way as to satisfy the enables criteria for a given diagnostic, and this diagnostic will consider this cycle to be one trip. However, another diagnostic with a different set of enable criteria (which were not met) during this driving event, would not consider it a trip. No trip will occur for that particular diagnostic until the vehicle is driven in such a way as to meet all the enable criteria.

Diagnostic Information

The diagnostic charts and functional checks are designed to locate a faulfy circuit or component through a process of logical decisions. The charts are prepared with the requirement that the vehicle functioned correctly at the time of assembly and that there are not multiple faults present.

There is a continuous self-diagnosis on certain control functions. This diagnostic capability is complemented by the diagnostic procedures contained in this manual. The language of communicating the source of the malfunction is a system of diagnostic trouble codes. When a malfunction is detected by the control module, a diagnostic trouble code is set and the Malfunction Indicator Lamp (MIL) is illuminated.

Data Link Connector (DLC)

The provision for communication with the control module is the Data Link Connector (DLC). It is located at near the A post of driver side. The DLC is used to connect to a scan tool. Some common uses of the scan tool are listed below:

- Identifying stored Diagnostic Trouble Codes (DTCs).
- Clearing DTCs.
- Reading serial data.

Decimal/Binary/Hexadecimal Conversions

All scan tool manufacture will display a variety of vehicle information which will aid in repairing the vehicle. Some scan tools will display encoded messages which will aid in determining the nature of the concern. The method of encoding involves the use of a two additional numbering systems: Binary and Hexadecimal.

The binary number system has a base of two numbers. Each digits is either a 0 or a 1. A binary number is an eight digit number and is read from right to left. Each digit has a position number with the farthest right being the 0 position and the farthest left being the 7 position. The 0 position, when displayed by a 1, indicates 1 in decimal.

Each position to the left is double the previous position and added to any other position values marked as a 1.

A hexadecimal system is composed of 16 different alpha numeric characters. The alpha numeric characters used are numbers 0 through 9 and letters A through F. The hexadecimal system is the most natural and common approach for scan tool manufactures to display data represented by binary numbers and digital code.

Verifying Vehicle Repair

Verification of vehicle repair will be more comprehensive for vehicle with OBD system diagnostic. Following a repair, the technician should perform the following steps:

1. Review and record the Fail Records for the DTC which has been diagnosed.
2. Clear DTC (s).
3. Operate the vhicle within conditions noted in the Fail Records.
4. Monitor the DTC status information for the specific DTC which has been diagnosed until the diagnostic test associated with that DTC runs.

Following these steps are very important in verifying repairs on OBD systems. Failure to follow these steps could result in unnecessary repairs.

ON-BOARD DIAGNOSTIC (OBD) System Check

OBD System should be checked as follows:

1. When Ignition key is turned from the “OFF” to the “ON” position, make sure that MIL is lit for 0.3 sec. to 0.8 sec.
2. Connect Scan Tool and check to see if MIL is always lit.

   If so, OBD System is normal.

READING DIAGNOSTIC TROUBLE CODES USING A TECH 2 OR OTHER SCAN TOOL

The procedure for reading diagnostic trouble codes is to be used a diagnostic scan tool. When reading DTCs, follow instructions supplied by tool manufacturer.

Clearing Diagnostic Trouble Codes

IMPORTANT: Do not clear DTCs unless directed to do so by the service information provided for each diagnostic procedure. When DTCs are cleared, the Freeze Frame and Failure Record data which may help diagnose an intermittent fault will also be erased from memory.

If the fault that caused the DTC to be stored into memory has been corrected, the Diagnostic Executive will begin to count the “warm-up” cycles with no further faults detected, the DTC will automatically be cleared from the Engine Control Module (ECM) memory.

To clear Diagnostic Trouble Codes (DTCs), use the diagnostic scan tool “clear DTCs” or “clear Information” function. When clearing DTCs follow instructions supplied by the tool manufacturer.

When a scan tool is not available, DTCs can also be cleared by disconnecting one of the following sources for at least thirty (30) seconds.

NOTE: To prevent system damage, the ignition key must be “OFF” when disconnecting or reconnecting battery power.

- The power source to the control module. Examples: fuse, pigtail at battery ECM connectors etc.
- The negative battery cable. (Disconnecting the negative battery cable will result in the loss of other on-board memory data, such as preset radio tuning).

Tech 2 Scan Tool

From 98 MY, Isuzu Dealer service departments are recommended to use Tech 2. Refer to Tech 2 scan tool user guide.

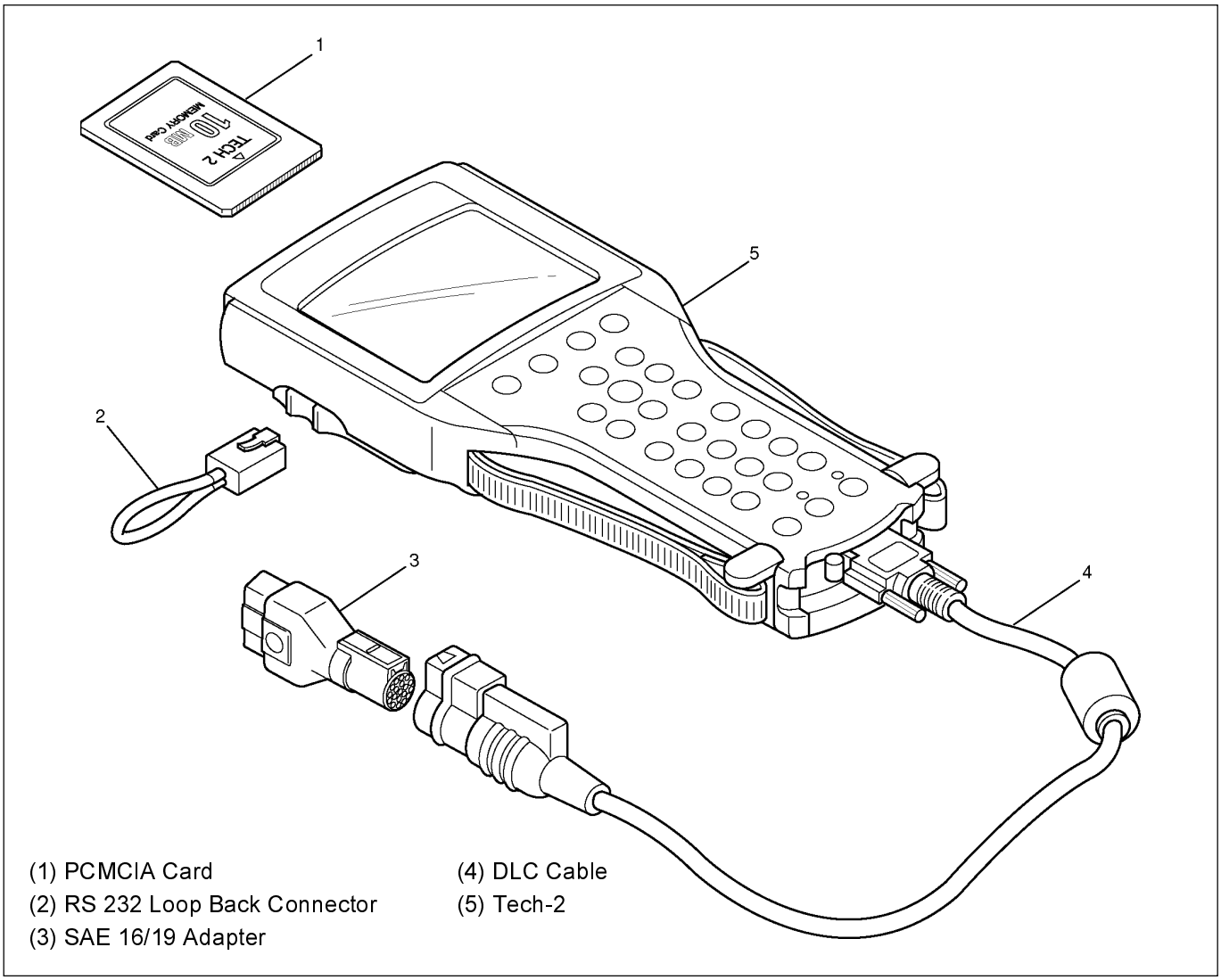

(1) PCMCIA Card
(2) RS 232 Loop Back Connector
(3) SAE 16/19 Adapter
(4) DLC Cable
(5) Tech-2

901RW180.tif

Getting Started

- Before operating the Isuzu PCMCIA card with the Tech 2, the following steps must be performed:
  1. The Isuzu 98 System PCMCIA card (1) inserts into the tech 2 (5).
  2. Connect the SAE 16/19 adapter (3) to the DLC cable (4).
  3. Connect the DLC cable to the Tech 2 (5).
  4. Make sure the vehicle ignition key is off.
  5. Connect the Tech 2 SAE 16/19 adapter to the vehicle ALDL/DLC.
  6. The vehicle ignition turns on.
  7. Verify the Tech 2 power up display.

012RW105.tif

NOTICE: The RS232 Loop back connector is only to use for diagnosis of Tech 2 and refer to user guide of the Tech 2.

Operating Procedure (For example)

The power up screen is displayed when you power up the tester with the Isuzu systems PCMCIA card. Follow the operating procedure below.

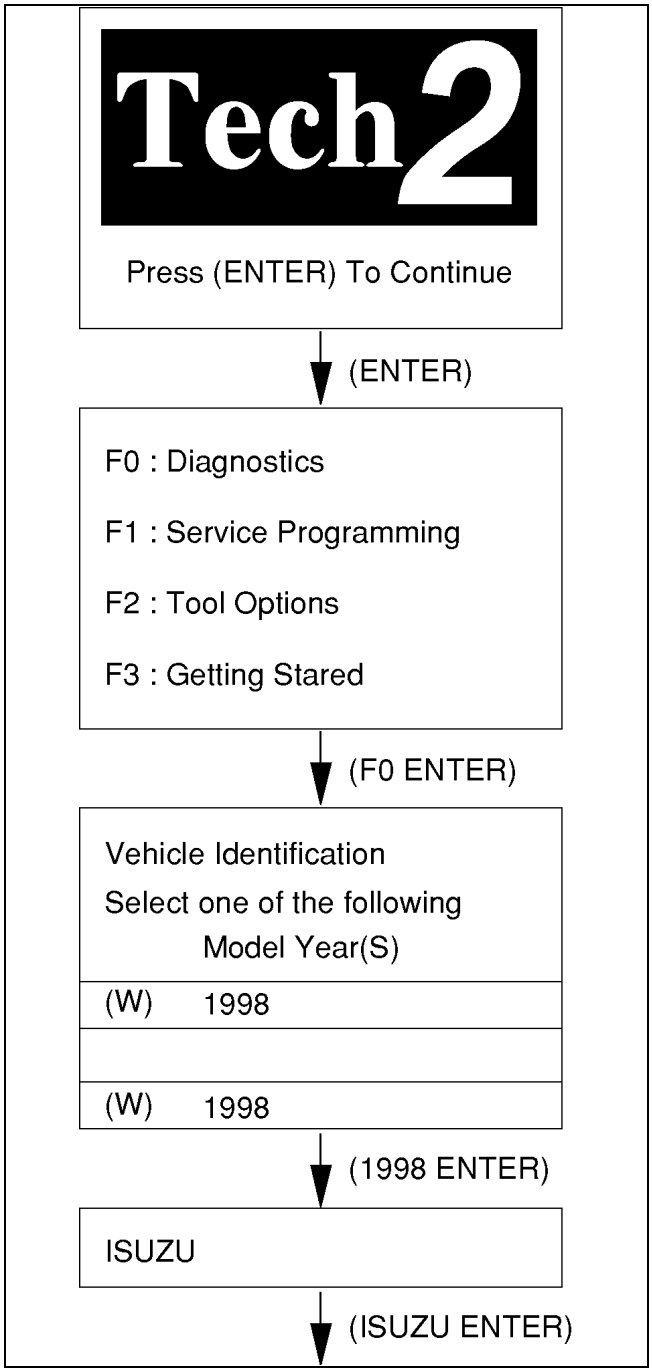

065LW043.tif

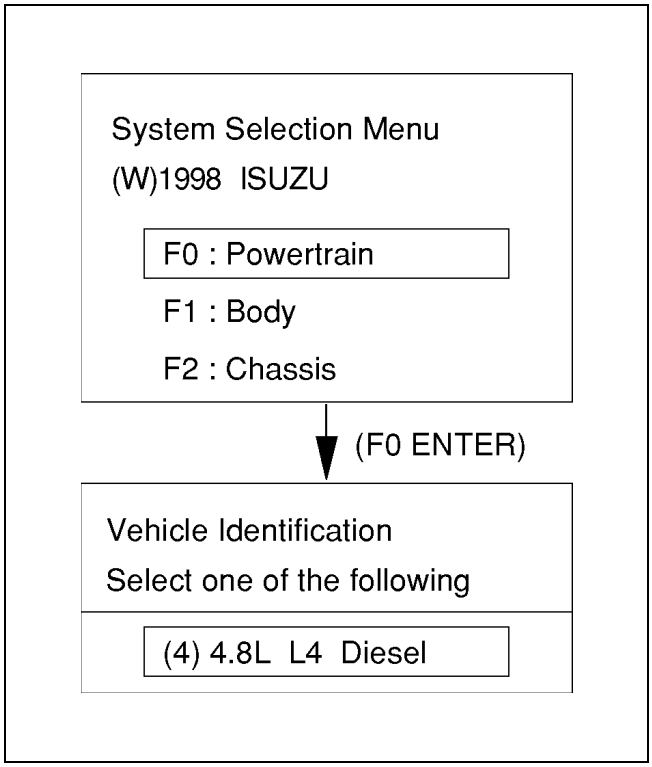

065LW044.tif

- The following table shows, which functions are used the available equipment versions.

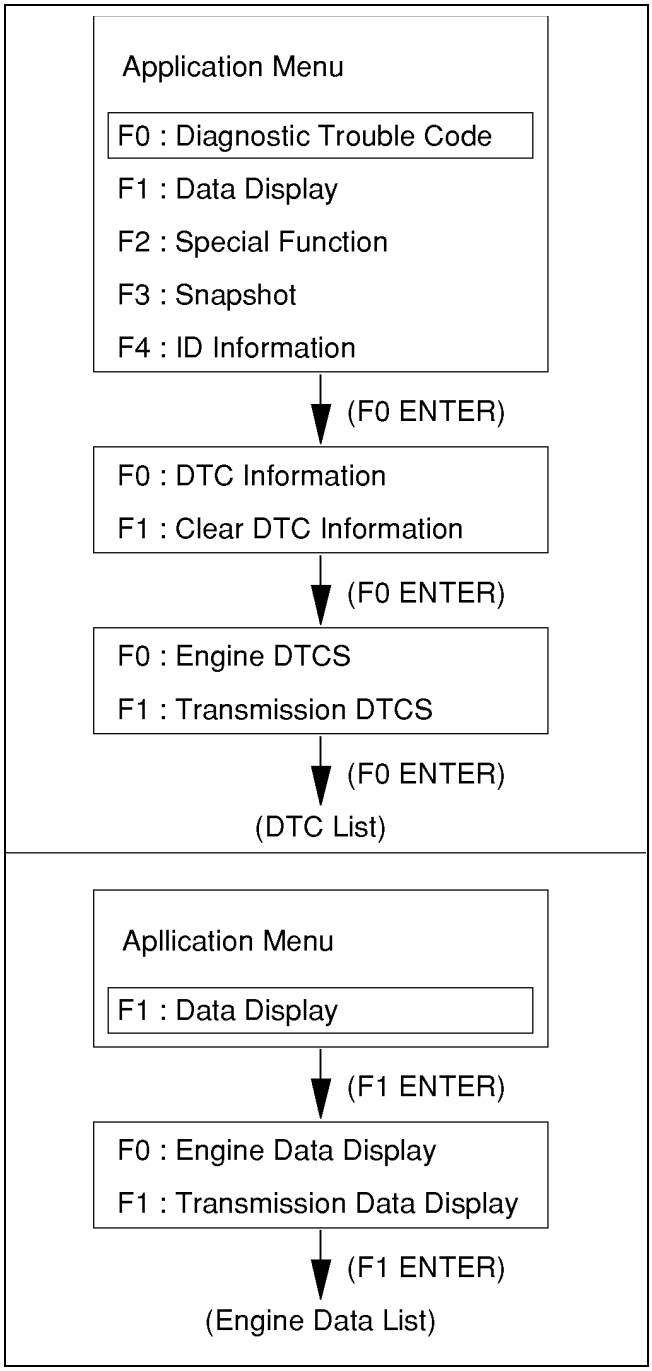

065LW045.tif

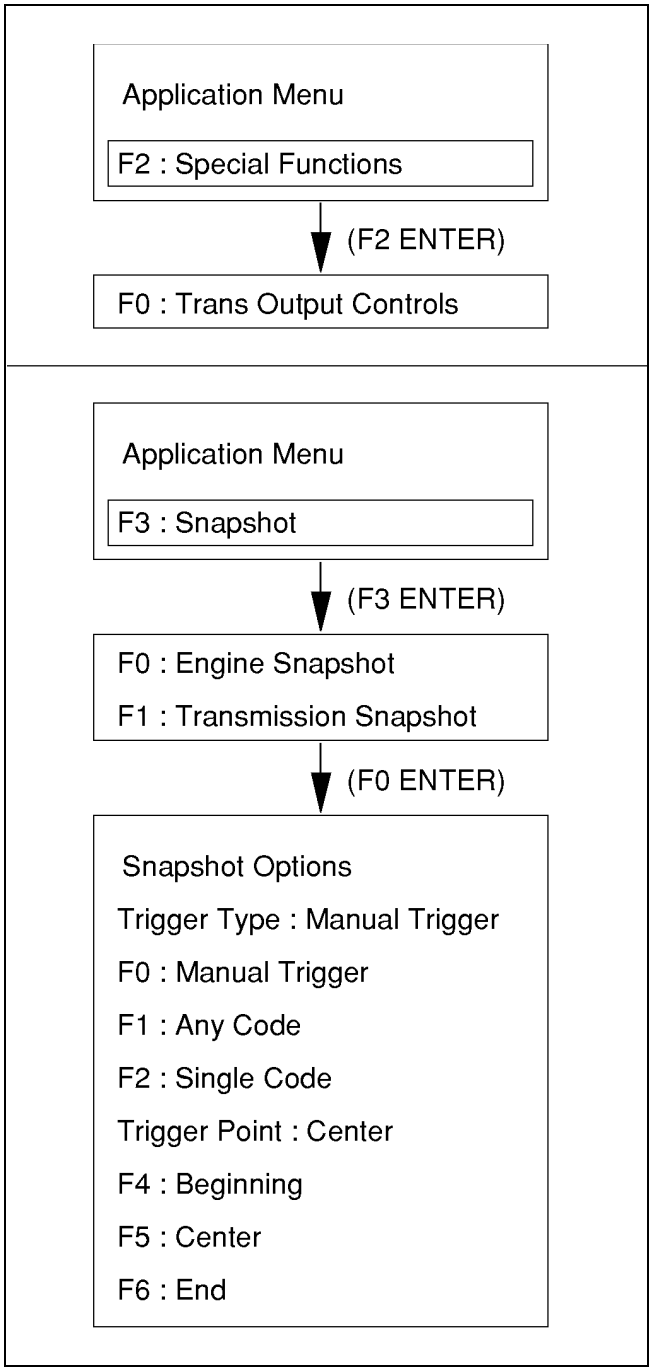

065LW046.tif

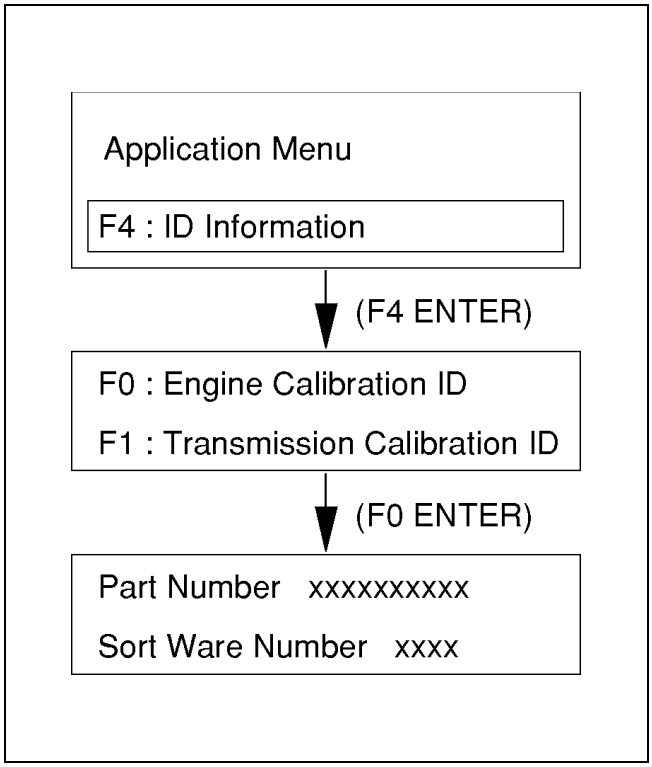

065LW047.tif

TYPICAL SCAN DATA VALUES

Use the Typical Scan Data Values Table only after the On-Board Diagnostic System Check has been completed, no diagnostic trouble codes were noted, and you have determined that the on-board diagnostics are functioning properly. Scan tool values from a properly-running engine may be used for comparison with the engine you are diagnosing. The typical scan data values represent values that would be seen on a normally-running engine.

Note: A scan tool that displays faulty data should not be used, and the problem should be reported to the scan tool manufacturer. Use of a faulty scan tool can result in misdiagnosis and unnecessary replacement of parts.

Only the parameters listed below are referred to in this service manual for use in diagnosis. For further information on using the scan tool to diagnose the engine control module and related sensors, refer to the applicable reference section listed below. If all values are within the typical range described below, refer to the symptoms section for diagnosis.

Test Conditions

Engine running, lower radiator hose hot, transmission in park or neutral, closed loop, accessaries off, brake not applied and air conditioning off.

DATA LIST (TYPICAL DATA)

TECH 2 STRING		TYPICAL DATA VALUES (IDLE)
Ignition Switch	(On/Off)	On
Starter Switch	(On/Off)	Off
Exhaust Break Switch	(On/Off)	Off
Transmission Gear Position Switch		N.2.3.4.5.6 (M/T only)
Transmission Spec. Select Switch	(AT/MT)	Automatic Trans
Engine Spec. Select Switch	(S/N)	S
IAT Switch	(Yes/No and High/Low)	High
EGR/VSS System	(Yes/No)	Yes
Rack Sensor Voltage	(V)	1.0
Engine Coolant Temp	(V)	2.6
Engine Coolant Temp	*F(°C)	89.6 (32)
Engine Speed	(rpm)	800
Barometric Pressure	(V)	2.9
Barometric Pressure	(mmHg)	761

TROUBLESHOOTING

Caution taken in inspecting

(1) In inspecting system, write down self-diagnosis code to be indicated. (especially, when plural self-diagnosis codes are indicated.)

(2) Before eliminating the indicated self-diagnosis codes by a memory clear switch, doubly inspect abnormal place as indicated in self-diagnosis code. (Self-diagnosis code means 'Warning.' Make sure to inspect abnormal section.)

Inspection procedure flowchart

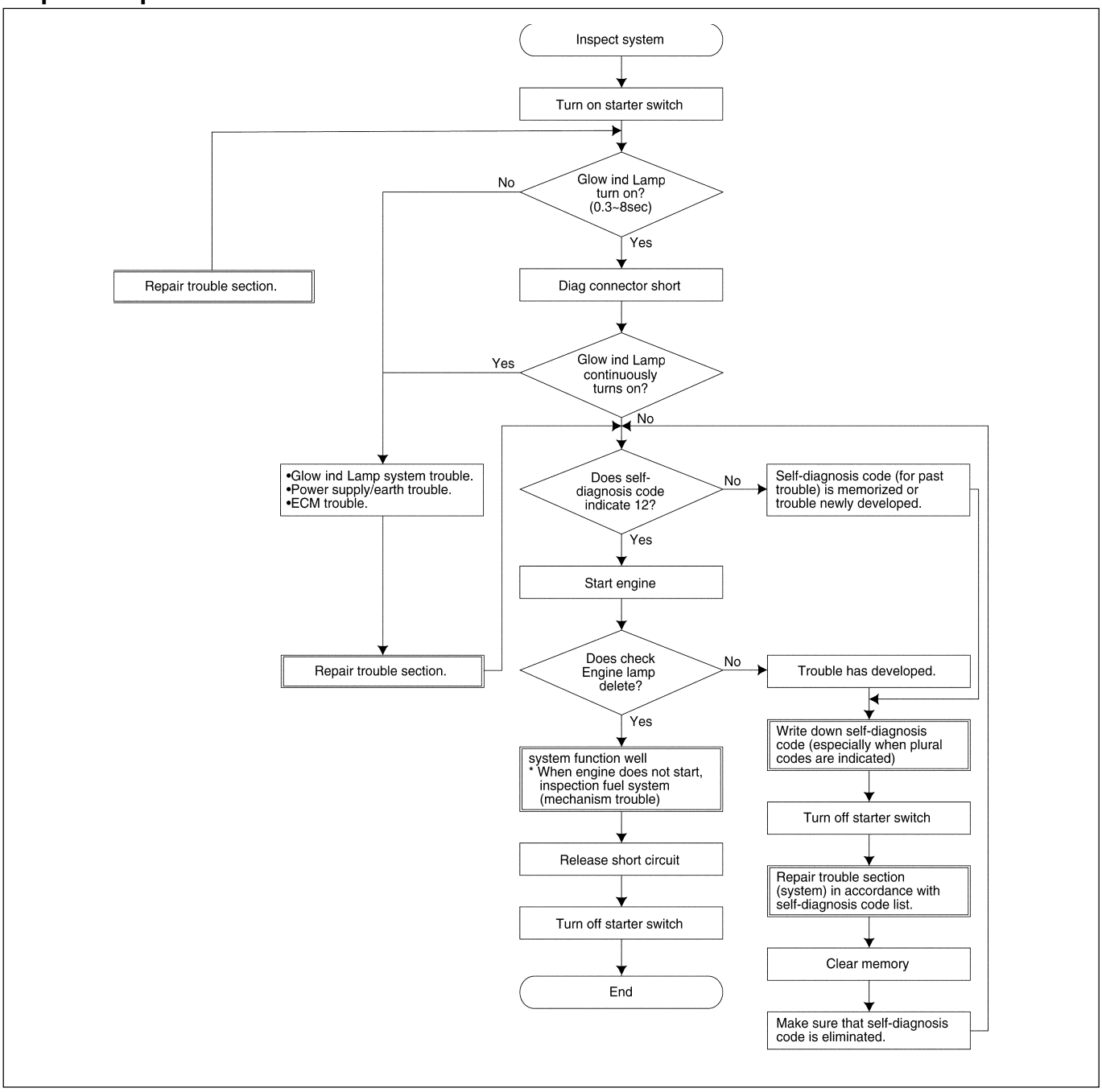

Flowchart1 3-2.tif

NOTE:

Please note that some items of self-diagnosis code may not be generated unless the engine is warmed up or unless the vehicle is driven under load.

SELF-DIAGNOSIS FUNCTIONS

(1) Memorization of self-diagnosis code

The self-diagnosis code indicated will be memorized in Electronically Erasable Programmable Read Only Memory (EEPROM) with in the Engine Control Module (ECM). Accordingly even if the starter switch turns off or the ECM is removed from the vehicle, the memorized self-diagnosis code will not be eliminated.

* Unless an elimination procedure is taken, the self-diagnosis code will remain in memory. (The memory will be eliminated only by a memory clear switch.)

(2) Elimination of self-diagnosis code

The self-diagnosis code memorized in the EEPROM with in the ECM can be eliminated only by Scan Tool or the operation of the memory clear switch.

The elimination method memory clear switch will be described below:

1. Turn OFF ignition switch.
2. Use 4.7kΩ resistance and make short circuit on memory clear switch.
3. Turn ON ignition switch. The indication lamp turn on (lighting) continuously after three seconds flashing the indication lamp.
4. Turn OFF ignition switch.
5. Remove shortage resistance from memory clear switch.

15-1. Location of the memory clear switch

Location of the memory clear switch (DATA LINK CONNECTOR)

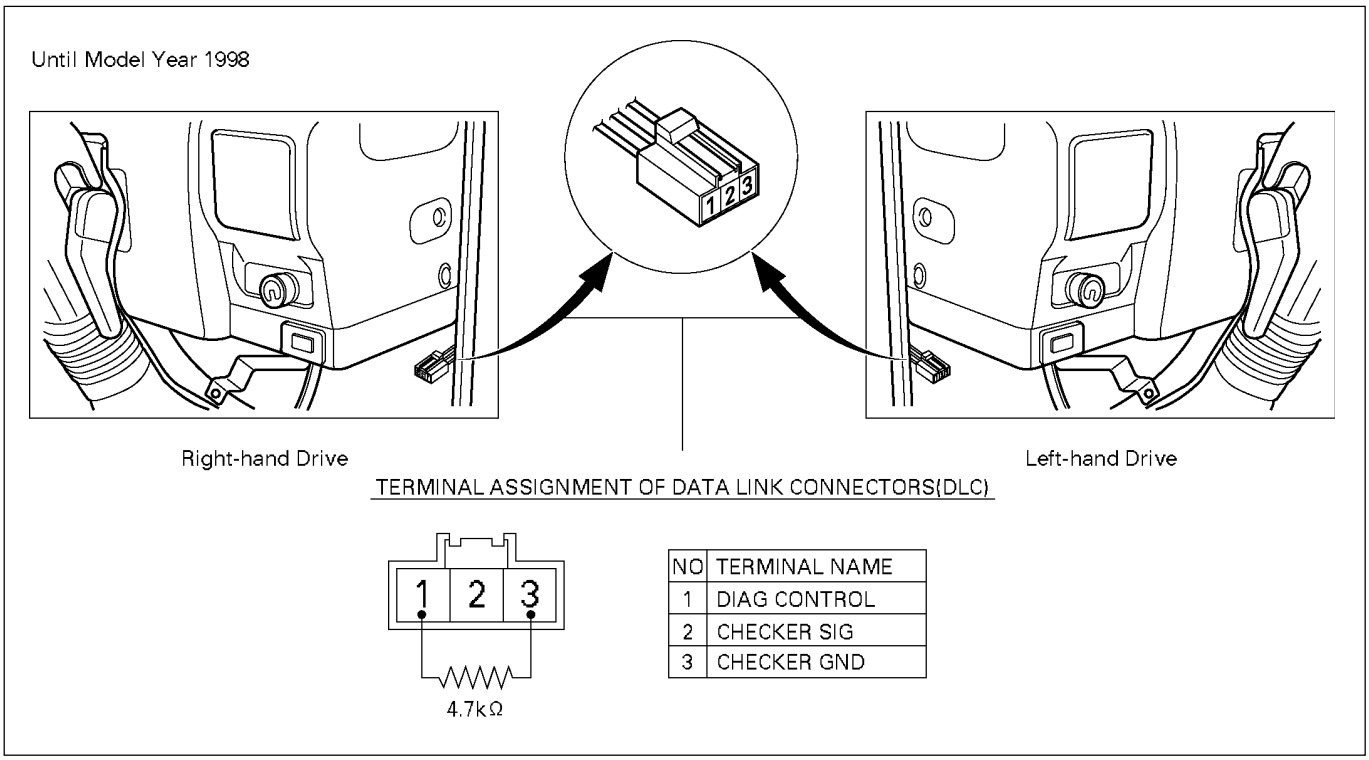

NO	TERMINAL NAME
1	DIAG CONTROL
2	CHECKER SIG
3	CHECKER GND

056LX009.tif

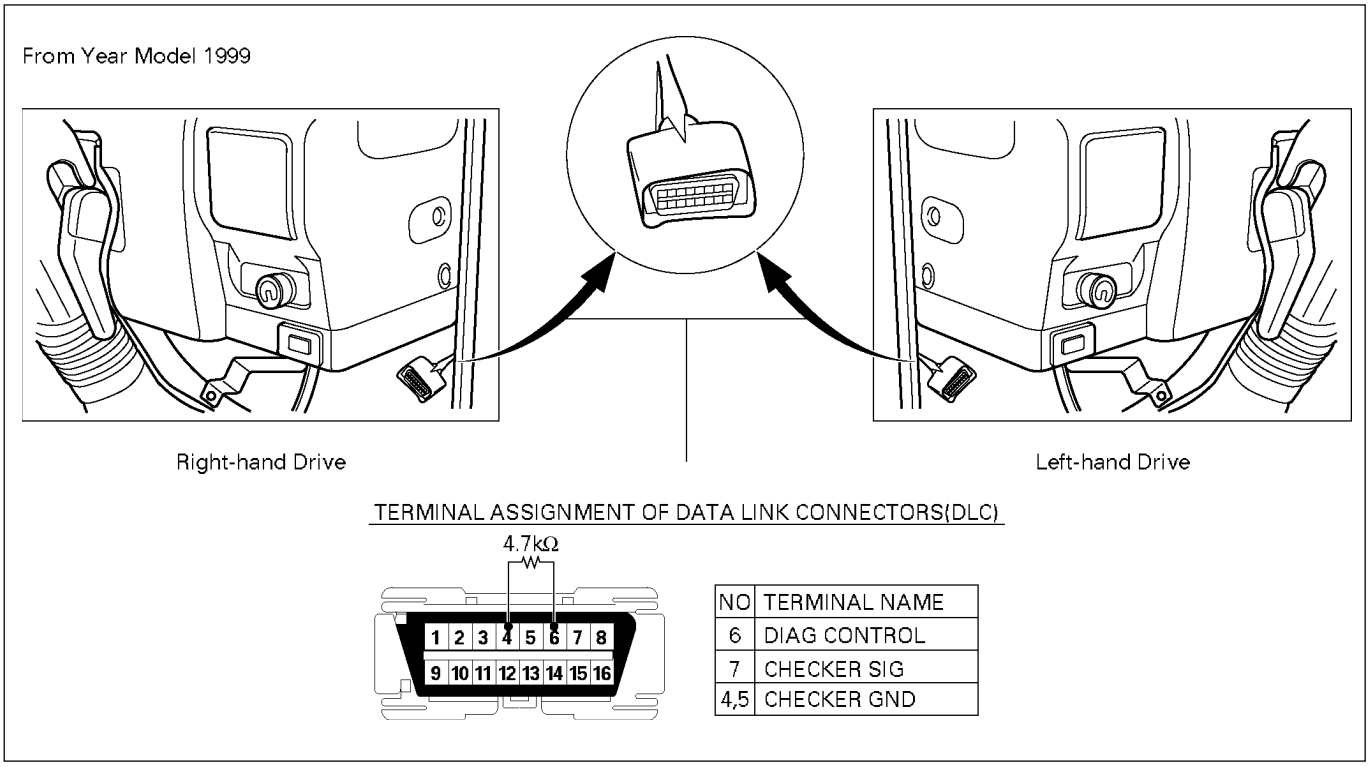

056LX006.tif

How to read flashing of the indicator lamp:

The two-digit self-diagnosis code flashes starting from ten's figure to indicate the self-diagnosis code.

Please read the self-diagnosis code from the flashing.

If the plural self-diagnosis codes are indicated, the same self-diagnosis code is flashed repeatedly in steps of three times.

Please read it correctly.

- Diagnostic Trouble Code (DTC) outputting is done in decreasingly order of DTC number.
- Indication is changed over on completion of output DTC indication.
- DTC indicator is stopped with diagnostic switch being off.
- When there is no DTC output, "1" is outputted in normal DTC code.
- After indicating 3 times pear 1 DTC, shift is conducted to the next DTC. (After making a round, the indications are repeated again.)
- In case of the same diagnostic code, it is used 1 DTC (3 times indication.)

Example Diagnosis Trouble Code Output

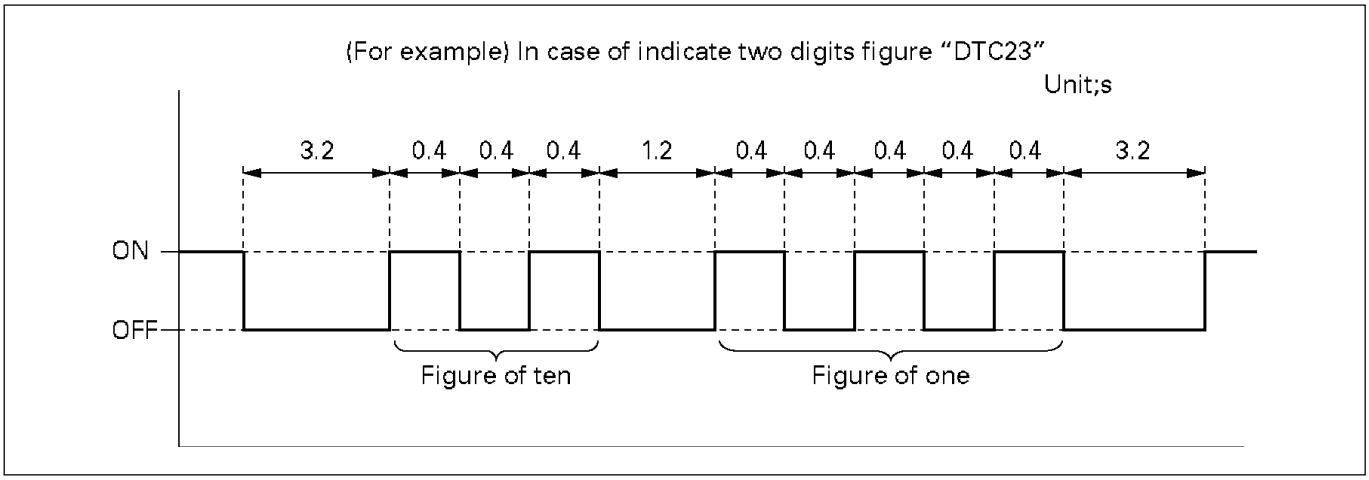

826LW012.tif

Flashing of Indicator Lamp

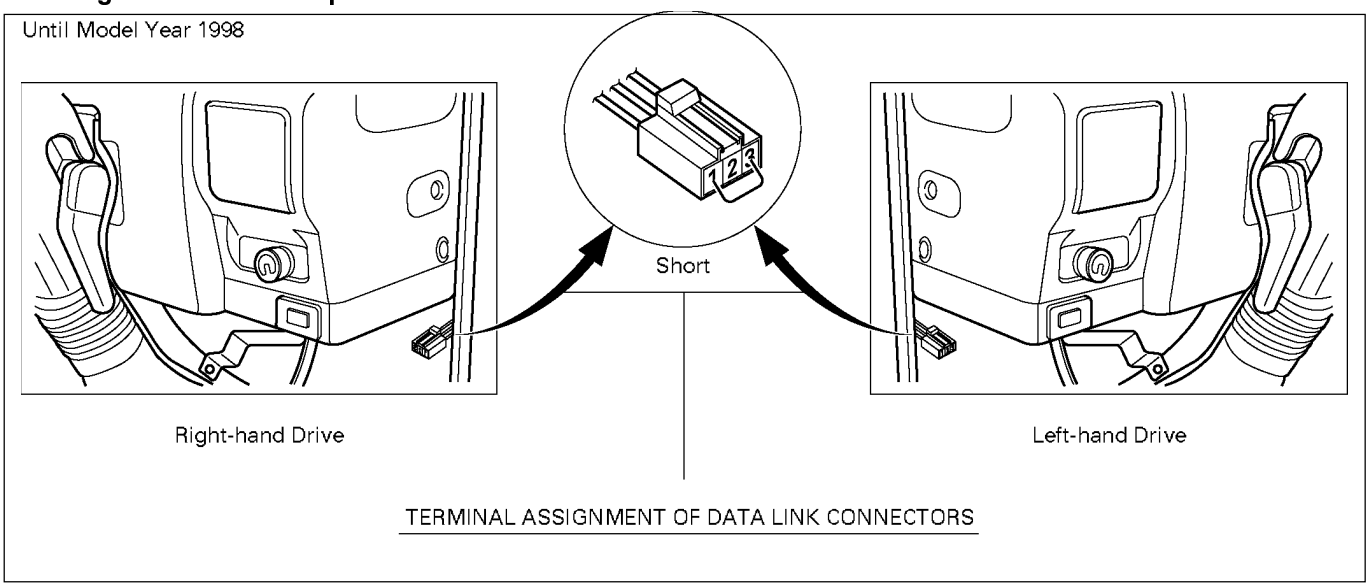

056LX015.tif

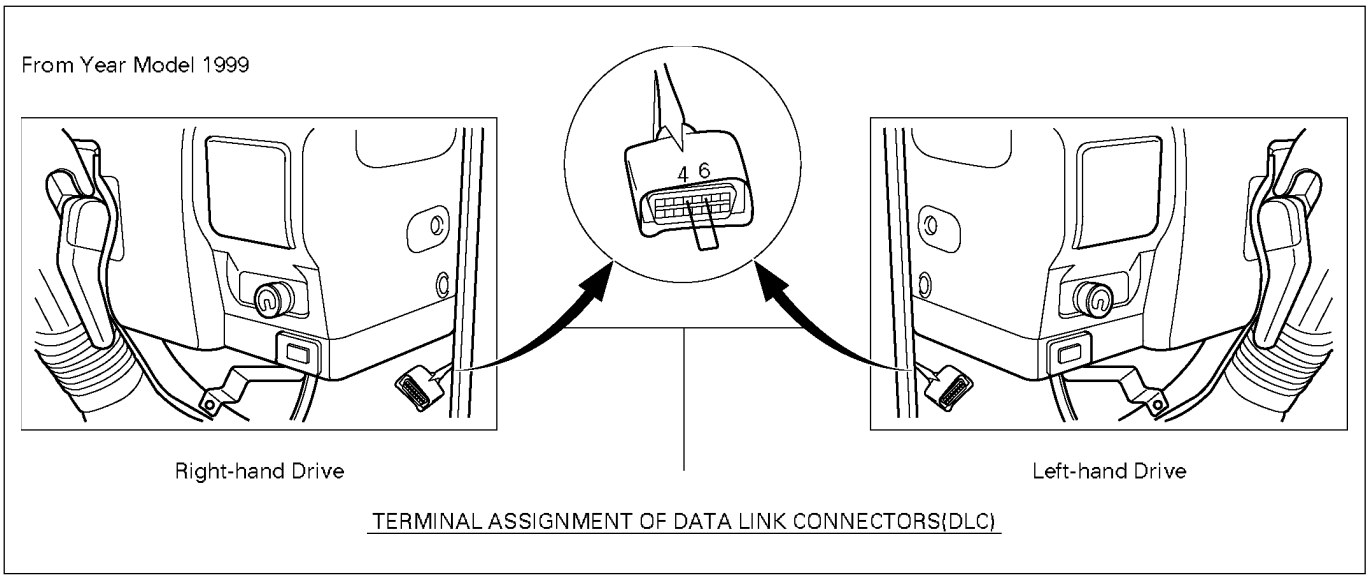

056LX014.tif

DIAGNOSIS TROUBLE CODE LIST

DTC#	TECH 2 STRING
P21	Rack Sensor Circuit Low
P22	Rack Sensor Circuit High
P13	Engine Coolant Temperature (ECT) Sensor Circuit High
P14	ECT Sensor Circuit Low
P31 *	Exhaust Gas Recirculation (EGR) Electronic Vacuum Regulating Valve (EVRV) Solenoid Circuit Low
P32 *	EGR EVRV Solenoid Circuit High
P41	Quick On Start (QOS) Relay Control Circuit Low
P42	QOS Relay Control Circuit High
P23	Magnetic Switch Control Circuit Low
P24	Magnetic Switch Control Circuit High
P26	Quick Warm System (QWS) Relay Control Circuit High
P33 *	Variable Swirl System (VSS) Control Circuit Low
P34 *	VSS Control Circuit High
P43	Aneroid Compensator Vacuum Switching Valve (VSV) Control Circuit Low
P35 *	EGR Quick Cut VSV Control Circuit Low
P36 *	EGR Quick Cut VSV Control Circuit High
P44	Aneroid Compensator VSV Control Circuit High
P45	Engine Speed Sensor Circuit Low
P61	Barometric Sensor Circuit Error
P52	Electronically Erasable Programmable Read Only Memory (EEPROM) Error

* Equipped with EGR and VSS

Error Classified		Trouble Code	Diagnostic Condition	Return Condition	Back Up	Judging Time
Relay: QWS	+B short	P26	Output TR Monitor	When forward normal	QWS: R/L Non-Continuity.	0.52 sec
VSV: VSS	Harness Open GND short	* P33	Output TR Monitor	When forward normal	VSS: VSV Output stop.	0.52 sec
	+B short	* P34				
VSV: ANECON	Harness Open GND short	P43	Output TR Monitor	When forward normal	ANECON: VSV Output stop.	0.52 sec
	+B short	P44				
VSV: EGR Quick	Harness Open GND short	* P35	Output TR Monitor	When forward normal	EVRV: EGR VSV: EGR Quick Cut The above output stops.	0.52 sec
	+B short	* P36				
Atmospheric Pressure Sensor	Output Abnormal	P61	1.5V (374mmHg) or lower, or 4.5V (1200mmHg) or higher detected.	When forward normal	EVRV: EGR VSV: EGR Quick Cut The above output stops. ANECON: VSV is actuated.	0.52 sec
	ECM EEPROM error	P61	Check when ECM is started and when Trouble Code is written.	When forward normal	Trouble Code other than 52 (EEPROM error) not indicated.	

Error Classified		Trouble Code	Diagnostic Condition	Return Condition	Back Up	Judging Time
Normal		P12	No other trouble code.		No history of this diagnosis recorded	-
Rack Sensor	Harness Open GND short	P21	Rack Voltage 0.3V or lower, Engine speed 600~900rpm, and water Temp. 0°C or higher are detected for 3 sec running.	When forward normal	EVRV: EGR VSV: EGR Quick Cut VSV: VSS The above outputs stop. R/L: QWS Non-continuity Idle position output stop. The above outputs stop. Rack Learning valve: 0	3.52 sec
Rack Sensor	+5V short Rack Sensor Power Voltage	P22	5V or higher Rack Voltage detected.			0.52 sec
Water Temp Sensor	Harness Open +B short	P13	-79°C (390kΩ) or lower, or 120°C (115kΩ) or higher detected.	When forward normal	EVRV: EGR VSV: EGR Quick Cut VSV: VSS MV: Timing Advance The above outputs stop. VSV: ANECON is actuated QOS: 0°C or lower control	0.52 sec
Water Temp Sensor	GND short	P14				
EVRV: EGR	Harness Open GND short	* P31	Output TR Monitor	When forward normal	EVRV: EGR VSV: EGR Quick Cut The above outputs stop.	1.57 sec
EVRV: EGR	+B short	* P32				
Relay QOS	Harness Open GND short	P41	Output TR Monitor	When forward normal	QOS: RL Non-continuity	0.52 sec
Relay QOS	+B short	P41				
Magnetic Volume Timing	Harness Open	P23	Output TR Monitor	When forward normal	Timing Advance: MV output stop.	0.52 sec
Magnetic Volume Timing	GND short +B short	P24				
	Harness Open GND short	P45	Engine speed 0, Rack Voltage ≥ 0.3V ≤ 0.57 is detected.	When forward normal	EVRV: EGR VSV: EGR Quick Cut VSV: VSS R/L: QWS The above outputs Idling position output stop when T/M POS SW outputted. VSV: ANECON is actuated	1.52 sec

* Equipped with EGR and VSS

LOCATION OF SENSOR AND SWITCH

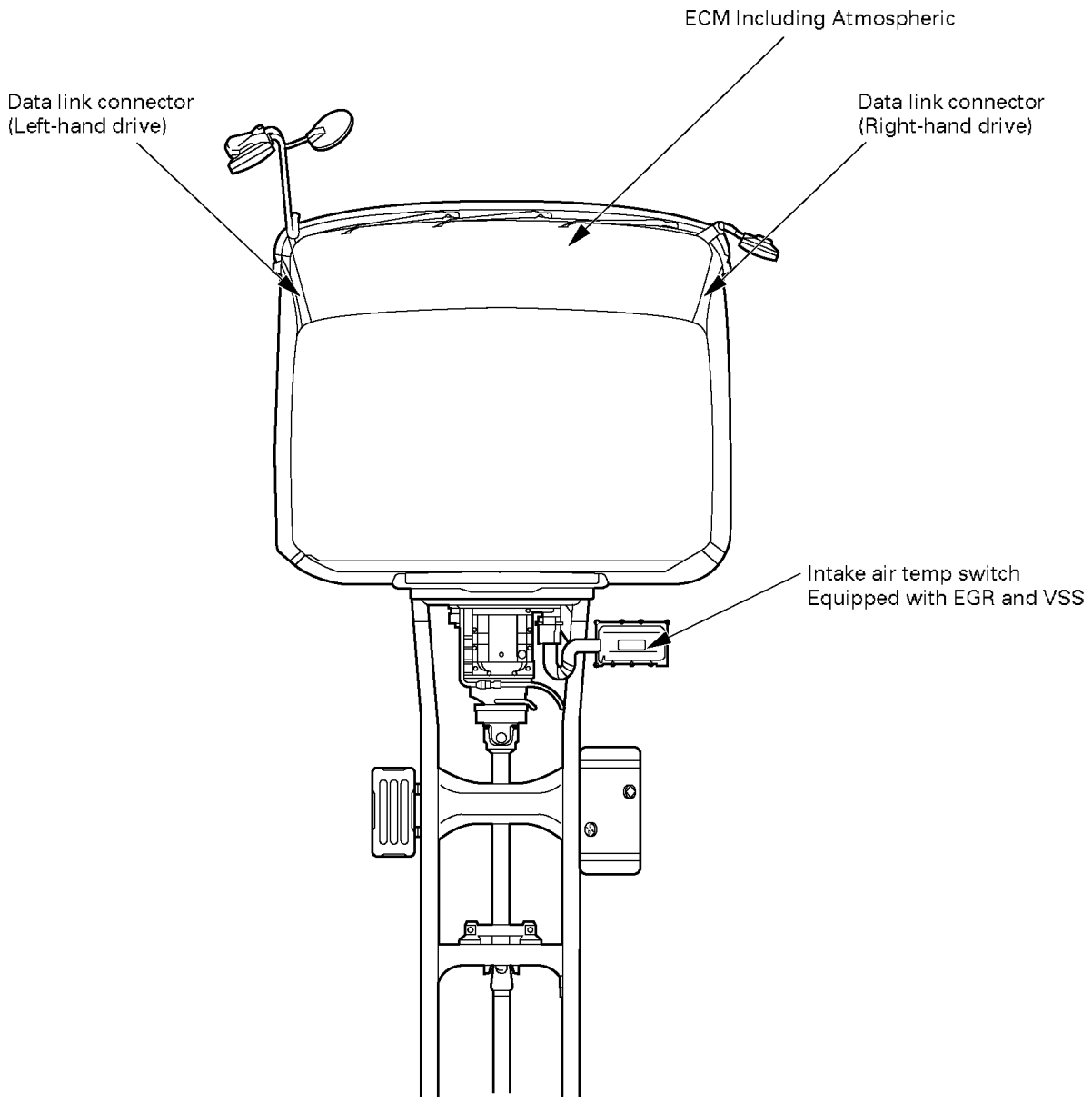

056LW033.tif

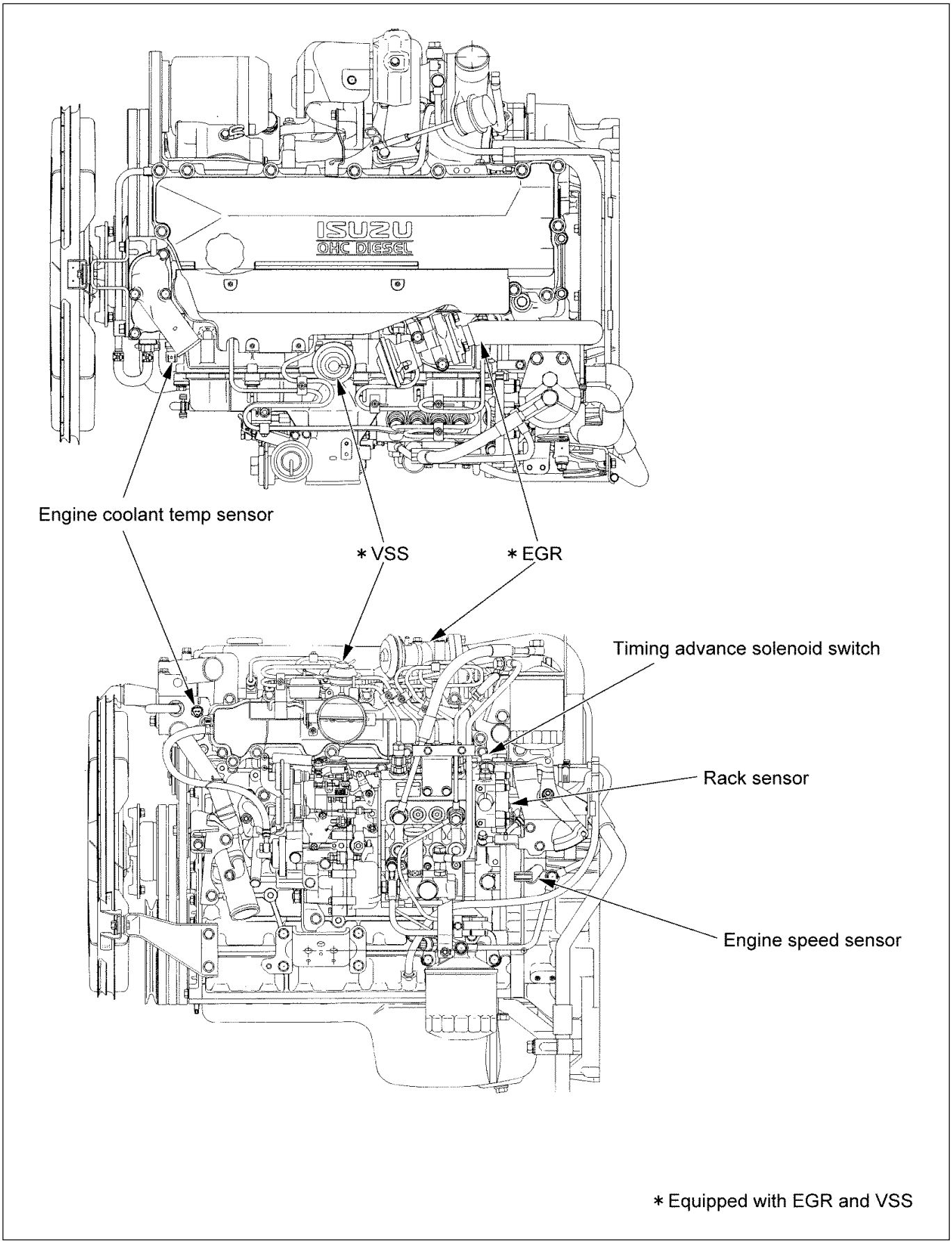

056LW035.tif

PARTS LOCATION

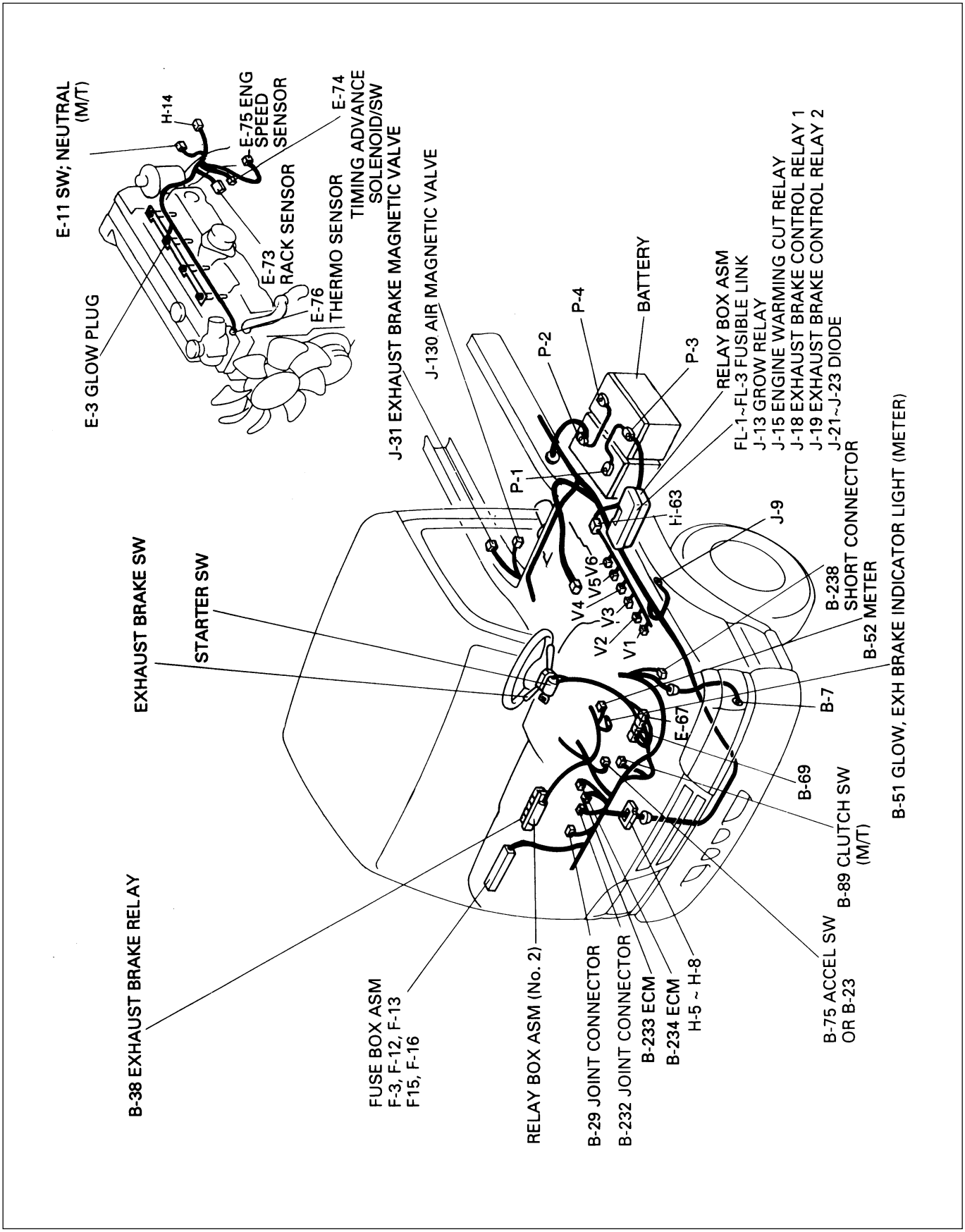

6E-32-1.tif

ENGINE CONTROL MODULE (ECM)

Appearance of ECM

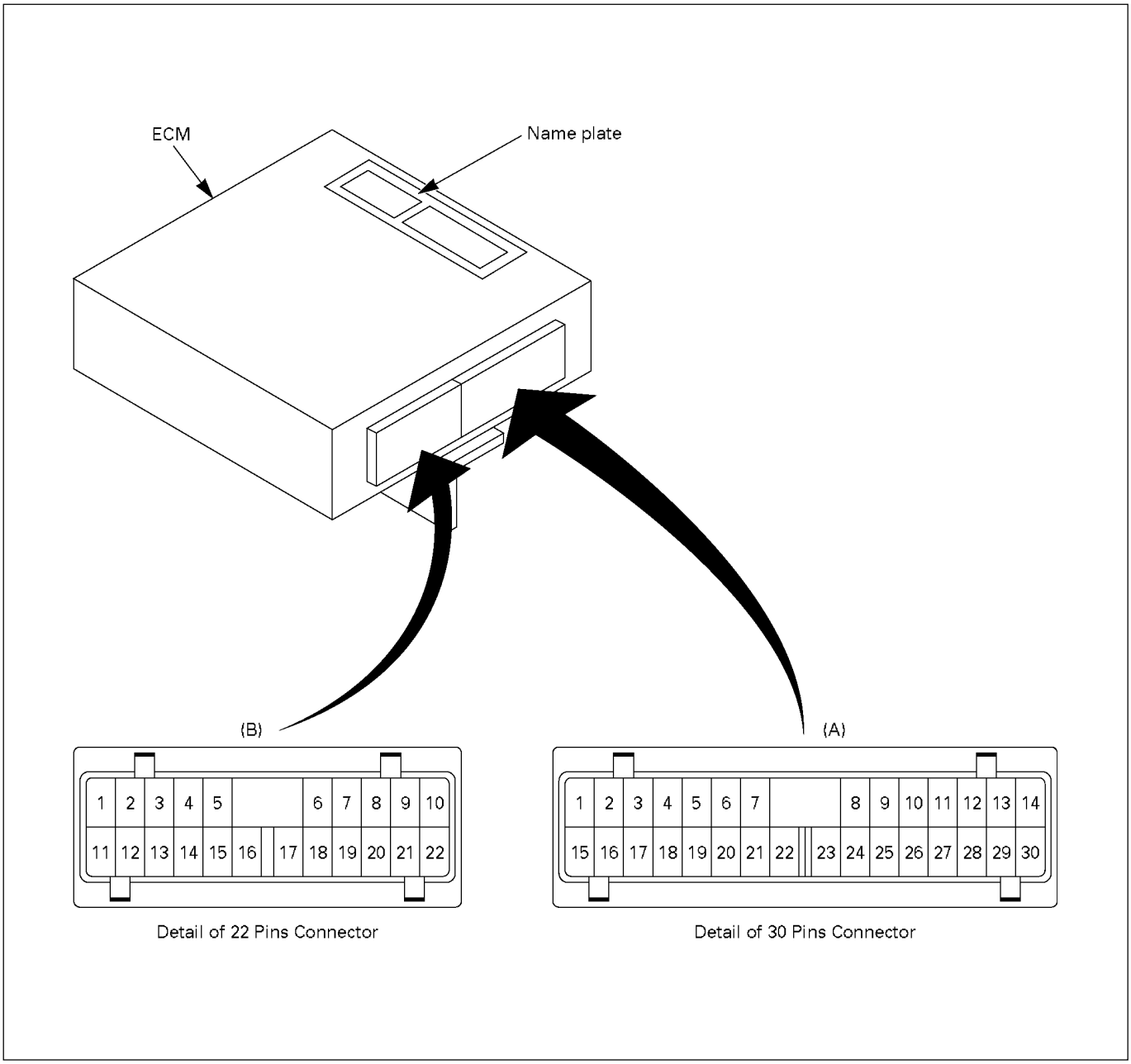

826LW006-1.tif

CHART OF ENGINE CONTROL MODULE (ECM) INPUT/OUTPUT

			Equipped without EGR and VSS		Equipped with EGR and VSS		
Connector	Connector number	Connector name	S-SPEC		N-SPEC	S-SPEC	
			M/T	A/T	M/T		A/T
Connector 30 pin	1	Checker SIG (Serial Communication)	○	○	○	○	○
	2	Intake Temperature Switch			○	○	○
	3	Engine Type			○		
	4	Not be used	-	-	-	-	-
	5	Transmission Type		○			○
	6	Rack Sensor (+5V)	○	○	○	○	○
	7	Rack Sensor SIG	○	○	○	○	○
	8	Battery (+)	○	○	○	○	○
	9	Ignition Key	○	○	○	○	○
	10	Not be used	-	-	-	-	-
	11	Timing Advance Solenoid Switch Relay	○	○	○	○	○
	12	Not be used	-	-	-	-	-
	13	Electric Vacuum Regulating Valve Power Supply	×	×	○	○	○
	14	Electric Vacuum Regulating Valve GND	×	×	○	○	○
	15	Checker GND	○	○	○	○	○
	16	Diag Control	○	○	○	○	○
	17	Not be used	-	-	-	-	-
	18	Not be used	-	-	-	-	-
	19	Not be used	-	-	-	-	-
	20	Not be used	-	-	-	-	-
	21	Rack Sensor GND	○	○	○	○	○
	22	ECM GND	○	○	○	○	○
	23	Not be used	-	-	-	-	-
	24	Not be used	-	-	-	-	-
	25	Not be used	-	-	-	-	-
	26	Not be used	-	-	-	-	-
	27	Transmission Position Switch			○		
	28	Not be used	-	-	-	-	-
	29	Not be used	-	-	-	-	-
	30	FICD Magnetic Valve Power Supply	○	○	○	○	○

Connector	Connector number	Connector name	Equipped without EGR and VSS		Equipped with EGR and VSS		
			S-SPEC		N-SPEC	S-SPEC	
			M/T	A/T	M/T		A/T
Connector 22 pin	1	EGR Cut Magnetic Valve Power Supply	×	×	○	○	○
	2	Glow Relay	○	○	○	○	○
	3	Glow Indicator Lamp	○	○	○	○	○
	4	Rack Idle Position Out Put		○			○
	5	Not be used	-	-	-	-	-
	6	Not be used	-	-	-	-	-
	7	Engine Coolant Temperature Sensor GND	○	○	○	○	○
	8	Engine Coolant Temperature Sensor SIG	○	○	○	○	○
	9	Engine Revolation Sensor GND	○	○	○	○	○
	10	Engine Revolation Sensor SIG	○	○	○	○	○
	11	VSS Magnetic Valve Power Supply	×	×	○	○	○
	12	QWS Relay	○	○	○	○	○
	13	Aneroid Compensator Magnetic Valve	○	○	○	○	○
	14	Not be used	-	-	-	-	-
	15	Not be used	-	-	-	-	-
	16	Not be used	-	-	-	-	-
	17	Not be used	-	-	-	-	-
	18	Starter Switch	○	○	○	○	○
	19	Exhaust Brake Status Switch	○	○	○	○	○
	20	Not be used	-	-	-	-	-
	21	Not be used	-	-	-	-	-
	22	Not be used	-	-	-	-	-

Note: The meaning of symbol marks are:

○ : Connect

BLANK : Not

× : Not Connect

Location of the Engine Control Module (ECM) Connector

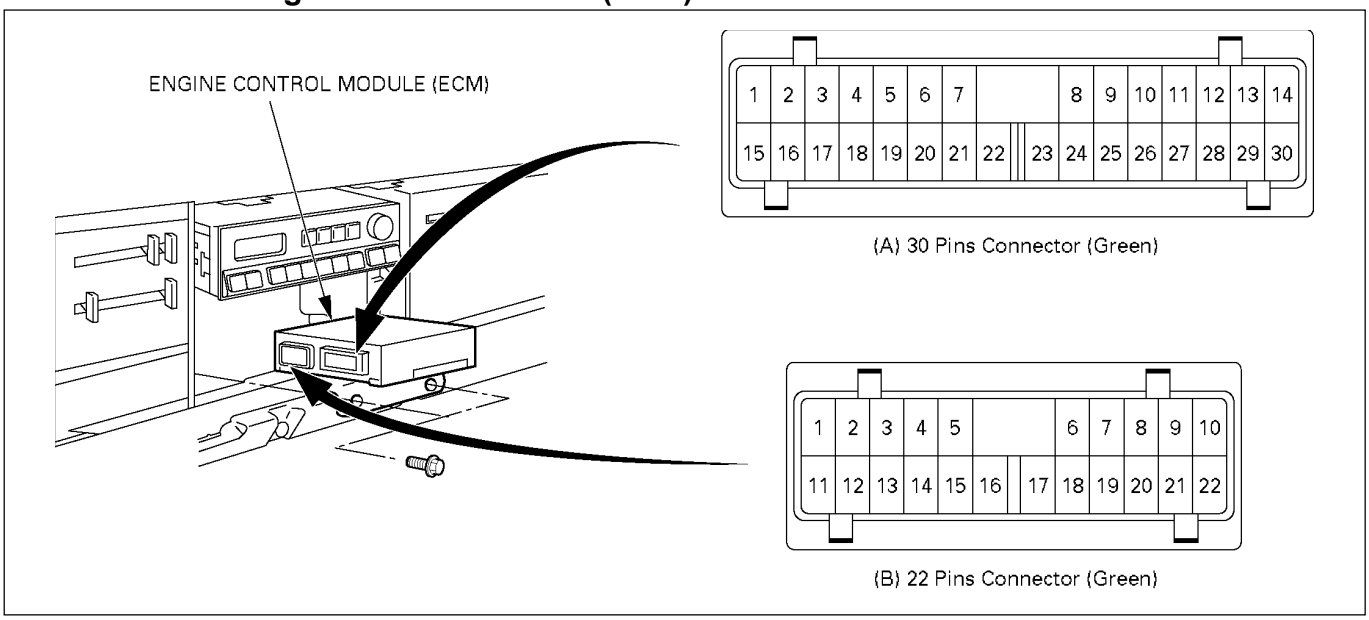

826LW008-1.tif

Location of Data Link Connector (DLC)

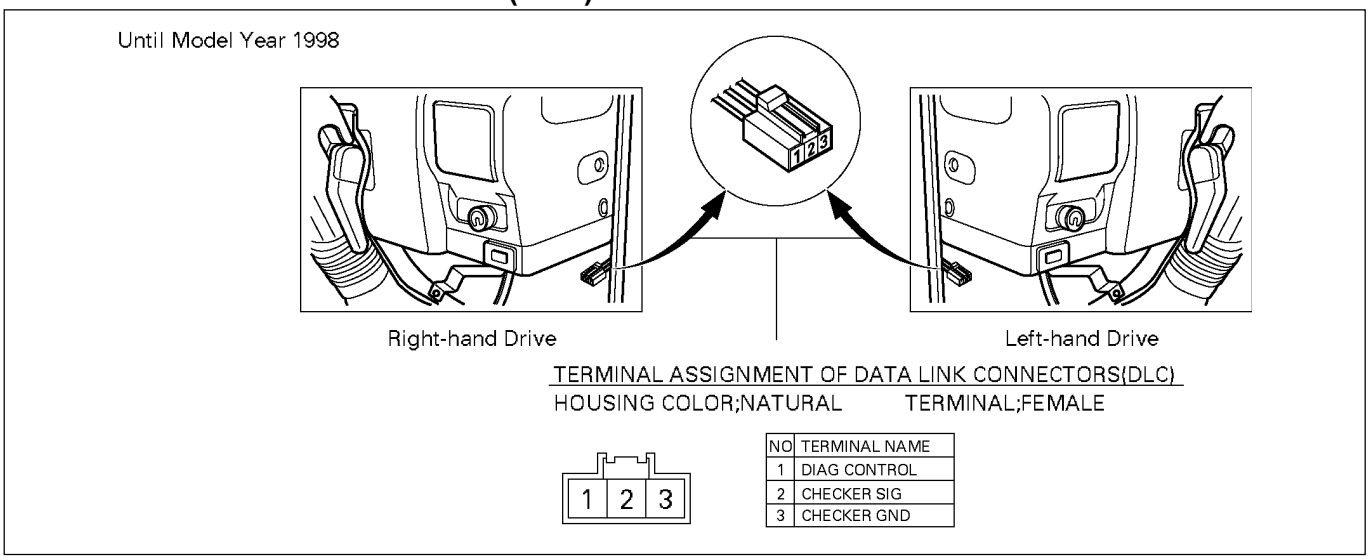

NO	TERMINAL NAME
1	DIAG CONTROL
2	CHECKER SIG
3	CHECKER GND

056LX008.tif

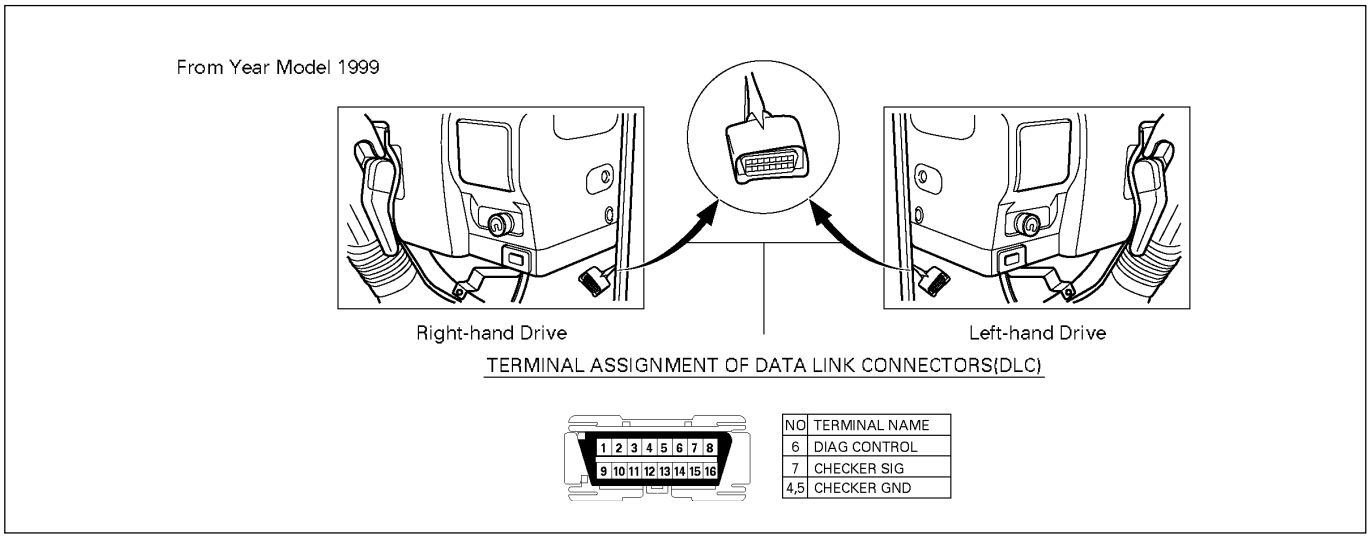

NO	TERMINAL NAME
6	DIAG CONTROL
7	CHECKER SIG
4,5	CHECKER GND

056LX010.tif

BRIEF EXPLANATION OF EMISSION AND ELECTRICAL CONTROL SYSTEM

MITICS (Mechanically Integrated Timing and Injection Control System)

The Mechanically Integrated Timing and Injection rate Control System (MITICS) utilizes mechanical control, in comparison with TICS systems, which utilize electronic control.

MITICS is equipped with the RLD-M type governor, which contains a pre-stroke control mechanism. With this, pre-stroke position (ie., beginning of static injection) can be varied to control injection timing and injection rate (i.e., the fuel injection quantity injected from the nozzle per cam angle degree).

This enables high injection rates1 in the low and medium speed ranges through a short Injection interval, thus contributing to higher engine torque and cleaner exhaust.

MITICS was developed in response to the demands of medium sized diesel engines for low cost, low fuel consumption, high output and cleaner emissions.

High injection rates using a short injection interval.

- The speed at which the injection pump plunger rises slows as engine speed decreases and the pressure inside the injection pipe decreases.

  Because of this, the nozzle spray deteriorates and makes it impossible to obtain the proper fuel - air mixture.

  To obtain the proper mixture at low and medium speeds, it is necessary to increase the pressure inside the injection pipes using a short injection interval.

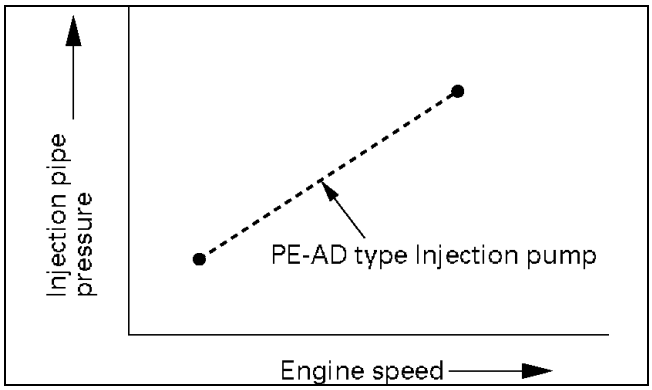

040LW006.tif

- The left hand figure shows plunger speed and cam lift in relation to cam angle. It can be seen from the graph that plunger speed increases together with cam lift.

  MITICS varies the beginning of injection position at low and medium speeds so that injection occurs when the plunger speed increases during the latter half of cam lift (shown by the bold line).

  At high speeds, injection is performed when the plunger speed decreases during the first half of cam lift to prevent an excessive increase in injection pipe pressure.

  This enables high pressures at low and medium speeds with a fast plunger speed. Thus, a fine fuel oil spray is injected into the cylinder from the nozzles within a short time to provide the proper mixture for combustion, helping to increase torque and keep exhaust emissions clean.

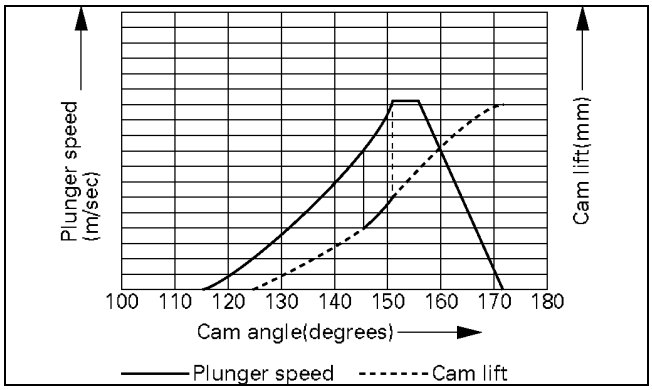

040LW007.tif

GOVERNOR (MODEL RLD-M)

The RLD-J type governor can be used with the MI, MITICS injection pumps, and was designed to have better control and endurance than the previous RLD type governor.

Although the basic construction is identical to that of the RLD type governor, the RLD-M type is larger to match the applicable pumps' larger size.

FEATURES

1. **Variable speed control governor with**

   decreased lever reaction force

   As with the previous RLD type governor, RLD-M governor control is accomplished using the speed control lever to change the fulcrum of the internal link mechanism.

   Consequently, as the reaction force of the governor spring does not act directly on the speed control lever, only a very small lever reaction force is exerted on the accelerator pedal.

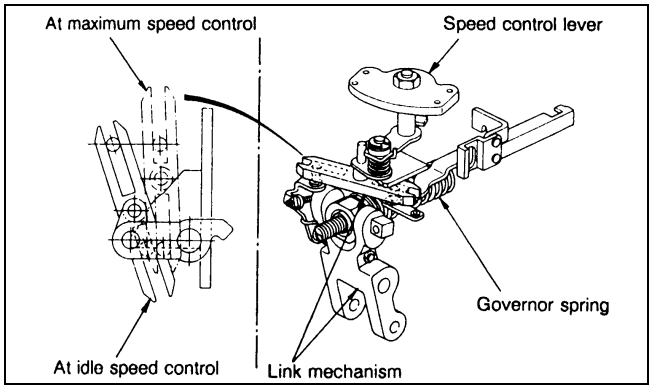

6E-38-1.tif

2. **Set torque characteristics through internal torque cam**

   At full load, the tip of the sensor lever traces the face of the torque cam to determine the full load rack position and control the full load injection quantity.

   Consequently, the torque characteristics demanded by the engine can be freely set by changing the shape of the torque cam face.

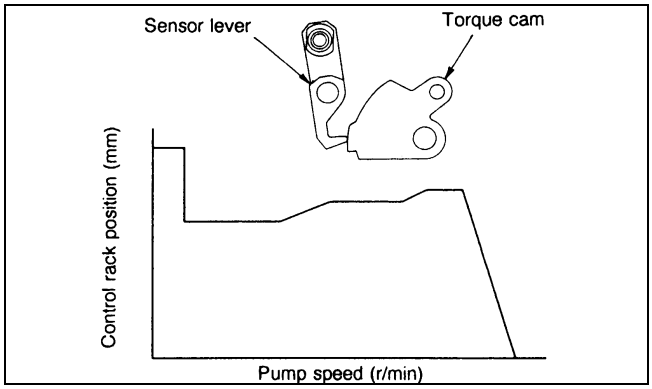

6E-38-1.tif

3. **Improved control through internal guide plate**

   When the speed control lever is operated, the 2nd supporting lever's pin moves along the guide plate. The floating lever connected to the pin thus moves to change the ball joint fulcrum positions.

   In the intermediate to high speed ranges, the guide plate causes the floating lever to move to increase the lever ratio continuously from 1.1 (idling) - 6 (full speed). This increase in the lever ratio in the intermediate to high speed range improves speed droop.

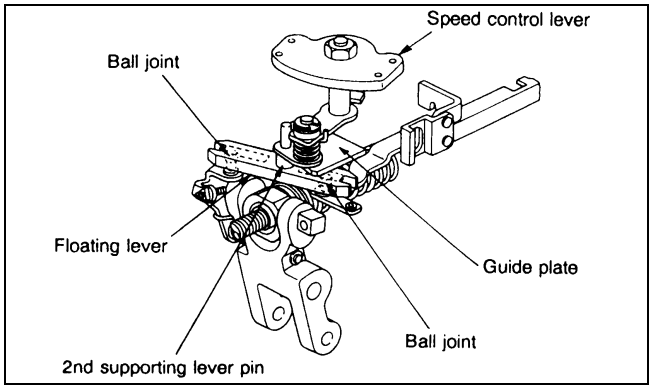

6E-38-1.tif

4. **Timing Advance Control**

   Timing advance control is measuring the ECT to calculate drive current of the solenoid switch for the injection timing advance.

   The injection timing is controlled by according to the ECT when engine is started.

5. **Solenoid Switch**

   The solenoid switch is installed on the top of the injection pump to push the advance lever in the injection pump when 12 or 24 volts is supplied.

   In this condition the injection timing is an additional.

   10 degree (BTDC) from noamal injection timing.

   If there is some trouble for electricity current, it will set the DTC-P23 or P24.

   Refer to the DTC chart.

   If remove the solenoid switch, it can not be reinstalled because it is necesserry to readjust advance value on the injection pump tester.

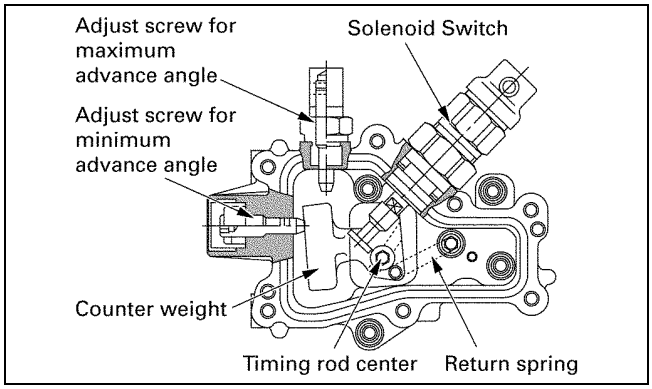

040LY00001

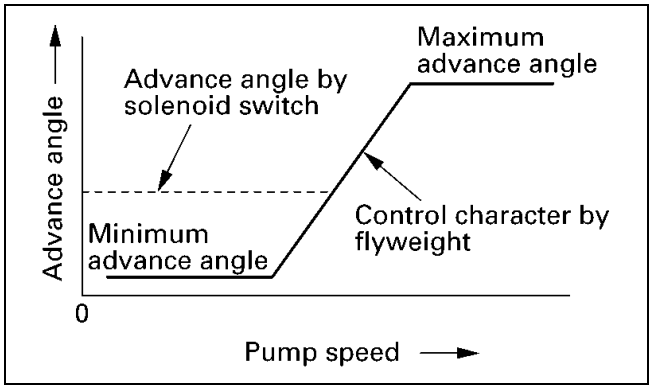

040LY00002

EGR (Exhaust Gas Recirculation) SYSTEM

EGR Purpose

The exhaust gas recirculation (EGR) system is use to reduce emission levels of the oxdes of nitrogen (NOx). The NOx emission levels are caused by a high combustion temperrature. The EGR system lowers the NOx emission levels by decreasing the combustion temperature.

EGR control

The main element of the system is the EGR valve.

The EGR valve feeds small amounts of the exhaust gas back into the intake manifold.

The EGR valve is controlled by the ECM and the ECM uses information from the following sensors to control the EGR valve.

- Engine coolant temperature (ETC) sensor.
- Engine speed sensor.
- Rack sensor
- Exhaust brake switch condition.
- Atmospheric pressure sensor.

EGR valve Operation and Results of Incorrect Operation

The EGR valve is designed to accurately supply EGR to the engine independent of he intake manifold.

The EGR valve controls EGR flow from the exhaust manifold to the intake manifold through the VSV (Vacuum Switching Valve) with a ECM controlled EVRV (Electrical Variable Regulating Valve).

The ECM monitors related sensor or switch condition, if EVRV solenioid has incorrect operation, DTC P31 or P32 will be set.

If DTCs P13, P14, P21, P22,P35, P36, P45 or P61 are set, refer to the DTC charts.

Rack Sensor

The rack sensor is engaged with tip of injection pump rack.

The rack sensor signal will send during vehicle operating to the ECM, the ECM calculate together with other sensor's signal, the ECM output activation signal for EVRV.

Atmospheric Pressure Sensor

The atmospheric pressure censor is built-in the ECM.

The EVRV activity will be stopped, when the atmospheric pressure will comes below the setting pressure.

Exhaust Brake Switch

The exhaust brake switch is equipped on the steering column.

The exhaust brake switch is controlled by vehicle operator, when during the vehicle operating the vehicle operator will demand to apply the exhaust brake for assist the main brake system.

EGR quick cut control

During the VSV action, when the EVRV drive current will comes over the setting valve (the drive current will decide relation of the engine load and speed) immediate stop the VSV.

Result of this action will reduce the PM (Particulate Mater).

EVRV control

The EGR is controlled under normal temperture with separate stage by the ECT of engine condition.

ECM refer to EGR action map to demand the EVRV drive current, also ECM controls agree EVRV drive current and EVRV actual drive current each other .

Otherwise the ECM transitional stage controls for current of EVRV when EGR is controlled moving OFF area to ON area on the EGR action map.

Also stop the EVRV drive for stop the EGR system under following conditions.

When under low temperature of the ECT.

When acting the QWS system.

When acting the exhaust brake

When the atomspheric pressure comes under setting the pressure valve.

VSS (Variable Swirl System)

The Variable Swirl System (VSS) is designed to adjust the intensity of swirl by allowing or not allowing air to flow through a sub-port (or bypass) the runs in parallel with the intake port for each cylinder. The swirl intensifies when there is no air flow through the sub-port, and vice versa.

The air flow is controlled by the on-off valve at the inlet to the sub-port and the valve in turn is turned on and off by computer signals which are dependent on engine speed, load and coolant temperature. Basically, the air is cut off at low speeds to maintain high swirl and is allowed to flow at high speeds to maintain low swirl.

VARIABLE SWIRL SYSTEM (Equipped with EGR and VSS)

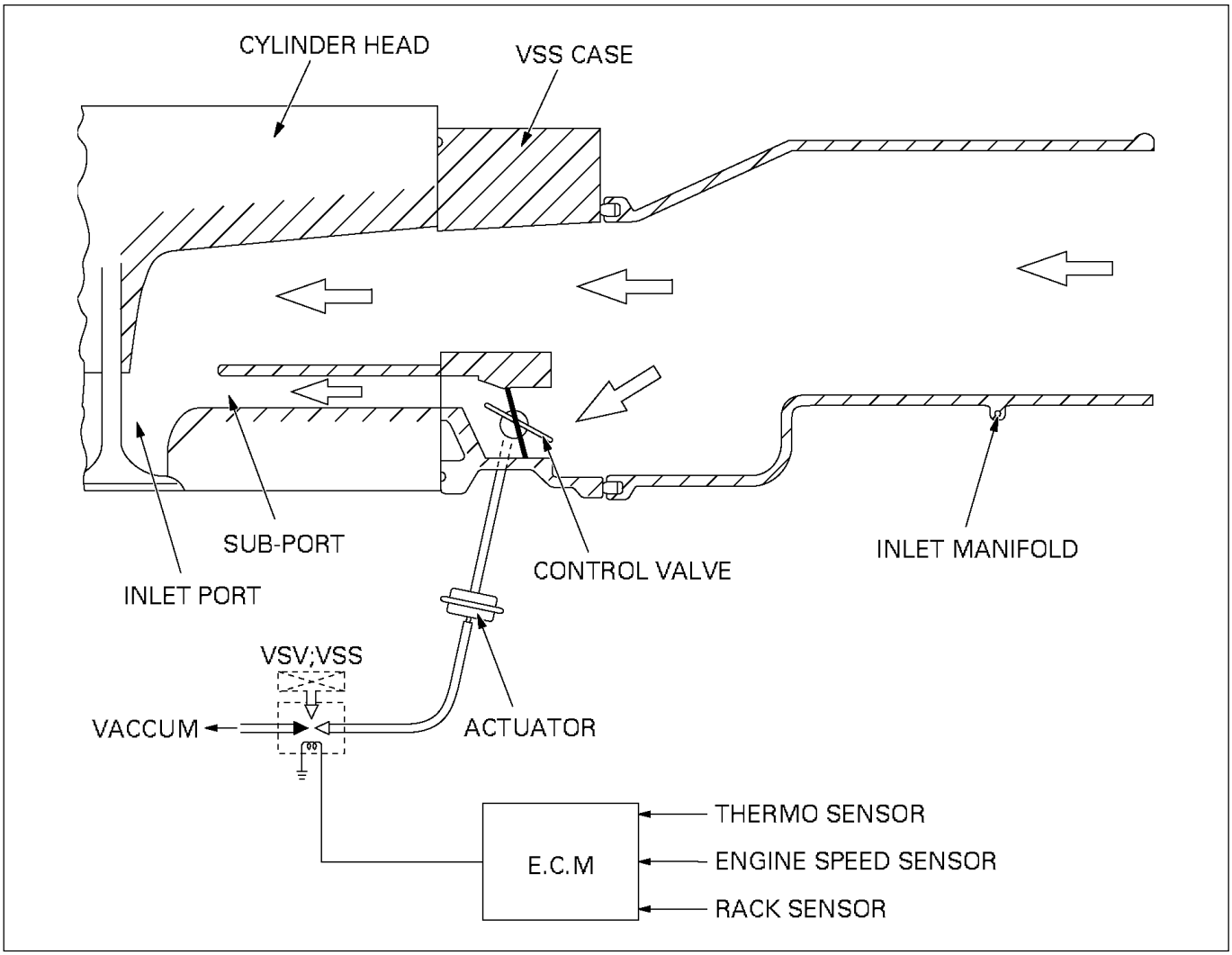

028LW001.tif

ENGINE CONTROL MODULE (ECM) SYSTEM WIRING DIAGRAM (Until Model Year 1998)

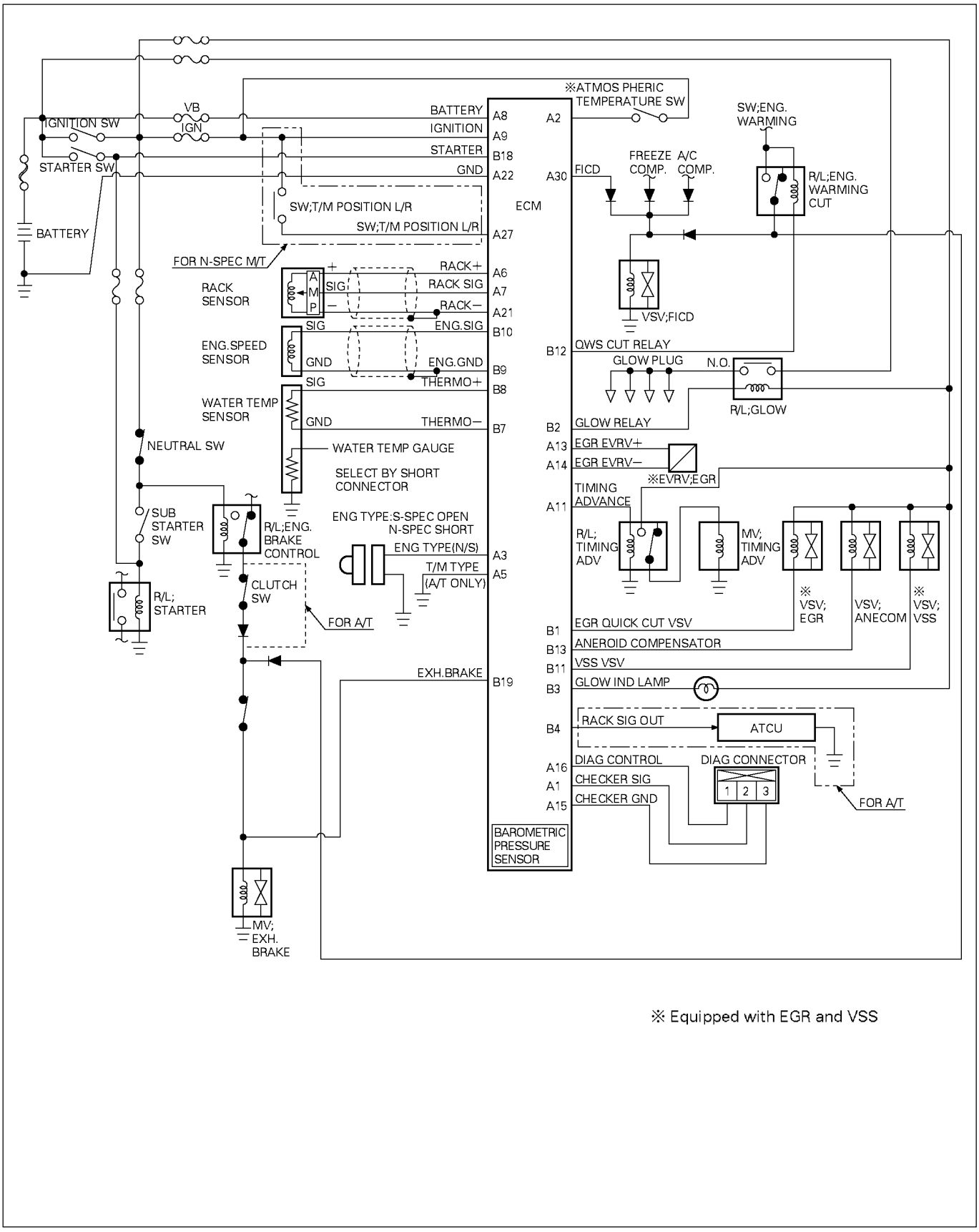

826LW015-1.tif

ENGINE CONTROL MODULE (ECM) SYSTEM WIRING DIAGRAM (From Model Year 1999)

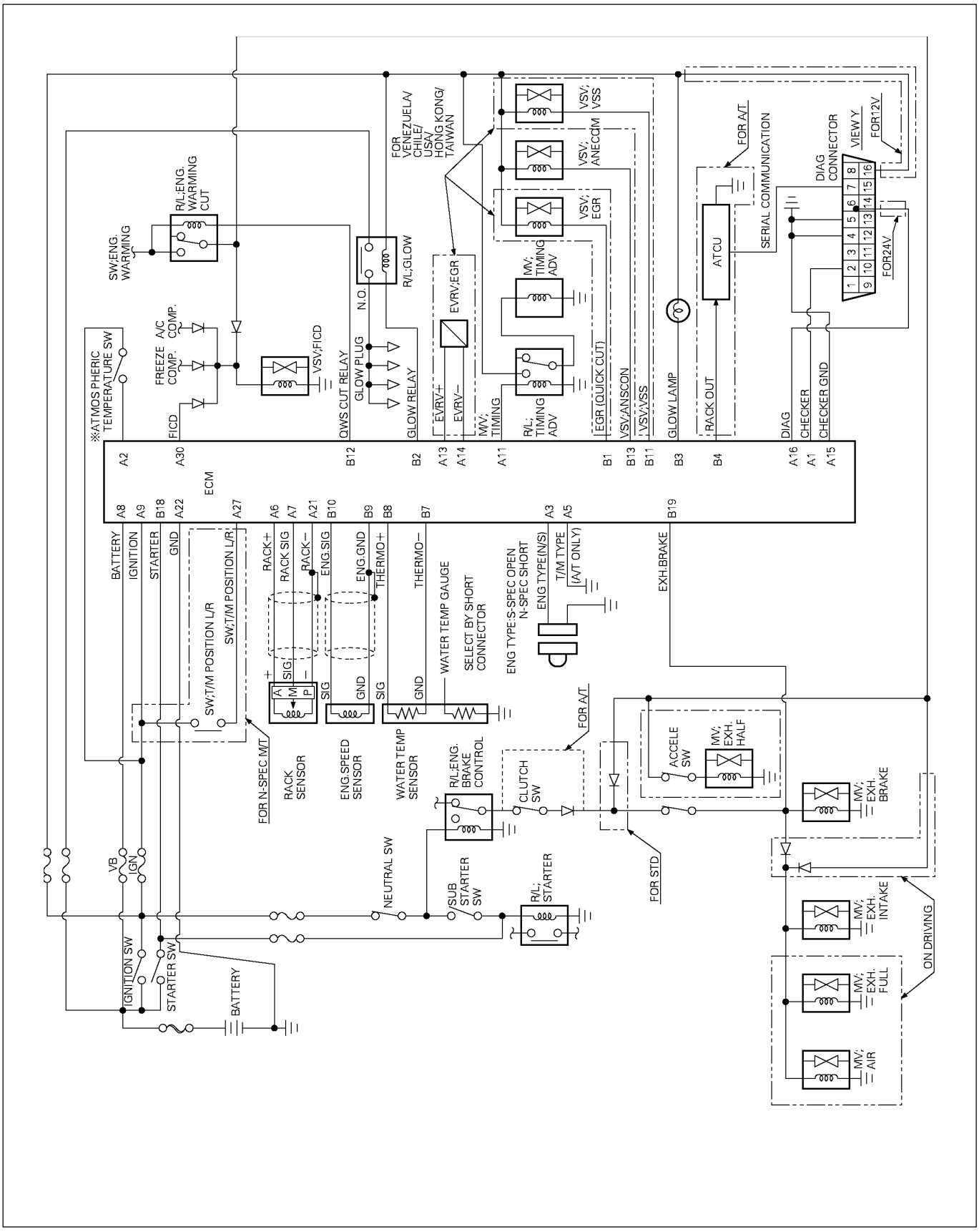

826LX008.tif

AUXILIARY ENGINE CONTROL SYSTEM
(Equipped with Exhaust Gas Recirculation and Variable Swirl System)

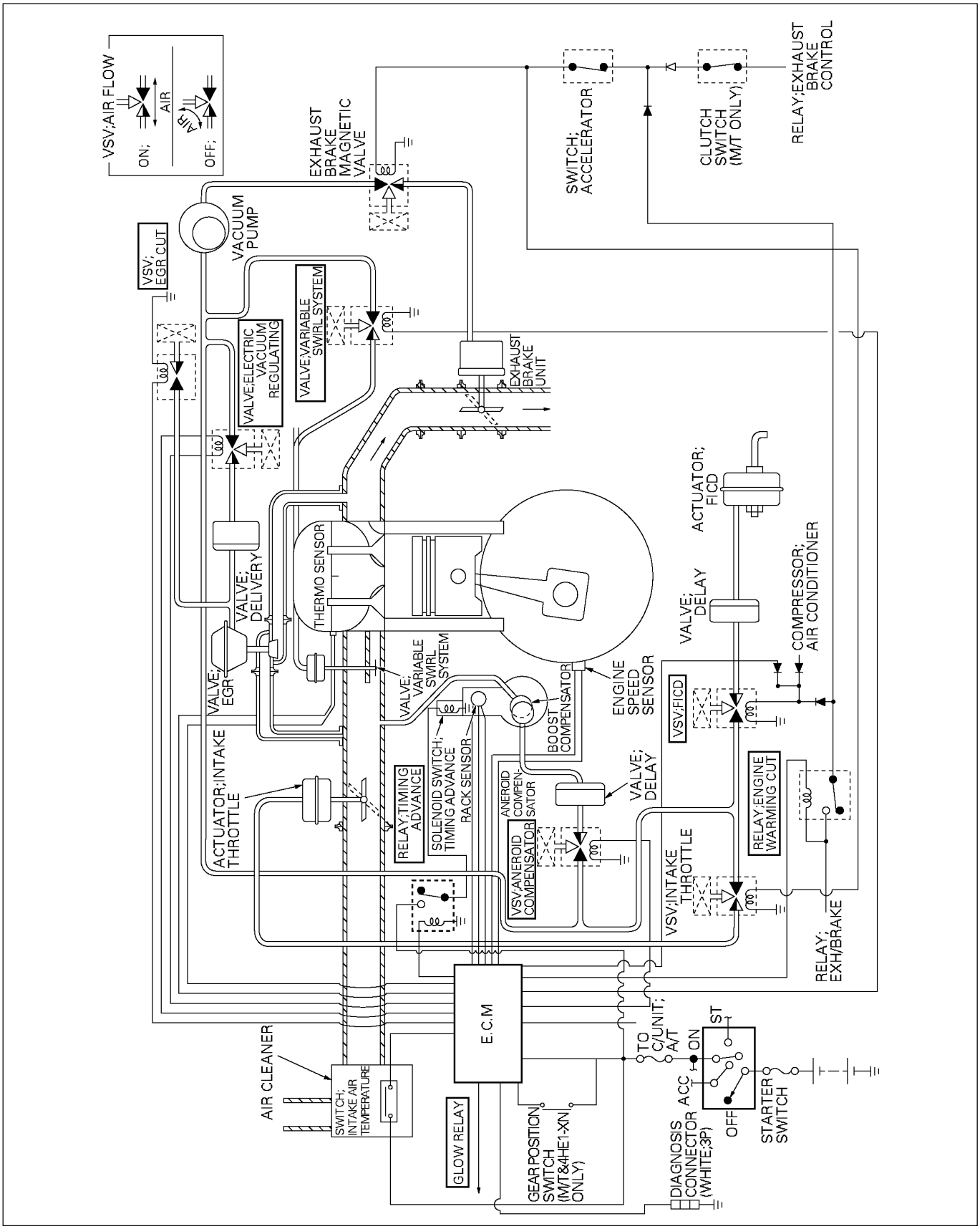

056LW011.tif

AUXILIARY ENGINE CONTROL SYSTEM
(Equipped without Exhaust Gas Recirculation and Variable Swirl System)

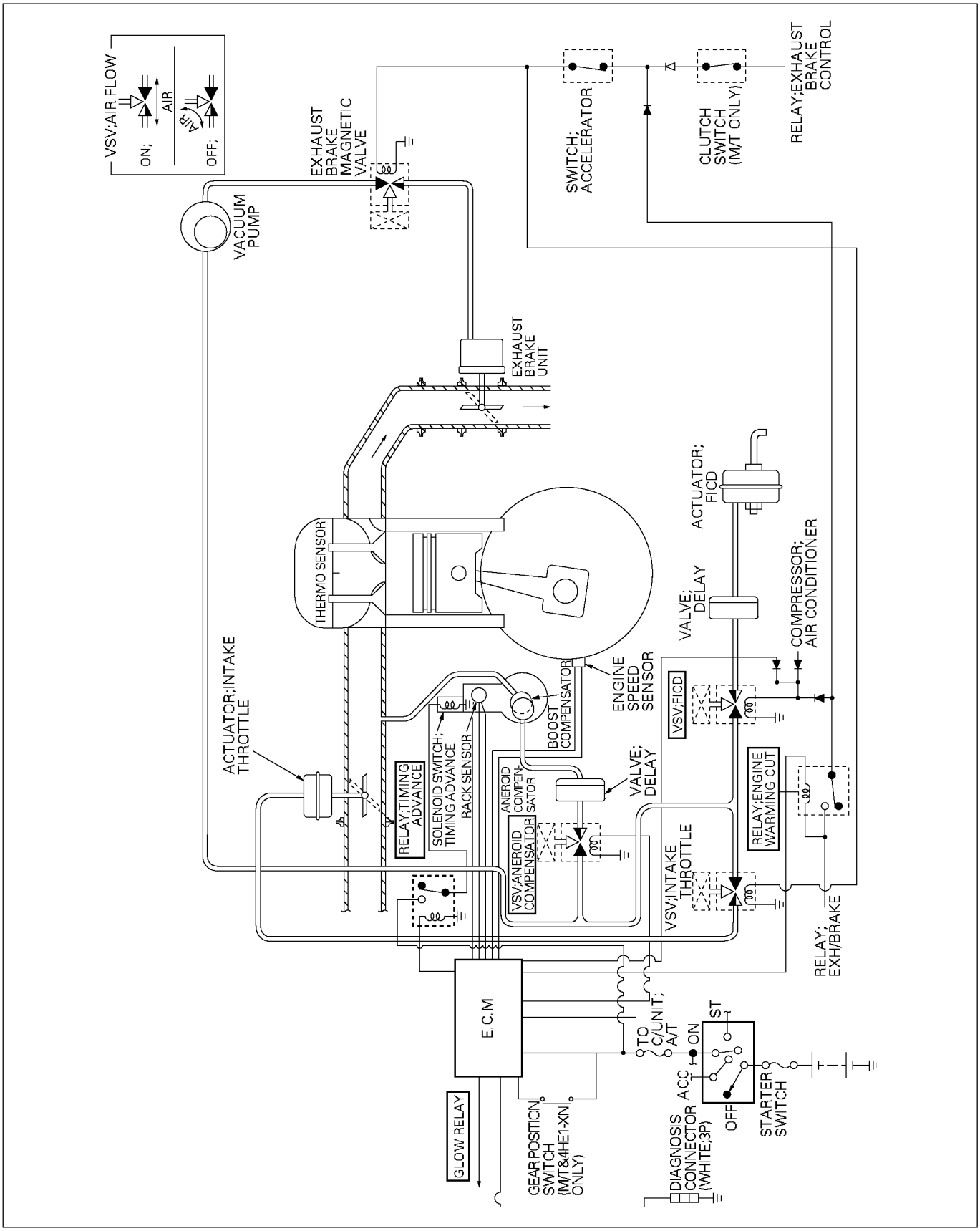

056LW034.tif

VACUUM SWITCHING VALVE (VSV) CIRCUIT
(Equipped with Exhaust Gas Recirculation and Variable Swirl System)

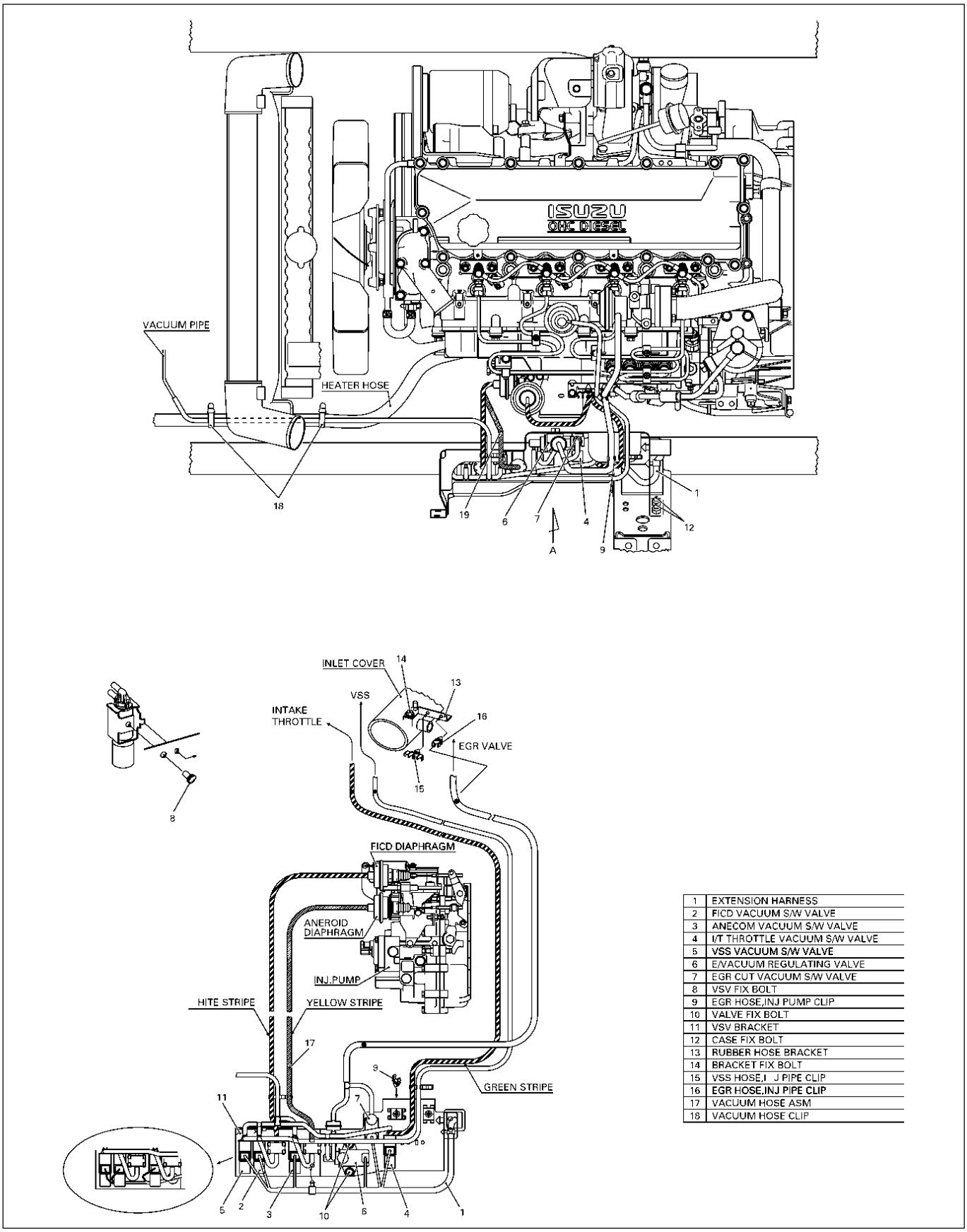

1	EXTENSION HARNESS
2	FICD VACUUM S/W VALVE
3	ANECOM VACUUM S/W VALVE
4	I/T THROTTLE VACUUM S/W VALVE
5	VSS VACUUM S/W VALVE
6	E/VACUUM REGULATING VALVE
7	EGR CUT VACUUM S/W VALVE
8	VSV FIX BOLT
9	EGR HOSE,INJ PUMP CLIP
10	VALVE FIX BOLT
11	VSV BRACKET
12	CASE FIX BOLT
13	RUBBER HOSE BRACKET
14	BRACKET FIX BOLT
15	VSS HOSE,I J PIPE CLIP
16	EGR HOSE,INJ PIPE CLIP
17	VACUUM HOSE ASM
18	VACUUM HOSE CLIP

028LW002.tif

VACUUM SWITCHING VALVE (VSV) CIRCUIT
(Equipped without Exhaust Gas Recirculation and Variable Swirl System)

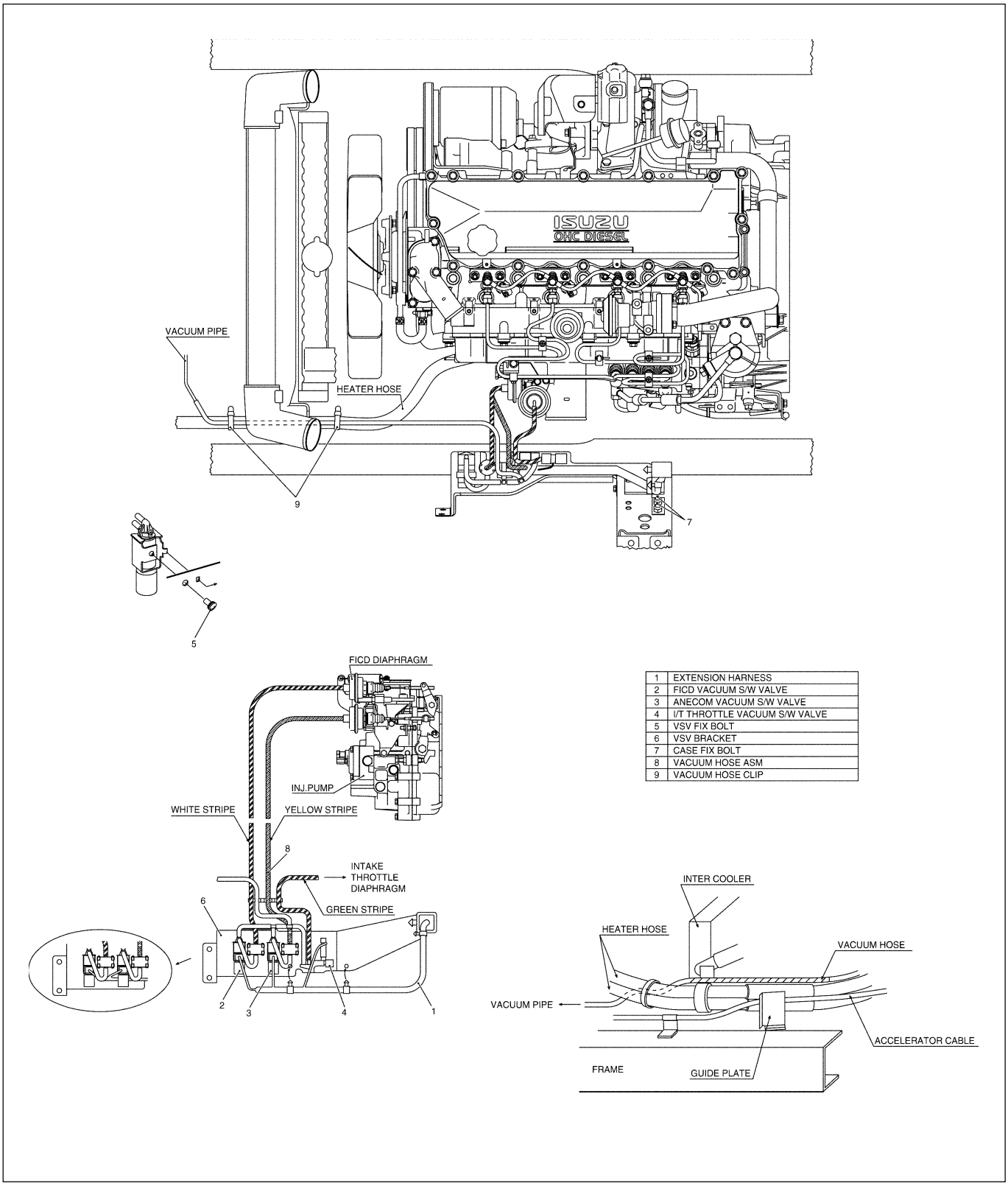

1	EXTENSION HARNESS
2	FICD VACUUM S/W VALVE
3	ANECOM VACUUM S/W VALVE
4	I/T THROTTLE VACUUM S/W VALVE
5	VSV FIX BOLT
6	VSV BRACKET
7	CASE FIX BOLT
8	VACUUM HOSE ASM
9	VACUUM HOSE CLIP

028LW003.tif

EXHAUST BRAKE AND ENGINE WARM-UP CONTROL

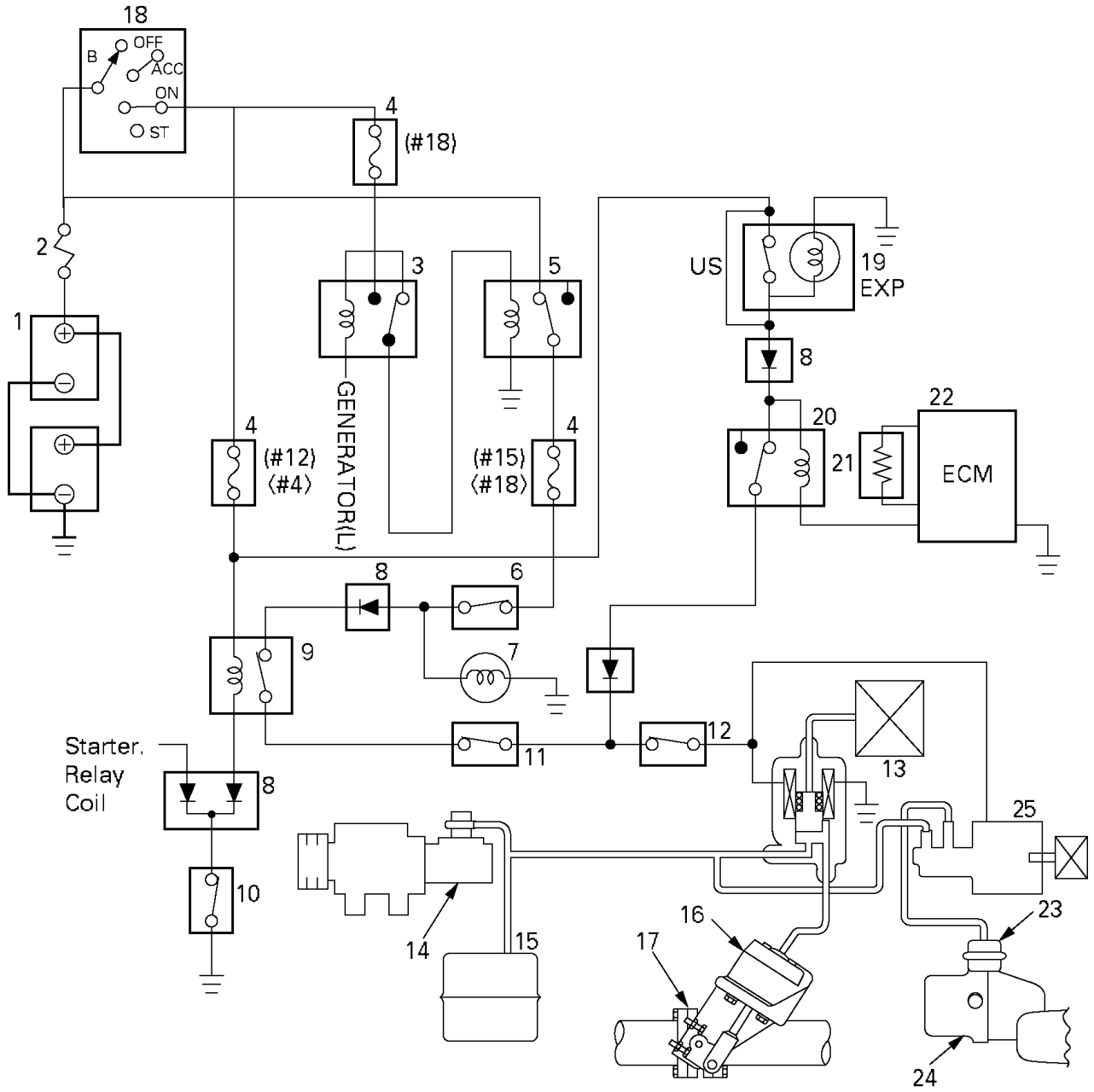

1. Batteries
2. Fusible Link Wire
3. Charge Relay
4. Fuse
5. Exhaust Brake Relay
6. Exhaust Brake Switch
7. Indicator Light
8. Diode
9. Exhaust Brake Control Relay
10. Neutral Switch (M/T)
    Inhibitor Switch (A/T)
11. Clutch Switch (M/T only)
12. Accelerator Switch
13. Magnetic Valve: Exhaust Brake
14. Vacuum Pump
15. Vacuum Tank
16. Vacuum Chamber: Exhaust Brake
17. Exhaust Brake Valve
18. Key Switch
19. Engine Warming-up Switch
20. Engine Warming Cut Relay
21. Engine Coolant Temperature Sensor
22. ECM
23. Vacuum Chamber: Intake Throttle
24. Intake throttle
25. Magnetic Valve Intake Throttle

A/T: Automatic Transmission
M/T: Manual Transmission

052LW001.tif

DTC-P13 ENGINE COOLANT TEMPERATUR (ECT) SENSOR CIRCUIT HIGH VOLTAGE

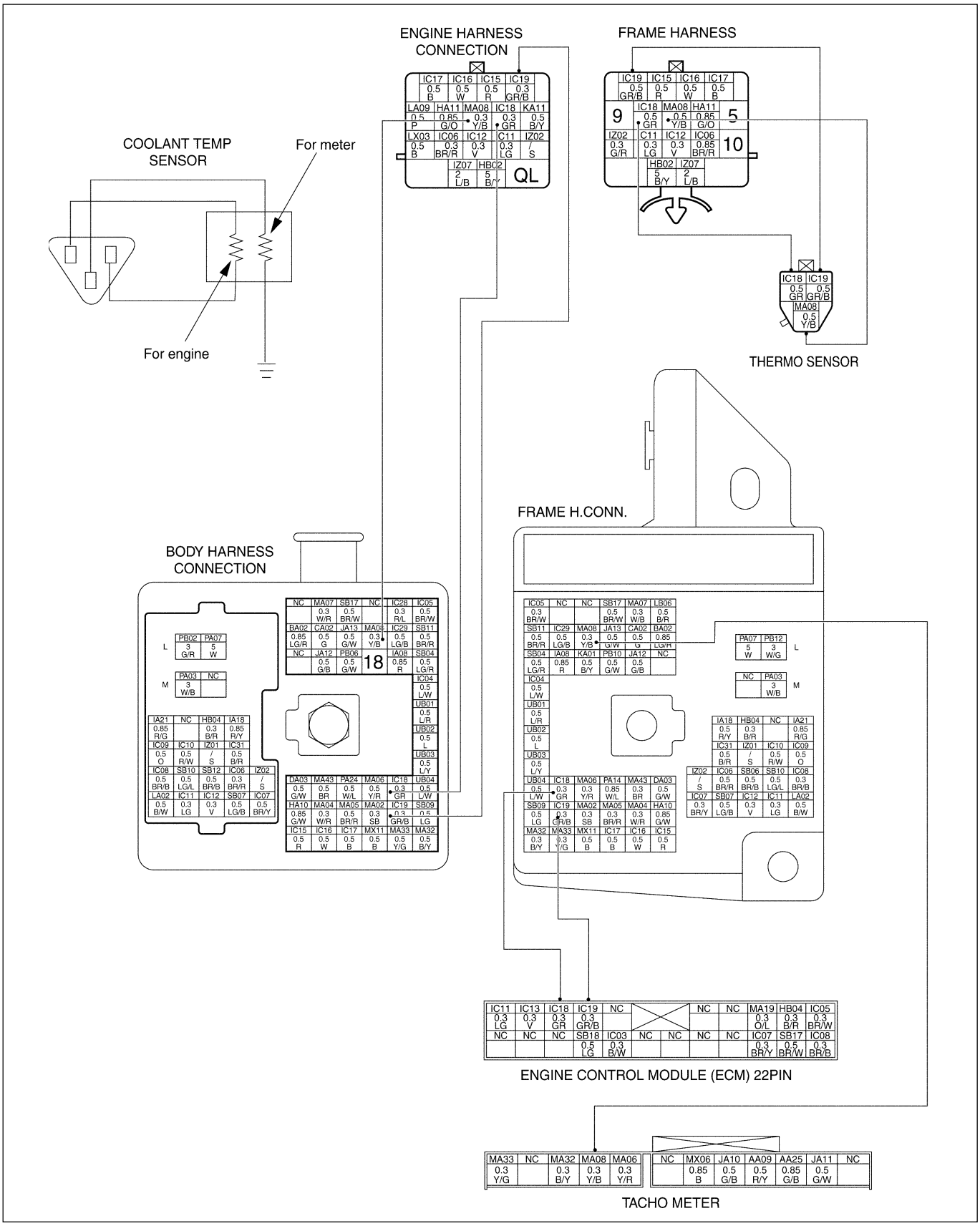

06 5LW038.tif

Appearance of water temperature sensor and connector pin assignment.

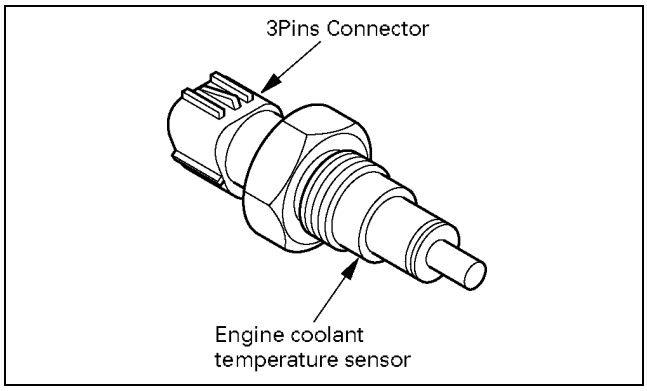

Figure. Temperature sensor 056LW017.tif

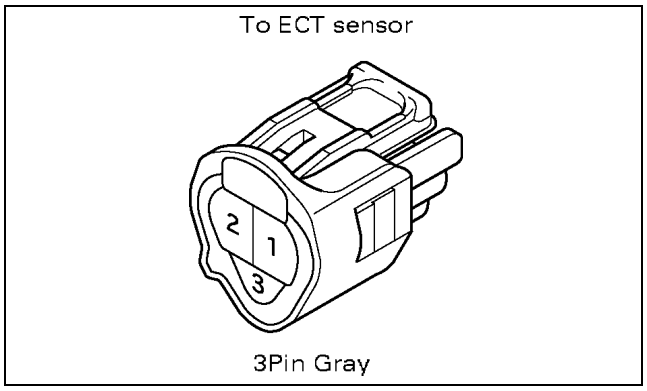

Figure. Connector pin assignment 056LW012.tif

Connector No	Signal
1	Thermistor for engine
2	Thermistor for engine
3	Thermistor for meter

Measure resistance at Engine Coolant Temperature (ECT) sensor

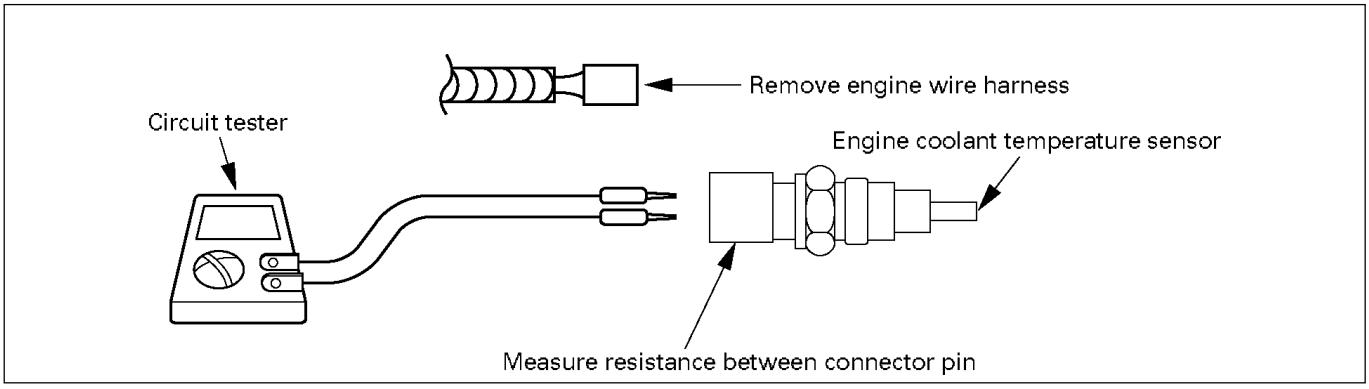

056LW023.tif

CAUTION:

When measuring resistance with a circuit tester, be careful not to damage or deform the terminals.

Resistance value

Inspection Point		Resistance Value	Temperature on sensor	Reference
Connector	Pin No.			
3 pin Black	1 ←→ 3	∞	-	Thermistor for ENGINE ←→ Thermistor for meter
	1 ←→ 2	2.5 (kΩ)	20 (°C)	Thermistor for ENGINE
		247 (Ω)	90 (°C)	
	1 ←→ Body	∞	-	Thermistor for ENGINE ←→ Body
	2 ←→ 3	∞	-	Thermistor for ENGINE ←→ Thermistor for meter
	3 ←→ Body	146.6 (Ω)	60 (°C)	Thermistor for meter ENGINE
	2 ←→ Body	∞	-	Thermistor for ECM ←→ Body

Note: Resistance value is difference according to the temperature of temperature sensor.

Step	Action	Value (s)	Yes	No
1	Was the “on-board diagnostic (OBD) system check” performed?	-	Go to Step 2	Go to self diag system check
2	1. Ignition “OFF” 2. Disconnect ECT sensor electrical connector. 3. Jumper the ECT sensor signal circuit and the ECT sensor ground circuit together at the ECT sensor harness connector. 4. Observe the “Engine cool temp” display on the scan tool. Is the “Engine cool temp” at the specified value?	248°F (120°C)	Go to Step 4	Go to Step 3
3	1. Ignition “OFF” 2. Jumper the ECT signal circuit at the ECT sensor harness connector to chassis ground. 3. Observe the “Engine cool temp” display on the scan tool. Is the “Engine cool temp” at the specified value?	248°F (120°C)	Go to Step 5	Go to Step 6
4	Check for poor connection at the ECT sensor and replace terminals if necessary. Did any terminals require replacement?	-	Go to Step 8	Go to Step 10
5	1. Ignition “OFF”. 2. Disconnect the ECM, and check the ECT sensor ground circuit for an open. 3. If the ECT sensor ground circuit is open, repair it as necessary. Was the ECT sensor ground circuit open?	-	Go to Step 7	Go to Step 10
6	1. Ignition “OFF”. 2. Disconnect the ECM, and check the ECT sensor signal circuit for an open. 3. If the ECT signal circuit is open, repair it as necessary. Was the ECT sensor signal circuit open?	-	Go to Step 7	Go to Step 10
7	Check for poor sensor ground or ECT sensor signal circuit terminal connection at the ECU and replace terminal(s) if necessary. Did any of the terminals need to be replaced?	-	Go to Step 9	Go to Step 10
8	1. Ignition “OFF” 2. Replace the ECT Sensor. Is the action complete?	-	Go to Step 10	-
9	1. Replace the ECM. Is the action complete?	-	Go to Step 10	-
10	1. Reconnect all the connectors removed. 2. Ignition “ON”, Engine “OFF” Is DTC 13 all right under Scan Tool Check?	-	Go to Step 11	Go to Step 2
11	Is any current trouble other than DTC 13 displayed by scan tool?	-	Go to trouble code section	Trouble code clear

DTC-P14 ENGINE COOLANT TEMPERATURE (ECT) SENSOR CIRCUIT LOW VOLTAGE

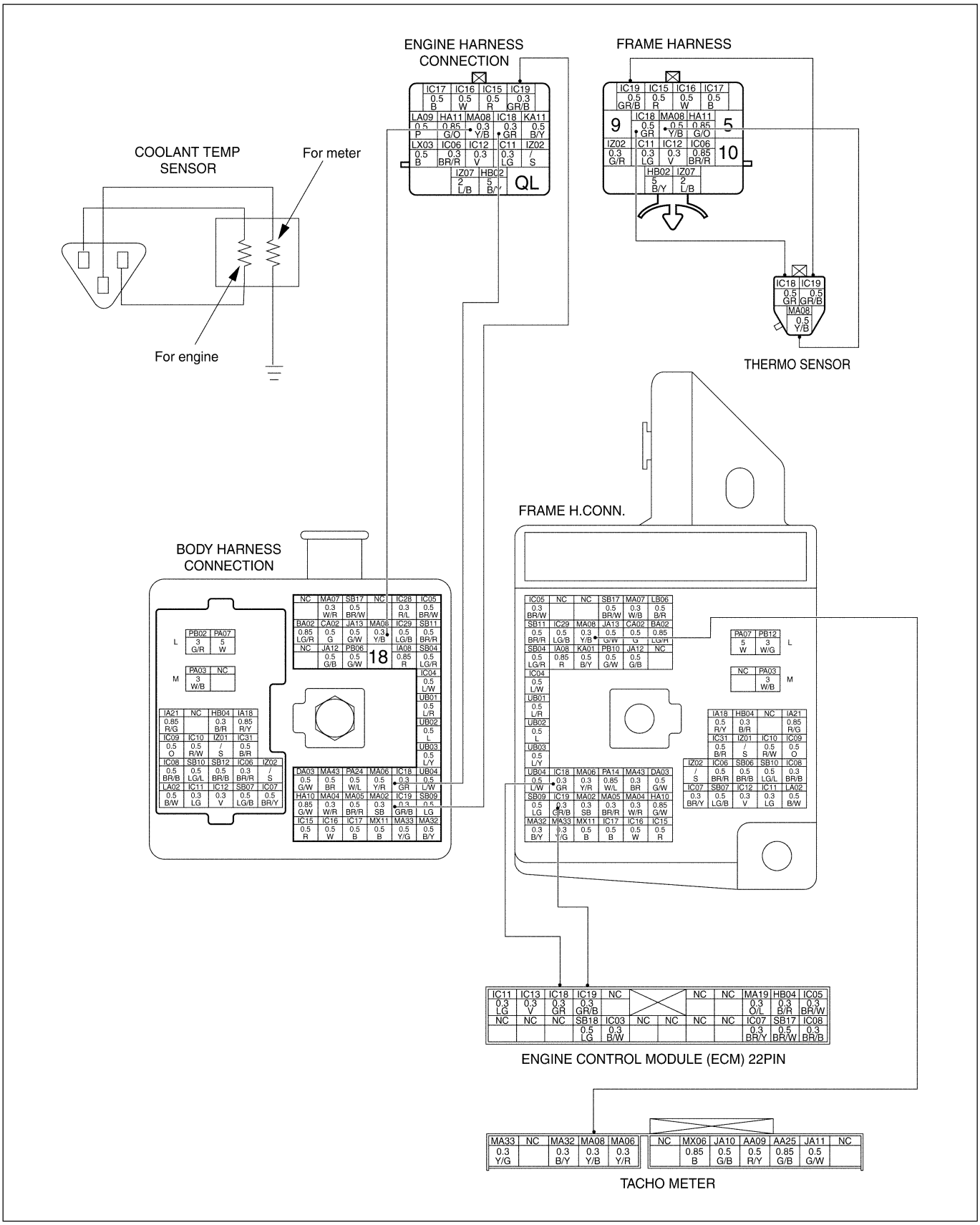

065LW038.tif

Appearance of water temperature sensor and connector pin assignment.

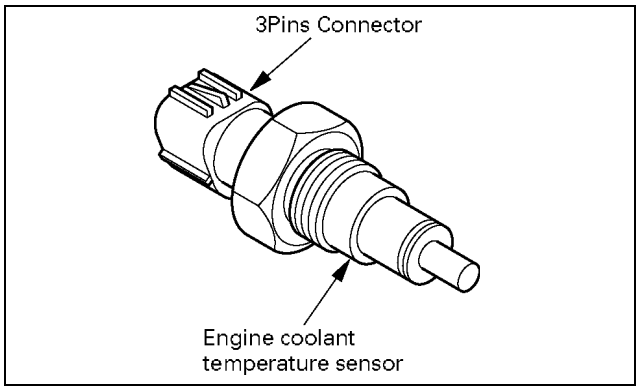

Figure. Temperature sensor 056LW017.tif

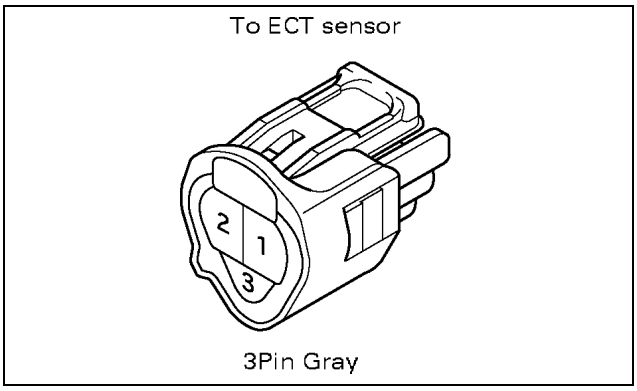

Figure. Connector pin assignment 056LW012.tif

Connector No	Signal
1	Thermistor for engine
2	Thermistor for engine
3	Thermistor for meter

Measure resistance at Engine Coolant Temperature (ECT) sensor

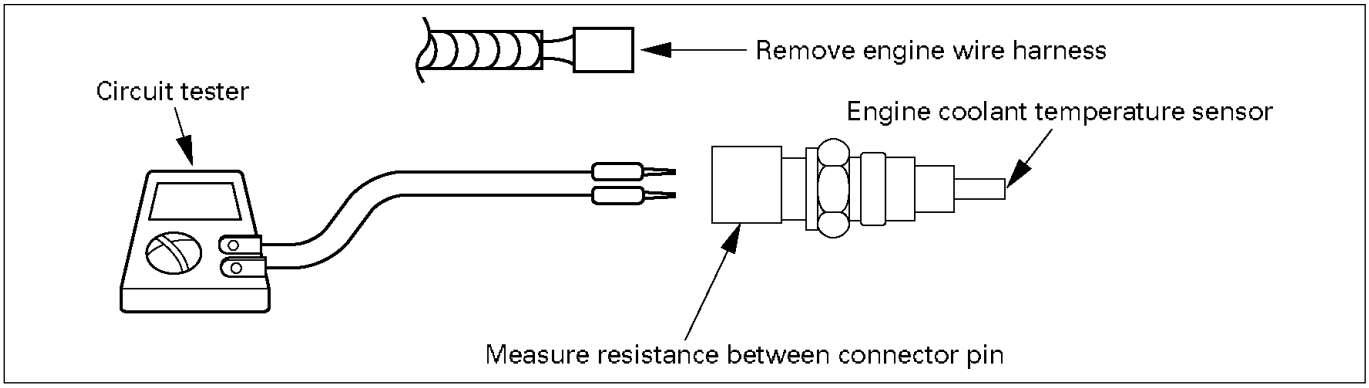

056LW023.tif

CAUTION:

When measuring resistance with a circuit tester, be careful not to damage or deform the terminals.

Resistance value

Inspection Point		Resistance Value	Temperature on sensor	Reference
Connector	Pin No.			
3 pin Black	1 ←→ 3	∞	-	Thermistor for ENGINE ←→ Thermistor for meter
	1 ←→ 2	2.5 (kΩ)	20 (°C)	Thermistor for ENGINE
		247 (Ω)	90 (°C)	
	2 ←→ Body	∞	-	Thermistor for ENGINE ←→ Body
	2 ←→ 3	∞	-	Thermistor for ENGINE ←→ Thermistor for meter
	3 ←→ Body	146.6 (Ω)	60 (°C)	Thermistor for meter ENGINE
	2 ←→ Body	∞	-	Thermistor for ECM ←→ Body

Note: Resistance value is difference according to the temperature of temperature sensor.

Step	Action	Value (s)	Yes	No
1	Was the “on-board diagnostic (OBD) system check” performed?	-	Go to Step 2	Go to self diag system check
2	1. Ignition “OFF” 2. Disconnect the ECT sensor. 3. Ignition “ON”, Engine “OFF” 4. See scan Tool Display and Ignore trouble code 13. 5. Does code 14 still remain faulty?	-	Go to Step 3	Go to Step 6
3	1. Ignition “OFF” 2. Check Connector ECT Sensor Harness for interterminal short. 3. Repair if necessary. Was ECT Sensor connector shorted?	-	Go to Step 4	Go to Step 8
4	1. Ignition “OFF” 2. Check the ECM connector terminal short? 3. Repair if necessary. Was ECM terminal shorted?	-	Go to Step 5	Go to Step 8
5	1. Disconnect the ECM. 2. Check if ECT sensor signal circuit for a short to ground or a short to ground circuit. 3. Repair if necessary. Is ECT sensor signal circuit shorted to ground.	-	Go to Step 7	Go to Step 8
6	1. Ignition “OFF” 2. Replace the ECT Sensor. Is the action complete?	-	Go to Step 8	-
7	1. Replace the ECM. Is the action complete?	-	Go to Step 8	-
8	1. Reconnect all the connectors removed. 2. Ignition “ON”, Engine “OFF” Is DTC 14 all right under Scan Tool Check?	-	Go to Step 9	Go to Step 2
9	Is any current trouble other than DTC 14 displayed by scan tool?	-	Go to trouble code section	Trouble code clear

DTC-P21 RACK SENSOR CIRCUIT LOW VOLTAGE

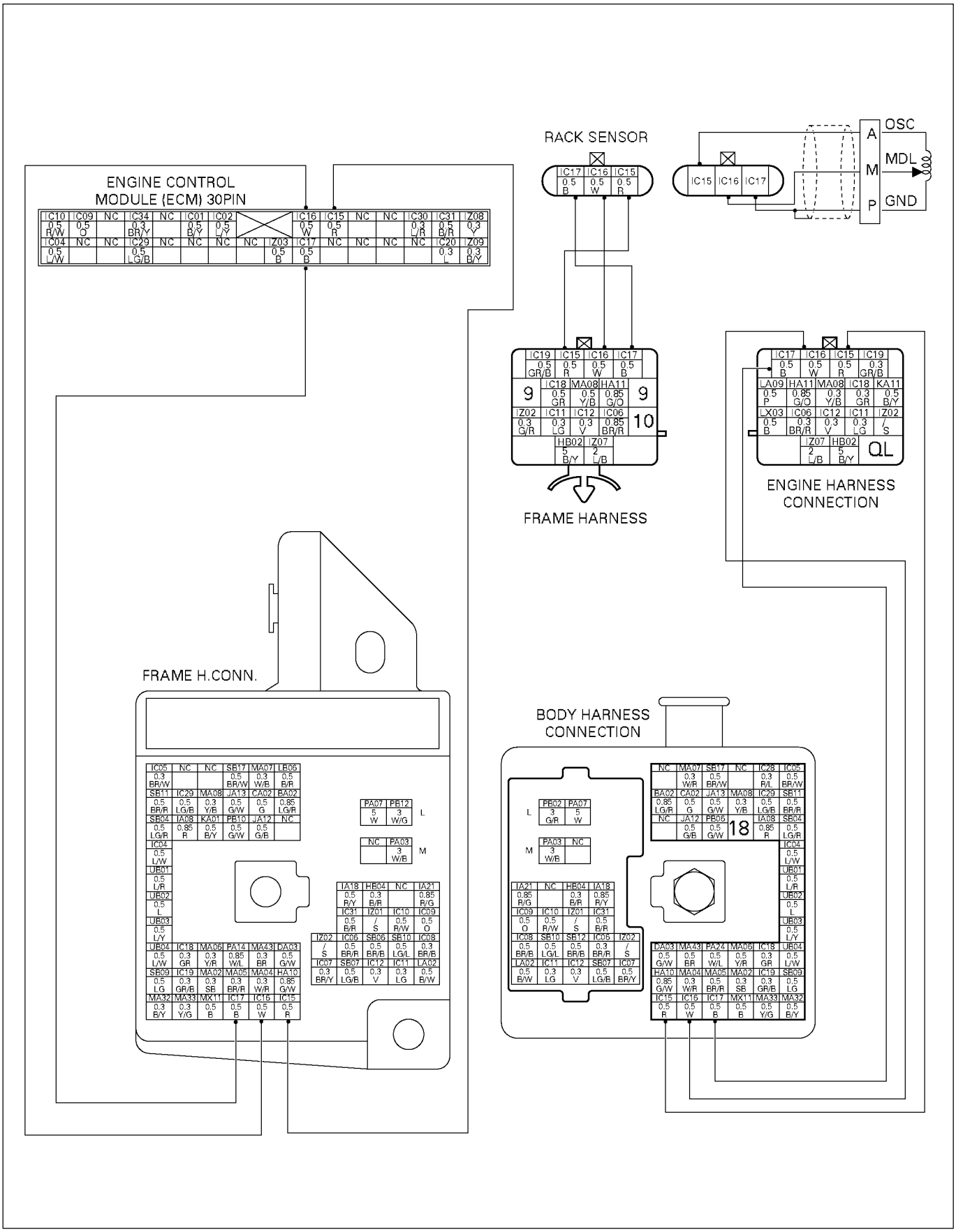

065LW037.tif

Location of Rack sensor connector

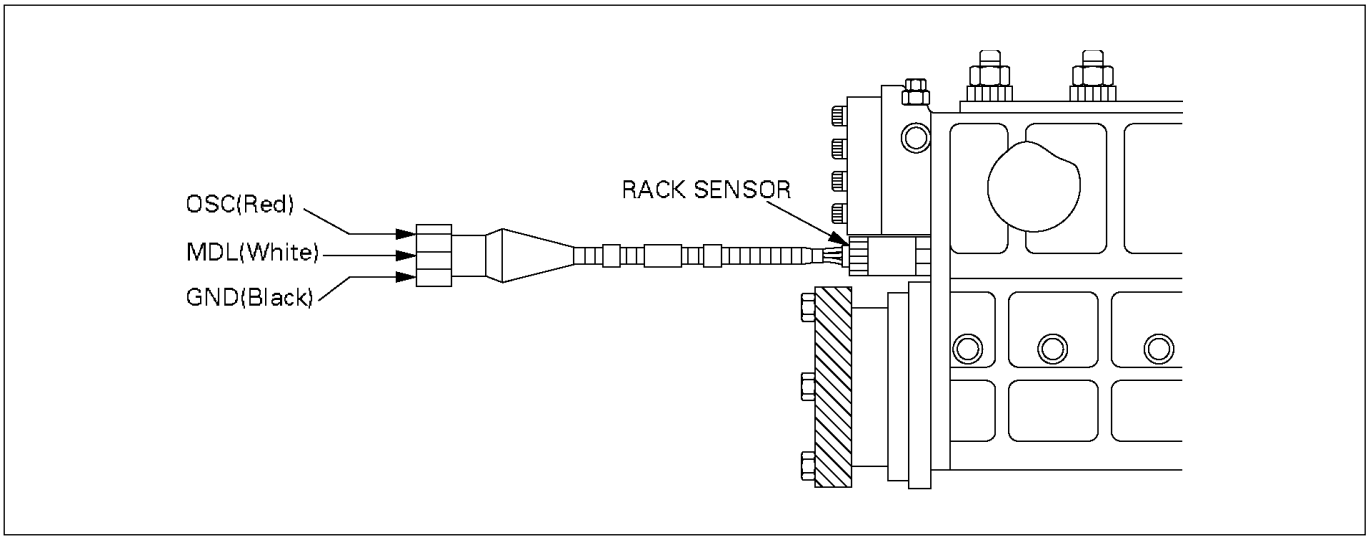

040LW032.tif

Connector name of Rack sensor

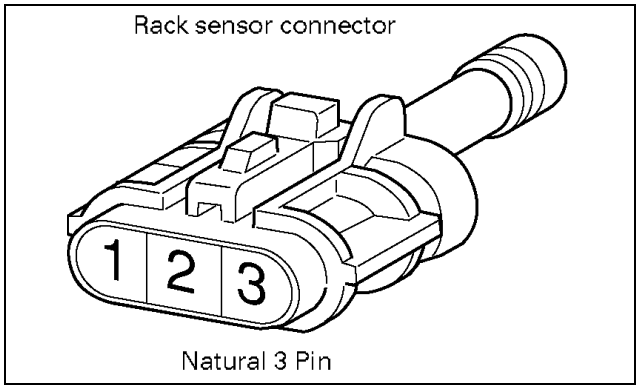

065LW001.tif

NOTE: Mark "___" on connector which is plugged, therefore, should be confirmed to be played.

Relation between connector number and signal name

Connector No.	Signal name	Wire color
1	Rack sensor (OSC)	R
2	Rack sensor (MDL)	W
3	Rack sensor (GND)	B

Step	Action	Value (s)	Yes	No
1	Was the “on-board diagnostic (OBD) system check” performed?	-	Go to Step 2	Go to self diag system check
2	1. Check harness side power source circuit and signal circuit for GND short. 2. Repair if necessary. 3. Has DTC21 been corrected?	-	Go to Step 10	Go to Step 3
3	Disconnect Sensor Connector. Jumper RACK+ and RACK sig. Free from trouble now? Ignore code 22.	-	Go to Step 4	Go to Step 6
4	1. Apply 5V to RACK+ TERMINAL. Measure RACK SIG Voltage. Is RACK SIG VOLTAGE as specified?	0.9-2.0V (Idling speed)	Go to Step 7	Go to Step 5
5	1. Check Rack Sensor Harness Signal Circuit and power source for GND short. Check signal circuit for disconnect. 2. Repair if necessary. 3. Free from trouble now?	-	Go to Step 10	Go to Step 7
6	1. Check harness signal circuit and power source circuit for disconnect. 2. Repair if necessary. 3. Free from trouble now?	-	Go to Step 10	Go to Step 8
7	1. Check the iron core of RACK Sensor for damage, seizure, and wear. 2. After check, repair if necessary. Was there any trouble in the iron core (RACK end) inside RACK Sensor?	-	Go to Step 10	Go to Step 9
8	Replaced RACK Sensor?	-	Go to Step 10	-
9	1. Replace the ECM. Is the action complete?	-	Go to Step 10	-
10	1. Reconnect all the connectors removed. 2. Ignition -ON+, Engine “OFF” Is DTC 21 all right under Scan Tool Check?	-	Go to Step 10	Go to Step 2
11	Is any current trouble other than DTC 21 displayed by scan tool?	-	Go to trouble code section	Trouble code clear

DTC-P22 RACK SENSOR CIRCUIT HIGH VOLTAGE

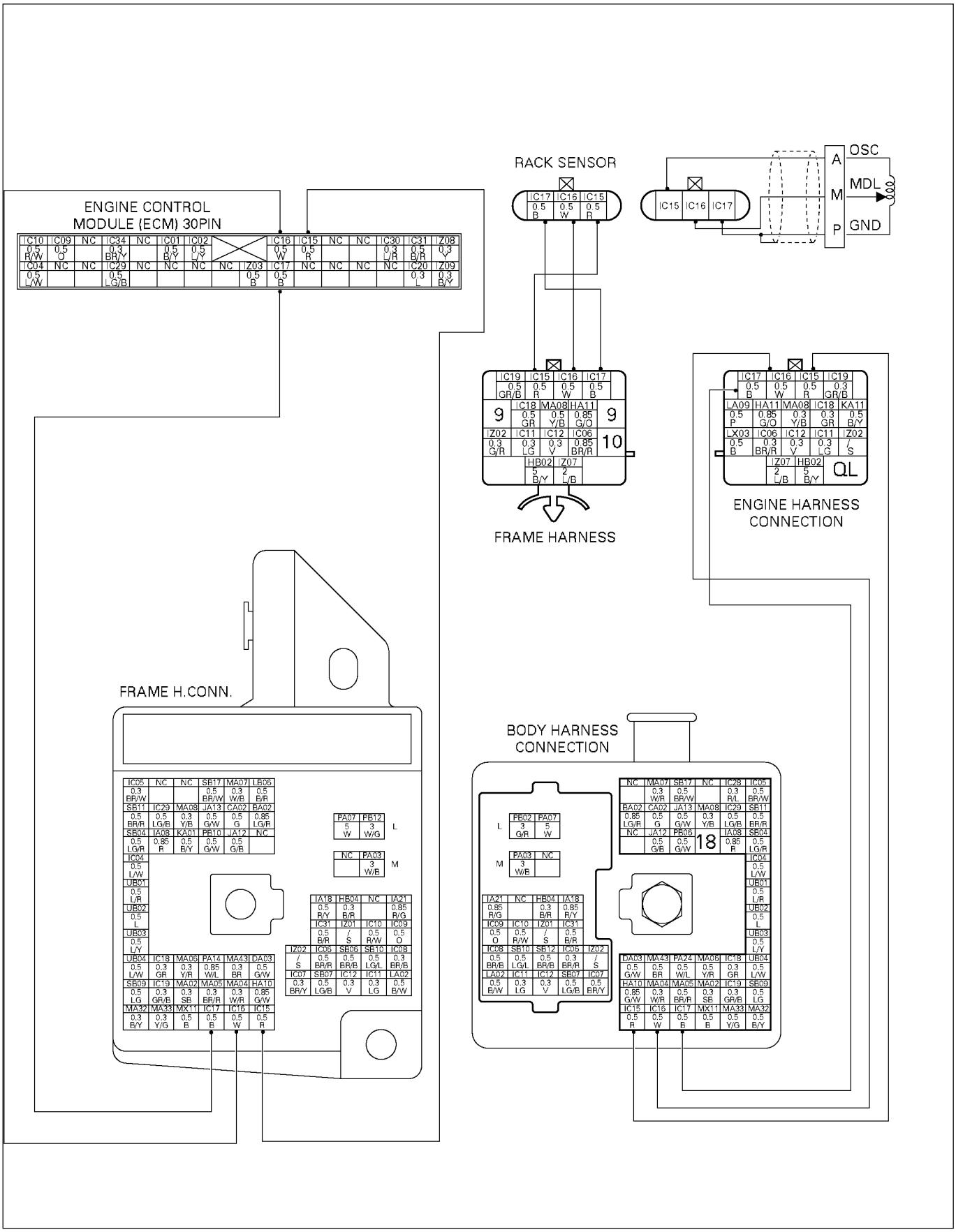

065LW037.tif

Location of Rack sensor connector

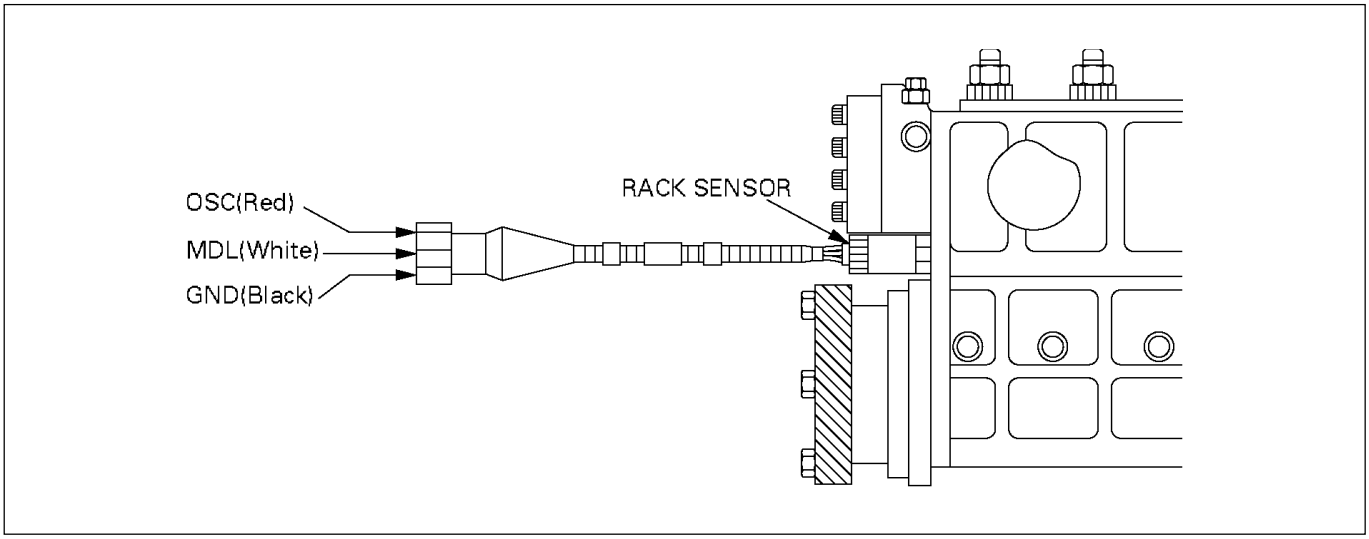

040LW032.tif

Connector name of Rack sensor

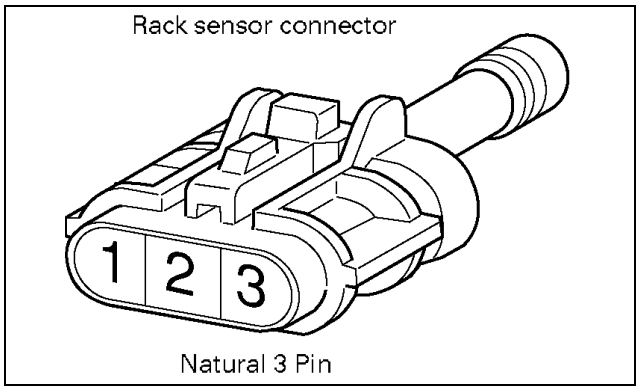

065LW001.tif

NOTE: Mark "___" on connector which is plugged, therefore, should be confirmed to be played.

Relation between connector number and signal name

Connector No.	Signal name	Wire color
1	Rack sensor (OSC)	R
2	Rack sensor (MDL)	W
3	Rack sensor (GND)	B

Step	Action	Value (s)	Yes	No
1	Was the “on-board diagnostic (OBD) system check” performed?	-	Go to Step 2	Go to self diag system check
2	Remove Sensor Connector. Has DTC22 been corrected? (Ignore DTC21)	-	Go to Step 3	Go to Step 7
3	1. Jump between Harness signal Terminal and GND terminal at the Sensor side of Connector. 2. Ignition “ON” Has DTC22 been corrected?	-	Go to Step 4	Go to Step 5
4	1. Check Sensor Connector for inter terminal short. After check, repair if necessary. Was Connector Terminal shorted?	-	Go to Step 12	Go to Step 6
5	1. Check GND Circuit for disconnect. After check, repair if necessary. Is GND circuit disconnect?	-	Go to Step 12	Go to Step 11
6	1. Check Sensor Harness signal circuit and power source circuit for short. After check, repair if necessary. Was Harness shorted?	-	Go to Step 12	Go to Step 8
7	1. Check Harness signal circuit and power source for short. After check, repair if necessary. Was Harness shorted?	-	Go to Step 12	Go to Step 11
8	1. Apply 5V to RACK+ TERMINAL. 2. Measure RACK SIG Voltage. Is RACK SIG VOLTAGE as specified?	0.9-2.0V (Idling speed)	Go to Step 9	Go to Step 10
9	1. Check the iron core of RACK Sensor for damage, seizure, and wear. 2. After check, repair if necessary. Was there any trouble in the iron core(RACK end) inside RACK Sensor?	-	Go to Step 12	Go to Step 11
10	Replaced sensor. Was Sensor replaced?	-	Go to Step 12	-
11	Replace the ECM. Is the action complete?	-	Go to Step 12	-
12	1. Reconnect all the connectors removed. 2. Ignition “ON”, Engine “OFF” Is DTC22 all right under Scan Tool Check?	-	Go to Step 13	Go to Step 2
13	Is any current trouble other than DTC 22 displayed by scan tool?	-	Go to trouble code section	Trouble code clear

DTC-P23 SOLENOID SWITCH CONTROL CIRCUIT LOW VOLTAGE

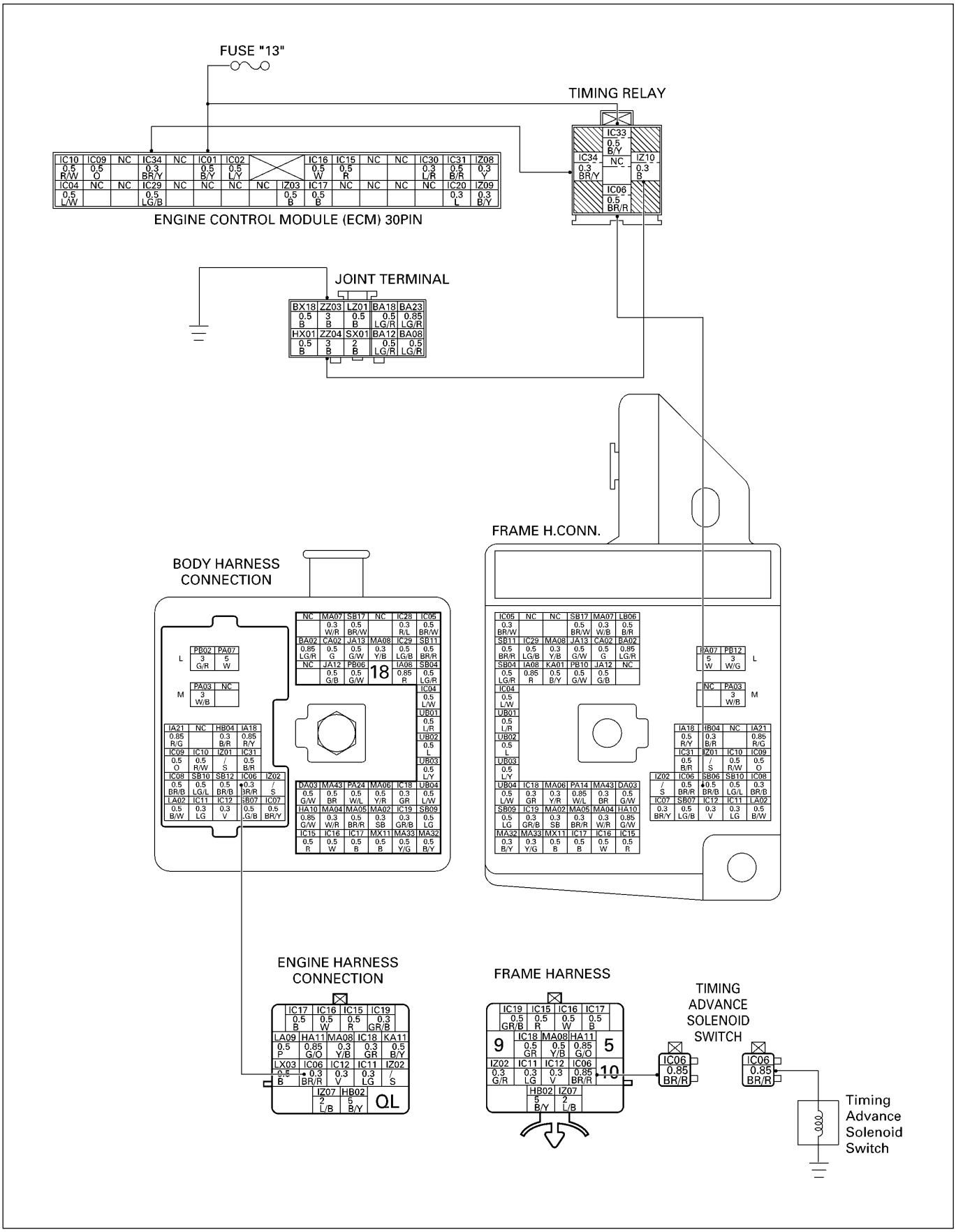

Location of relay

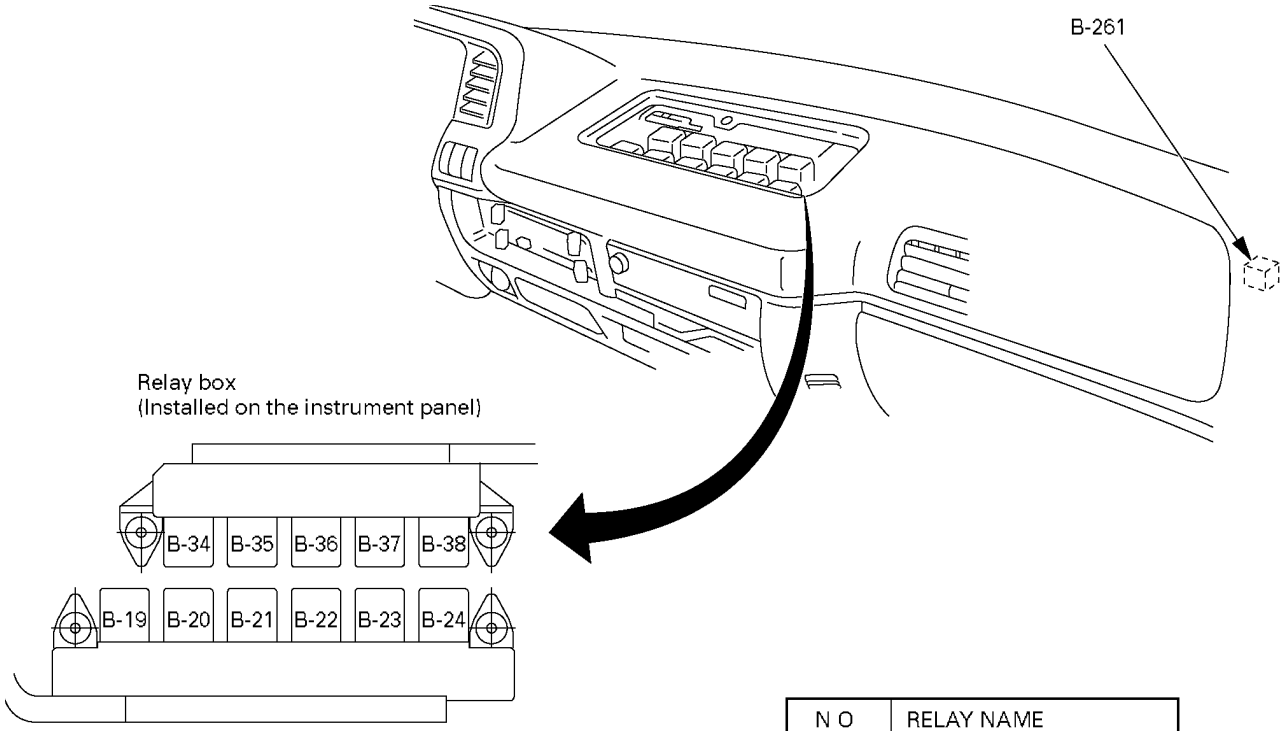

N O	RELAY NAME
B-19	CHARGE
B-20	HEAD LIGHT
B-21	HEATER & A/C
B-22	TAIL
B-23	DIMMER
B-24	HORN
B-34	BUZZER CANCEL
B-35	CORNERING LIGHT
B-36	POWER/WINDOW
B-37	A/C THERMO
B-38	EXH BRAKE
B-261	TIMING

056LW037.tif

Inspection for Timing Advance Solenoid Switch cut relay

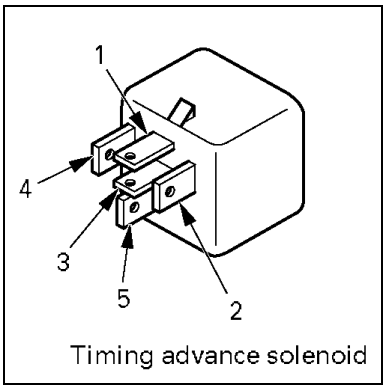

056LW019.tif

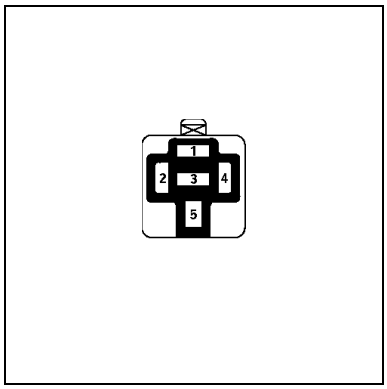

5-12.tif

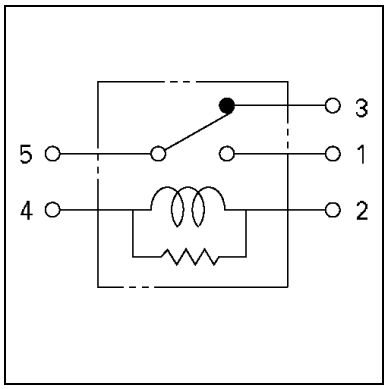

F06HV087.tif

Resistance value

Inspection Point		Resistance	Reference
Inspection relay unit	2 ←→ 4	240 to 290 (Ω) (for 12 volt) 256 to 276 (Ω) (for 24 volt)	
	1 ←→ 5	∞	Not be supplied electricity
		Below 0.5 (Ω)	Be supplied electricity
	3 ←→ 5	Below 0.5 (Ω)	Be supplied electricity
		∞	Not be supplied electricity

Step	Action	Value (s)	Yes	No
1	Was the “on-board diagnostic (OBD) system check” performed?	-	Go to Step 2	Go to self diag system check
2	1. Ignition “OFF”, Engine “ON”. 2. Jumper the magnetic switch Relay ground circuit at the Relay connector to chassis ground. 3. Observe the “Relay; solenoid switch” circuit open status on the scan tool. Has DTC23 been corrected?	-	Go to Step 4	Go to Step 3
3	1. Check for poor connector at the Relay connector and replace the terminals if necessary. Did any terminals require replacement?	-	Go to Step 11	Go to Step 5
4	1. Check the Relay ground circuit for an open. 2. If the Relay ground circuit is open, repair it as necessary. Was the Relay ground circuit open?	-	Go to Step 11	Go to Step 2
5	1. Ignition “OFF”, with scan tool disconnected. 2. Disconnect the Solenoid switch Relay connector. 3. Apply a circuit tester with voltage range or a test light to the output line for the Relay. 4. Ignition “ON”, Measure the voltage or check the test light “ON”. Ignition “OFF”	≧8V or light “ON” (for 12 Volt) ≧16V or light “ON” (for 24 Volt)	Go to Step 8	Go to Step 6
6	6. Ignition “ON”. 7. Disconnect ECM, and check for the Relay signal circuit terminal connector at the ECM and clean or replace terminal if necessary. Did any terminals need to be repaired?	-	Go to Step 11	Go to Step 7
7	1. Check the Relay signal circuit for an open. 2. If the Relay signal circuit is open, repair it as necessary. Was the Relay signal circuit open?	-	Go to Step 11	Go to Step 8
8	1. Disconnect the Relay. 2. Measure the resistance between the coil circuit terminals of the Relay. Is the resistance within specific value?	240~290Ω (for 12 Volt) 256~276Ω (for 24 Volt)	Go to Step 10	Go to Step 9
9	1. Replace the Relay. Is the action complete?	-	Go to Step 11	-
10	1. Replace the ECM Is the action complete?	-	Go to Step 11	-
11	1. Reconnect all the connectors removed. 2. Ignition “ON”, Engine “OFF”. 3. Ignition “OFF” after 30 sec. 4. Install Scan tool. Is DTC 23 all right under Scan Tool Check?	-	Go to Step 12	Go to Step 2
12	Is any other trouble them 23 displayed by scan tool?	-	Go to trouble code section	Trouble code clear

DTC-P24 SOLENOID SWITCH CONTROL CIRCUIT HIGH VOLTAGE

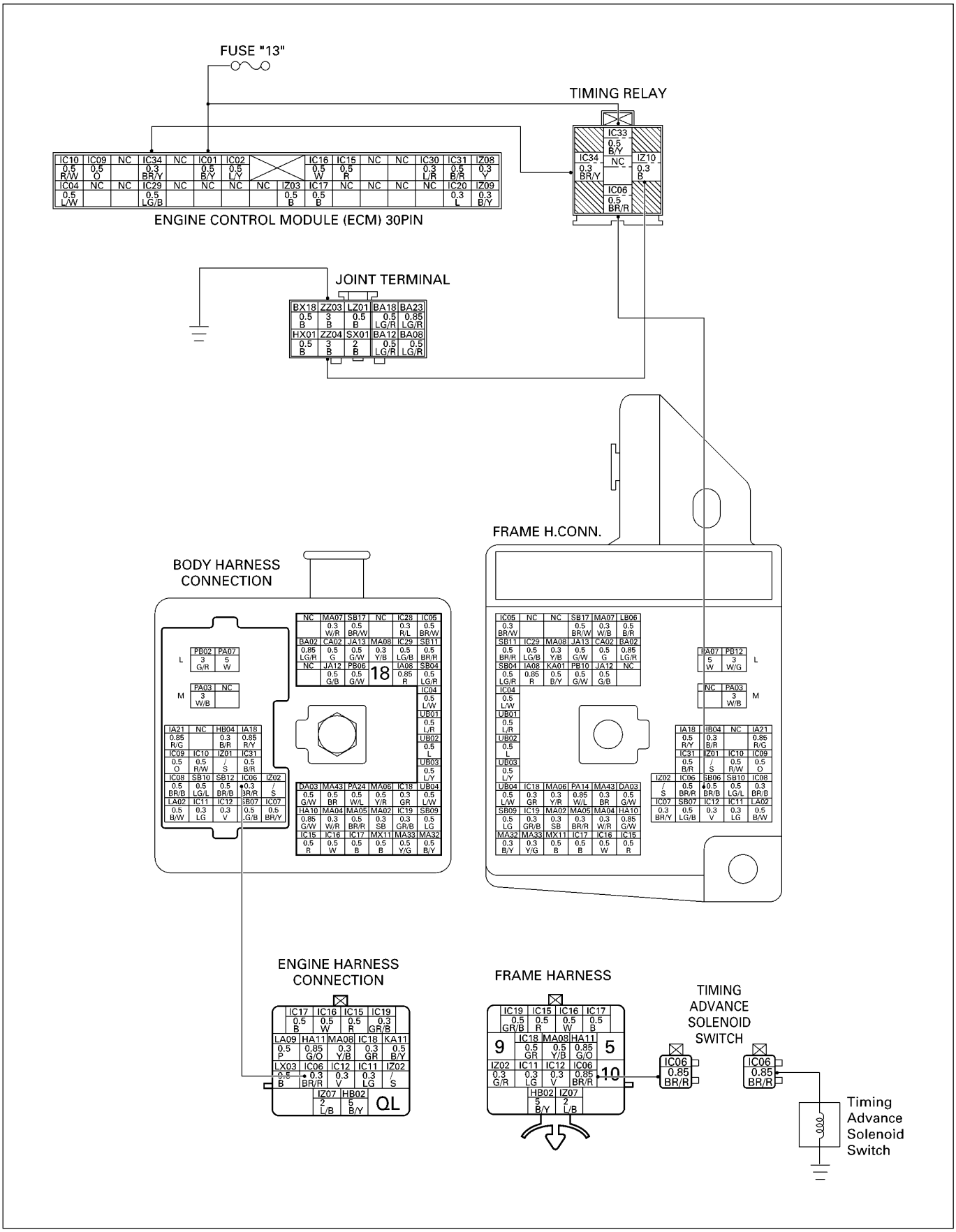

Location of relay

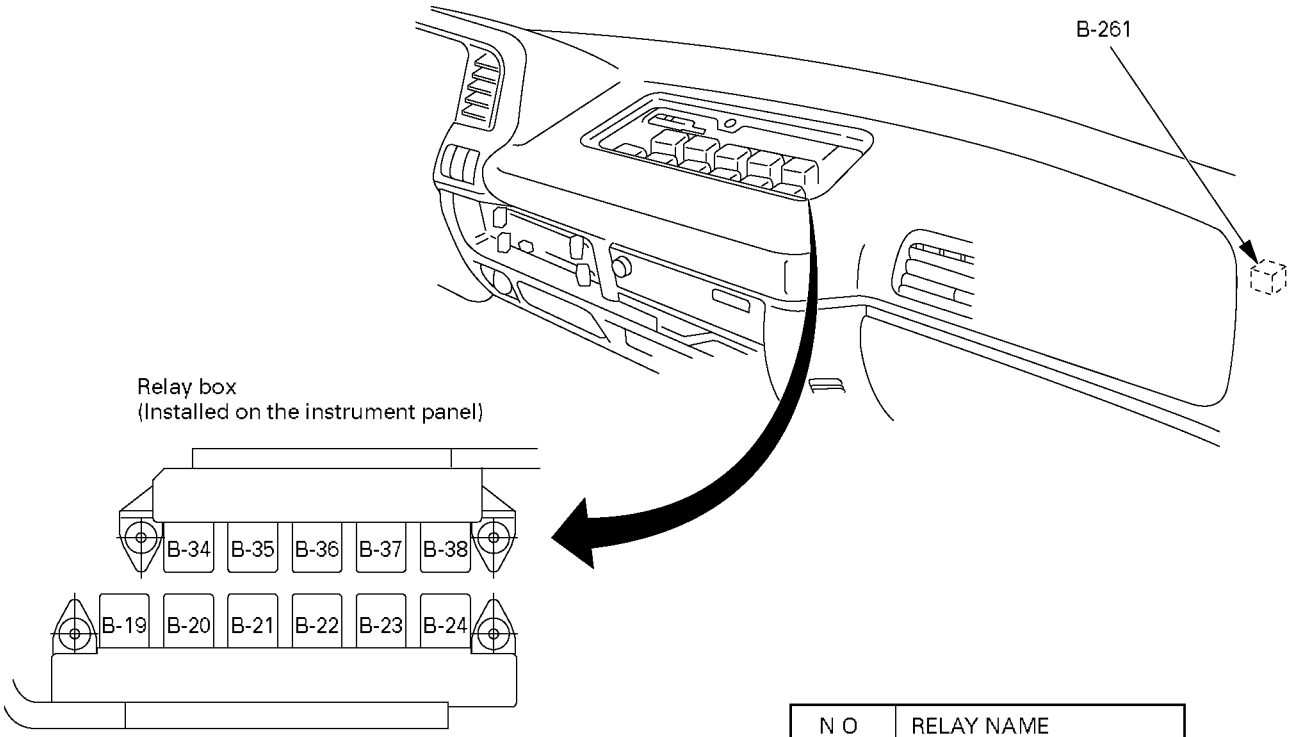

N O	RELAY NAME
B-19	CHARGE
B-20	HEAD LIGHT
B-21	HEATER & A/C
B-22	TAIL
B-23	DIMMER
B-24	HORN
B-34	BUZZER CANCEL
B-35	CORNERING LIGHT
B-36	POWER/WINDOW
B-37	A/C THERMO
B-38	EXH BRAKE
B-261	TIMING

056LW037.tif

Inspection for Timing Advance Solenoid Switch cut relay

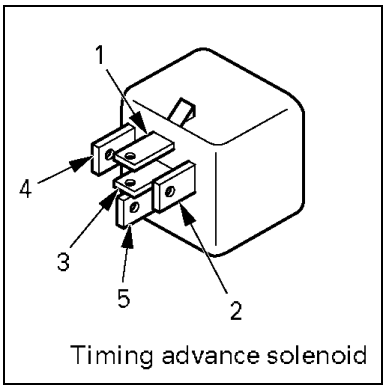

056LW019.tif

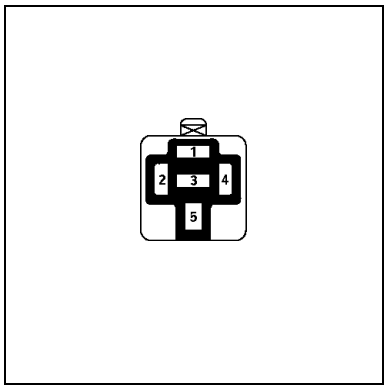

5-12.tif

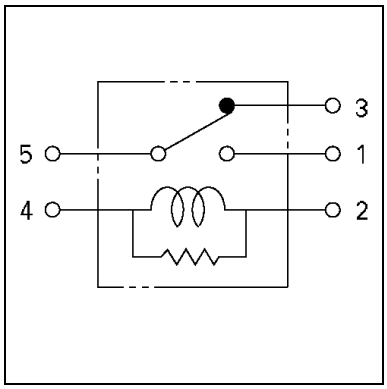

F06HV087.tif

Resistance value

Inspection Point		Resistance	Reference
Inspection relay unit	2 ←→ 4	240 to 290 (Ω) (for 12 volt) 256 to 276 (Ω) (for 24 volt)	
	1 ←→ 5	∞	Not be supplied electricity
		Below 0.5 (Ω)	Be supplied electricity
	3 ←→ 5	Below 0.5 (Ω)	Be supplied electricity
		∞	Not be supplied electricity

Step	Action	Value (s)	Yes	No
1	Was the “on-board diagnostic (OBD) system check” performed?	-	Go to Step 2	Go to self diag system check
2	1. Ignition “OFF”, with scan tool disconnected. 2. Disconnect the Relay solenoid switch from the Relay box. 3. Apply a circuit tester with the voltage range or a test light to the output circuit for the Relay. 4. Ignition “ON”, Engine “OFF”. Is voltage as prescribed, or is test Light lit untils 18 sec?	≧8V or light “ON” (for 12 Volt) ≧16V or light “ON” (for 24 Volt)	Go to Step 6	Go to Step 3
3	1. Ignition “OFF”. 2. Check if there is no short between Relay Box Terminals. 3. Repair if necessary. Shorted between Relay Box Terminals?	-	Go to Step 8	Go to Step 4
4	1. Disconnect the ECM. 2. Check if Relay Sig Circuit for a short to Chassis/GND or short to voltage. 3. Repair if necessary. Was Relay signal circuit shorted?	-	Go to Step 8	Go to Step 6
5	1. Disconnect the Relay. 2. Measure the resistance between the coil circuit terminal of the Relay. Is the resistance with in specific valve.	240~290Ω (for 12 Volt) 256~276Ω (for 24 Volt)	Go to Step 8	Go to Step 6
6	1. Ignition “OFF”. 2. Replace the Relay. Is the action complete?	-	Go to Step 8	-
7	1. Ignition “ON”. 2. Replace the ECM. Is the action complete?	-	Go to Step 8	-
8	1. Reconnect all the connectors removed. 2. Ignition “ON”, Engine OFF, and Ignition off after 30sec. 3. Install Scan tool. 4. Ignition “ON”, Engine “OFF”. Is DTC 24 all right under Scan Tool Check?	-	Go to Step 9	Go to Step 2
9	Is any current trouble other than DTC 24 displayed by scan tool?	-	Go to trouble code section	Trouble code clear

DTC-P26 QUICK WARM SYSTEM (QWS) RELAY CONTROL CIRCUIT HIGH VOLTAGE

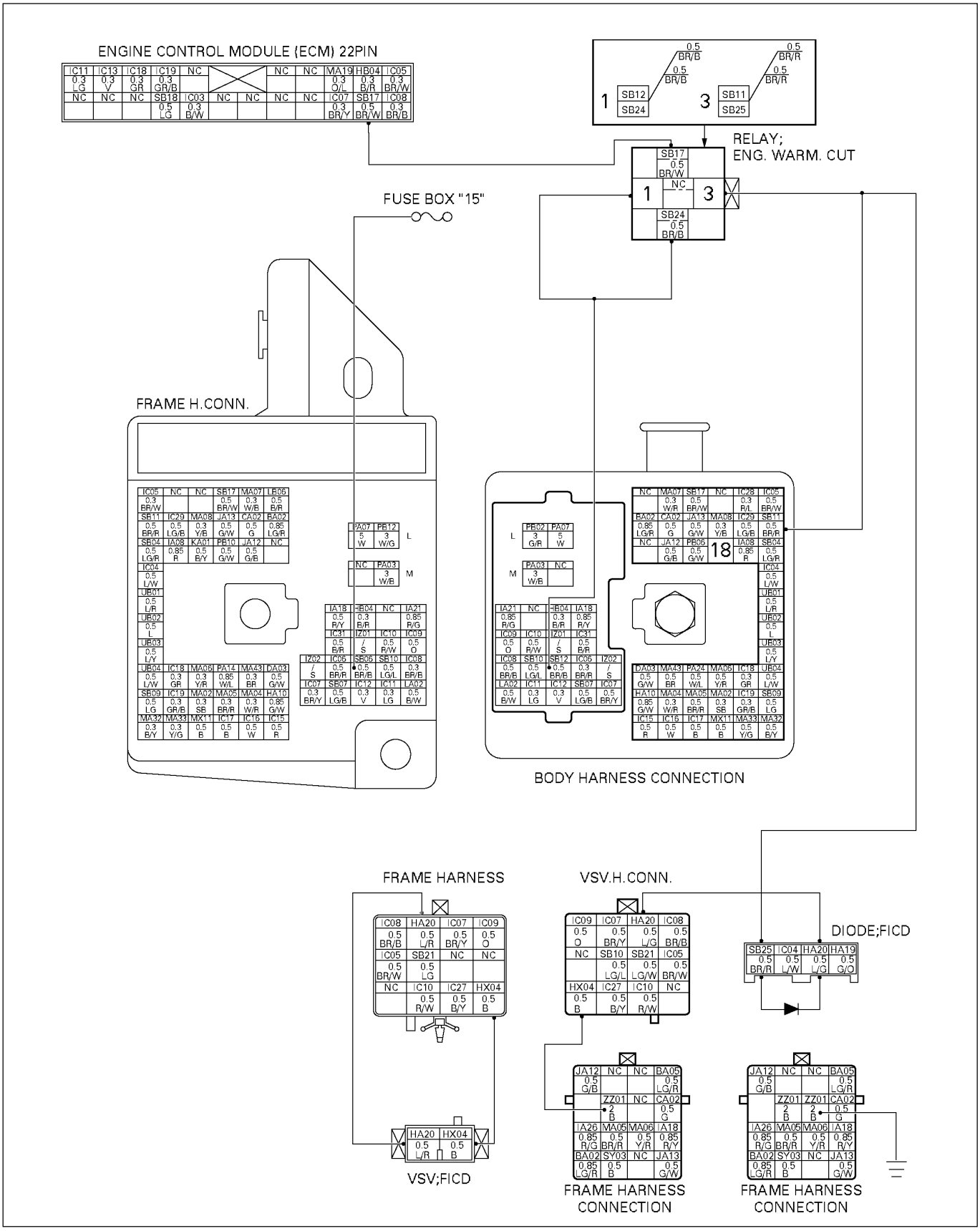

065LW034.tif

Location of relay

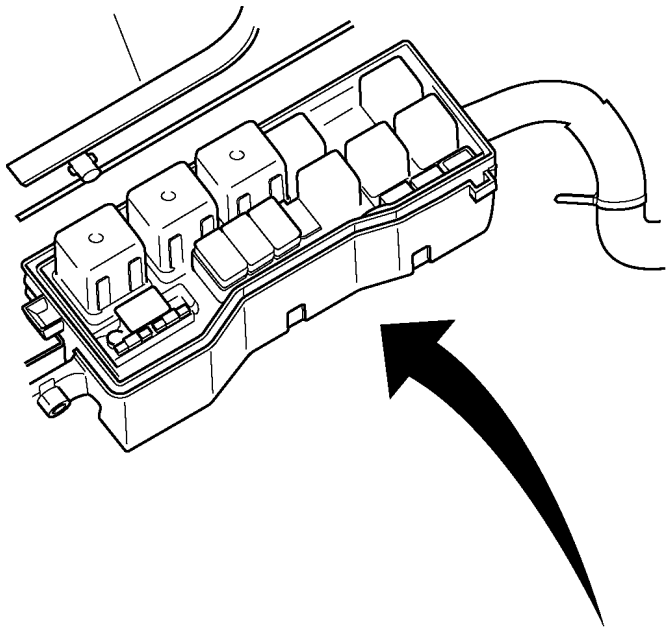

Relay box
(Installed on the left side rear of the cab)

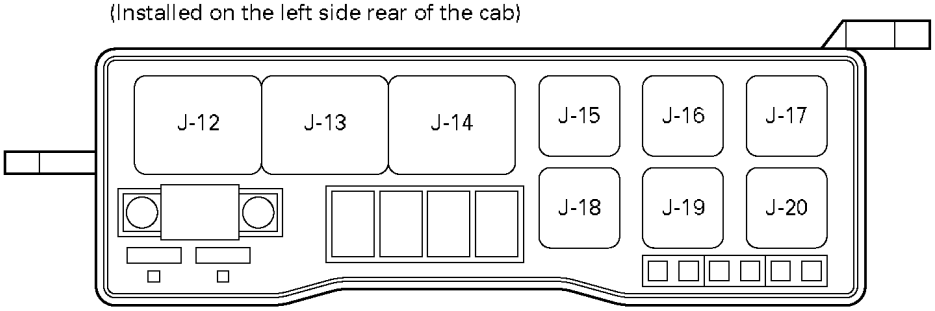

No.	RELAY NAME
J-12	STARTER
J-13	GLOW1 (QOS)
J-14	C/HEATER
J-15	ENG. WARM CUT (QWS)
J-16	———
J-17	CONDENSER FAN
J-18	EXH. BRAKE CONTROL
J-19	———
J-20	MARKER LAMP

826LW038.tif

Inspection for Quick Warm System (QWS) cut relay

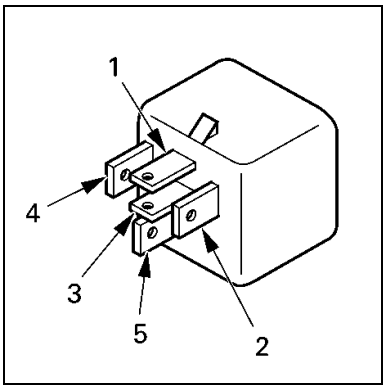

056LX00007

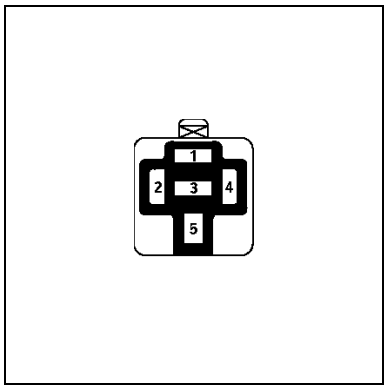

5-12.tif

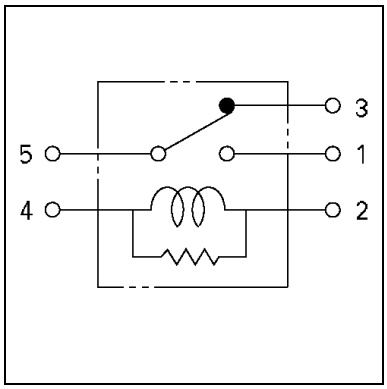

F06HV087.tif

Resistance value

Inspection Point		Resistance	Reference
Inspection relay unit	2 ←→ 4	240 to 290 (Ω) (for 12 volt) 256 to 276 (Ω) (for 24 volt)	
	1 ←→ 5	∞	Not be supplied electricity
		Below 0.5 (Ω)	Be supplied electricity
	3 ←→ 5	Below 0.5 (Ω)	Be supplied electricity
		∞	Not be supplied electricity

Step	Action	Value (s)	Yes	No
1	Was the “on-board diagnostic (OBD) system check” performed?	-	Go to Step 2	Go to self diag system check
2	Using the DVM, check the resistance of inter “2” “4” terminal. Does the DVM read the following Value?	240~290Ω (for 12 Volt) 256~276Ω (for 24 Volt)	Go to Step 3	Go to Step 4
3	1. Ignition “OFF” 2. Disconnect the ECM connector from ECM. 3. Check the short to voltage of Relay circuit between the ECM and Relay connector. 4. Repair if necessary. Has DTC 26 been corrected?	-	Go to Step 6	Go to Step 5
4	Replace the Relay. Is the action complete?	-	Go to Step 6	-
5	Replace the ECM. Is the action complete?	-	Go to Step 6	-
6	1. Reconnect all the connectors removed. 2. Ignition “ON”, Engine “OFF” Is DTC 26 all right under Scan Tool Check?	-	Go to Step 7	Go to Step 2
7	Is any current trouble other than DTC 26 displayed by scan tool?	-	Go to trouble code section	Trouble code clear

DTC-P31 EXHAUST GAS RECIRCULATION (EGR) ELECTRONIC VACUUM REGULATING VALVE (EVRV) SOLENOID CONTROL LOW VOLTAGE

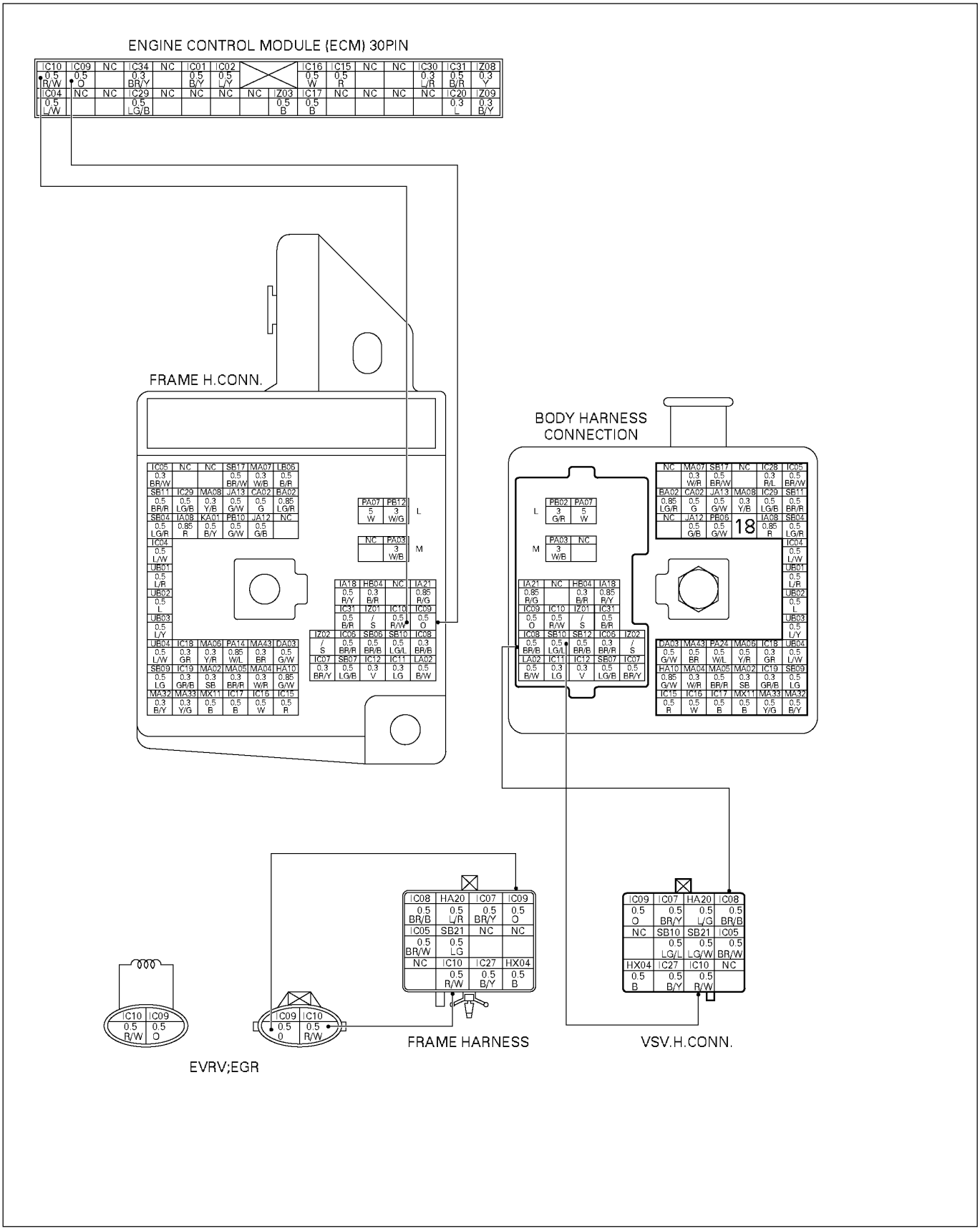

06.5LW041.tif

Appearance of Electronic Vacuum Regulating Valve (EVRV): Exhaust Gas Recirculation (EGR) sensor and connector name

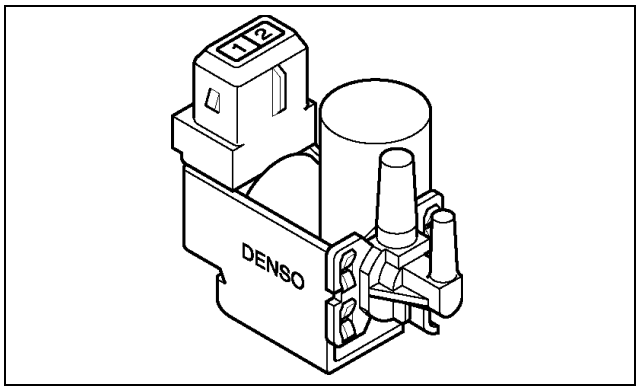

Figure. EVRV:EGR 056LW024.tif

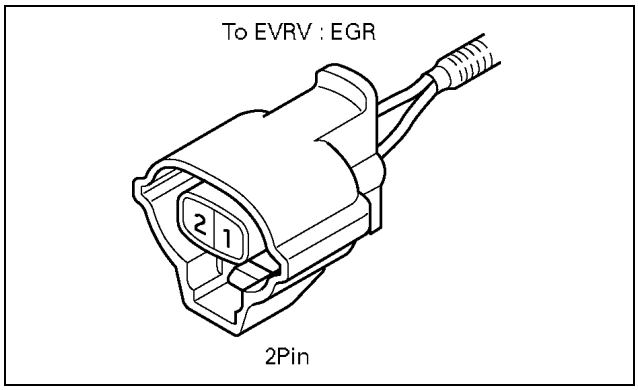

Figure. EVRV:EGR connector 056LW016.tif

Connector No	Signal
1 2	GND SIG

Measure resistance at EVRV: EGR

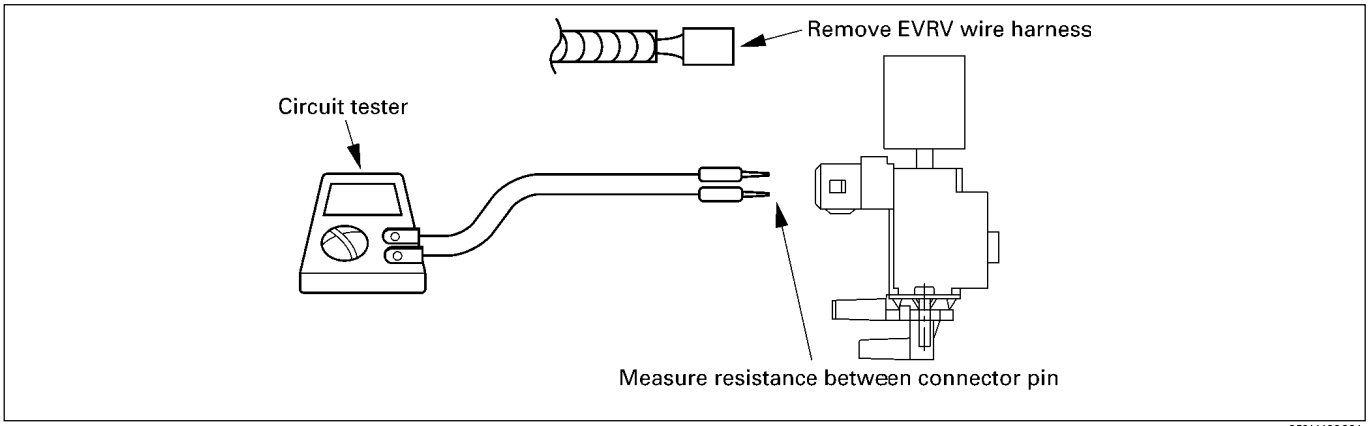

056LY00004

CAUTION:

When measuring resistance with a circuit tester, be careful not to damage or deform the terminals.

Resistance value

Inspection Point		Resistance Value (kΩ)	Reference
Connector	Pin No.		
2 pin Black	2 ←→ 1	12±1 (for 12 volt) 48±2 (for 24 volt)	SIG ←→ GND
	1 ←→ Body	∞	SIG ←→ Body

Note: Resistance value is difference according to the engine temperature (condition of engine warming up)

Step	Action	Value (s)	Yes	No
1	Was the “on-board diagnostic (OBD) system check” performed?	-	Go to Step 2	Go to self diag system check
3	1. Ignition “OFF” 2. Disconnect the EVRV from the wiring harness connector. 3. Check the EVRV signal circuit between the EVRV connector and the ECM for the following condition. * A short to ground * An open circuit 2. Repair if necessary. Has DTC31 been corrected?	-	Go to Step 8	Go to Step 4
4	Using the DVM, check the resistance of the EVRV Does the DVM read the following Value?	12Ω (for 12 Volt) 48Ω (for 24 Volt)	Go to Step 5	Go to Step 6
5	1. Ignition “OFF” 2. Check an open circuit of the EVRV ground circuit between the ECM and EVRV connector. 3. Repair if necessary. Has DTC31 been corrected?	-	Go to Step 8	Go to Step 7
6	Replace the EVRV Is the action complete?	-	Go to Step 8	Go to Step 7
7	Replace the ECM. Is the action complete?	-	Go to Step 8	-
8	1. Reconnect all the connectors removed. 2. Ignition “ON”, Engine “OFF” Is DTC31 all right under Scan Tool Check?	-	Go to Step 9	Go to Step 2
9	Is any current trouble other than DTC31 displayed by scan tool?	-	Go to trouble code section	Trouble code clear

DTC-P32 EXHAUST GAS RECIRCURATION (EGR) ELECTRONIC VACUUM REGULATING VALVE (EVRV) SOLENOID CONTROL HIGH VOLTAGE

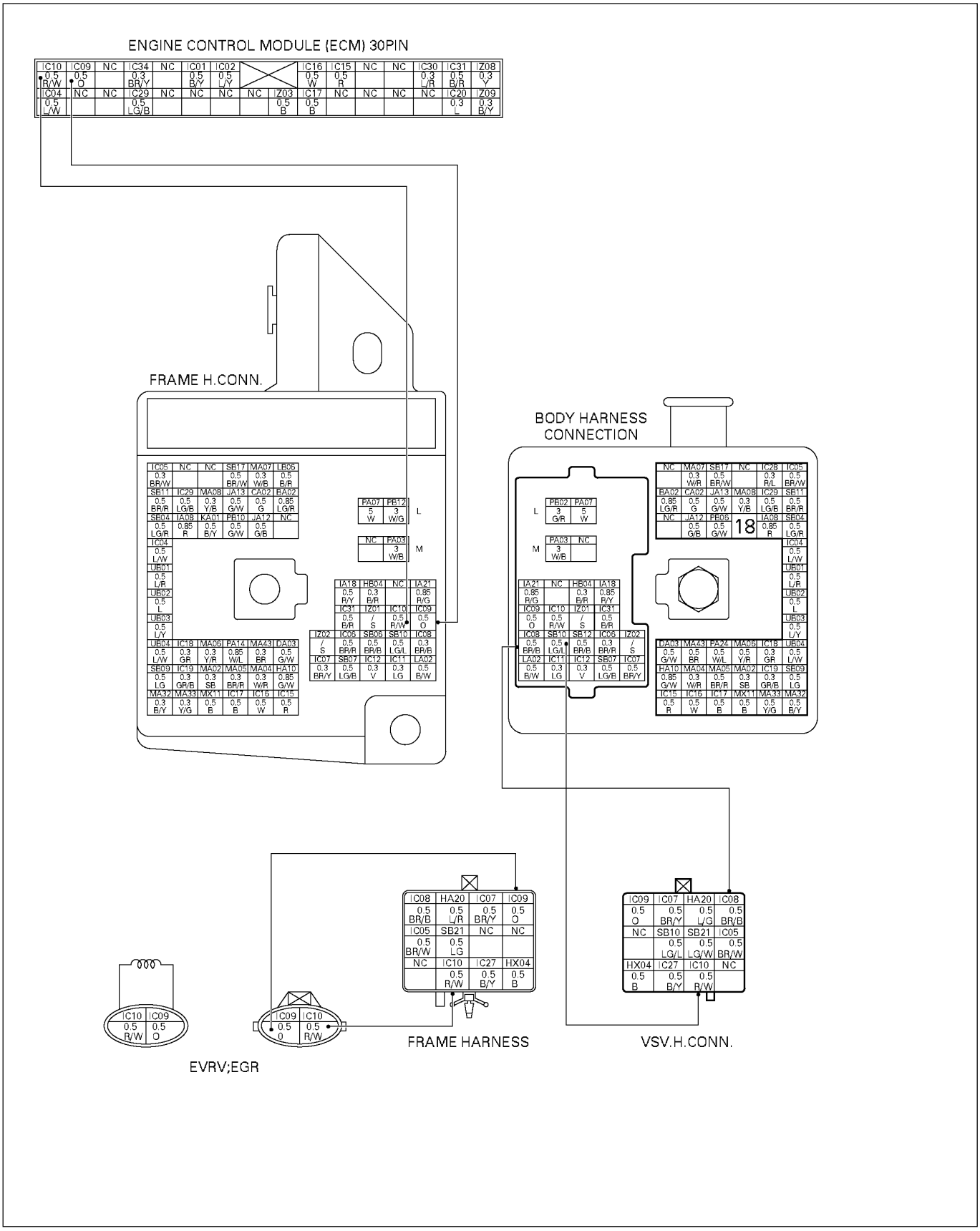

065LW041.tif

Appearance of Electronic Vacuum Regulating Valve (EVRV): Exhaust Gas Recirculation (EGR) and connector name

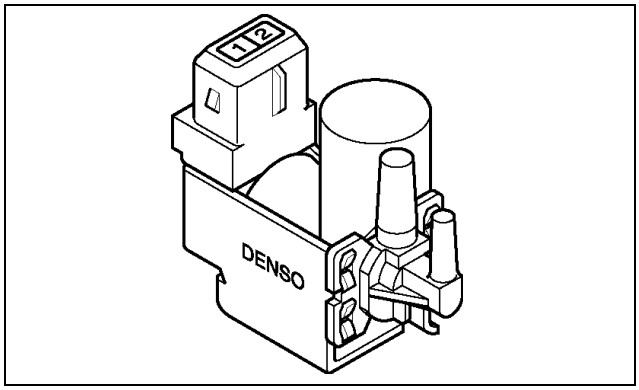

Figure. EVRV:EGR 056LW024.tif

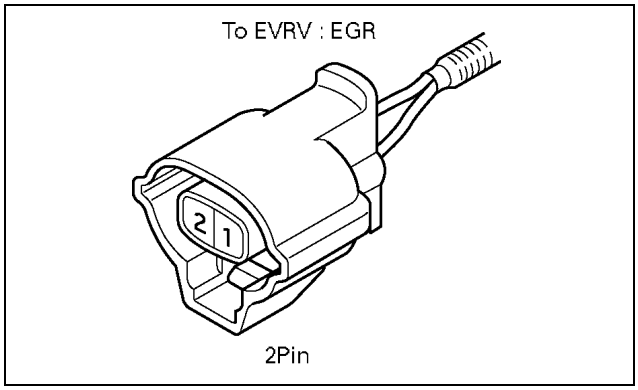

Figure. EVRV:EGR connector 056LW016.tif

Connector No	Signal
1 2	GND SIG

Measure resistance at EVRV: EGR

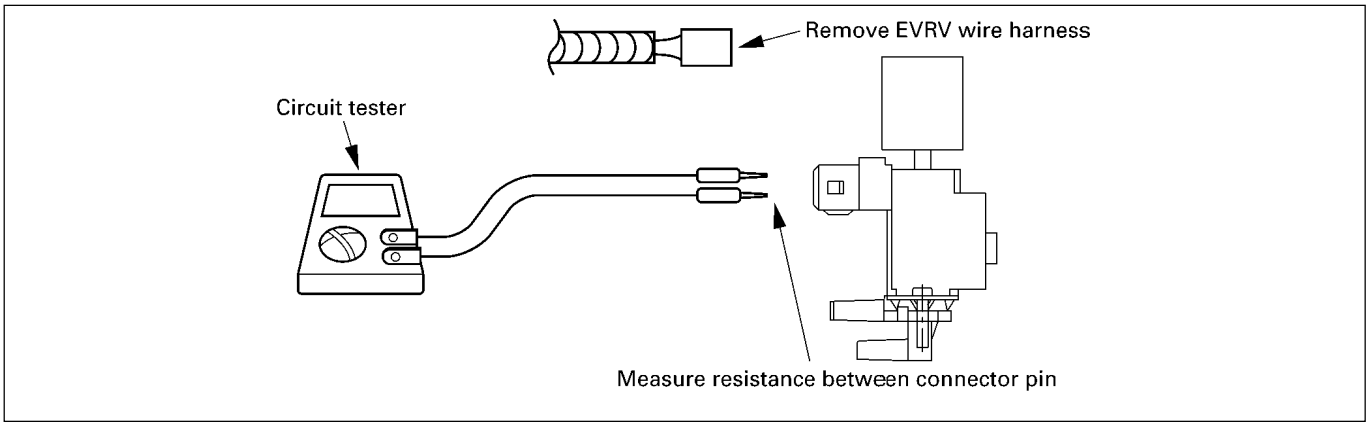

056LY00004

CAUTION:

When measuring resistance with a circuit tester, be careful not to damage or deform the terminals.

Resistance value

Inspection Point		Resistance Value (kΩ)	Reference
Connector	Pin No.		
2 pin Black	2 ←→ 1	12±1 (for 12 volt) 48±2 (for 24 volt)	SIG ←→ GND
	1 ←→ Body	∞	SIG ←→ Body

Note: Resistance value is difference according to the engine temperature (condition of engine warming up)

Step	Action	Value (s)	Yes	No
1	Was the “on-board diagnostic (OBD) system check” performed?	-	Go to Step 2	Go to self diag system check
2	1. Ignition “OFF” 2. Disconnect the EVRV from the wiring harness connector. 3. Check a short to voltage of the EVRV signal circuit and GND circuit between the EVRV connector and the ECM. 4. Repair if necessary. Has DTC32 been corrected?	-	Go to Step 5	Go to Step 3
3	1. Ignition “OFF” 2. Disconnect the ECM connector from ECM. 3. Check the short to voltage of EVRV circuit between the ECM and EVRV connector 4. Repair if necessary. Has DTC32 been corrected?	-	Go to Step 5	Go to Step 4
4	Replace the ECM. Is the action complete?		Go to Step 5	-
5	1. Reconnect all the connectors removed. 2. Ignition “ON”, Engine “OFF” Is DTC32 all right under Scan Tool Check?	-	Go to Step 6	Go to Step 2
6	Is any current trouble other than DTC32 displayed by scan tool?	-	Go to trouble code section	Trouble code clear

DTC-P33 VARIABLE SWIRL SYSTEM (VSS) CONTROL CIRCUIT LOW VOLTAGE

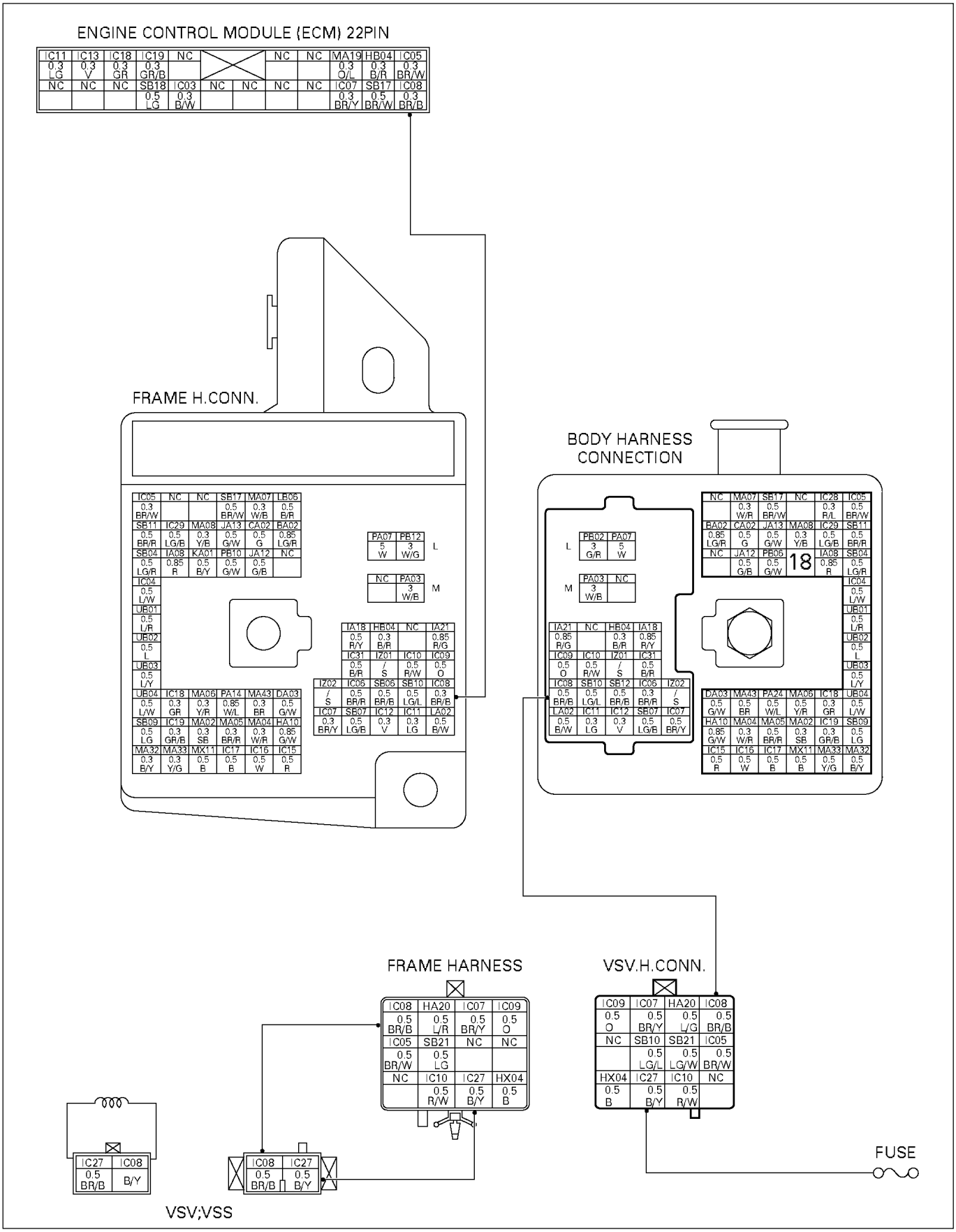

065LW039.tif

Appearance of VSV for VSS and connector name

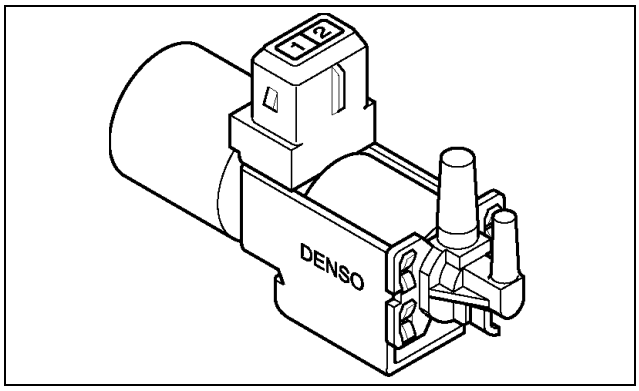

Figure. VSV for VSS 056LW001.tif

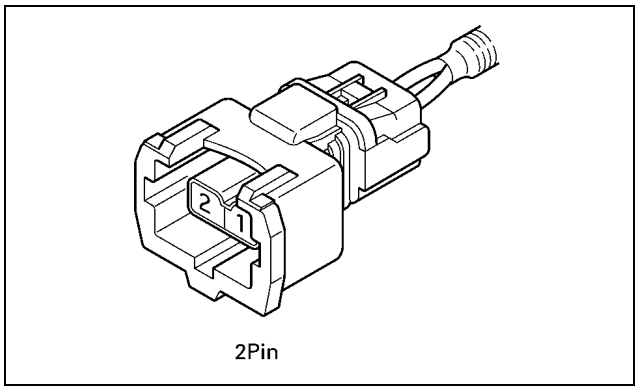

Figure. VSV connector 056LY00003

Connector No	Signal
1 2	SIG GND

Measure resistance at VSV for VSS

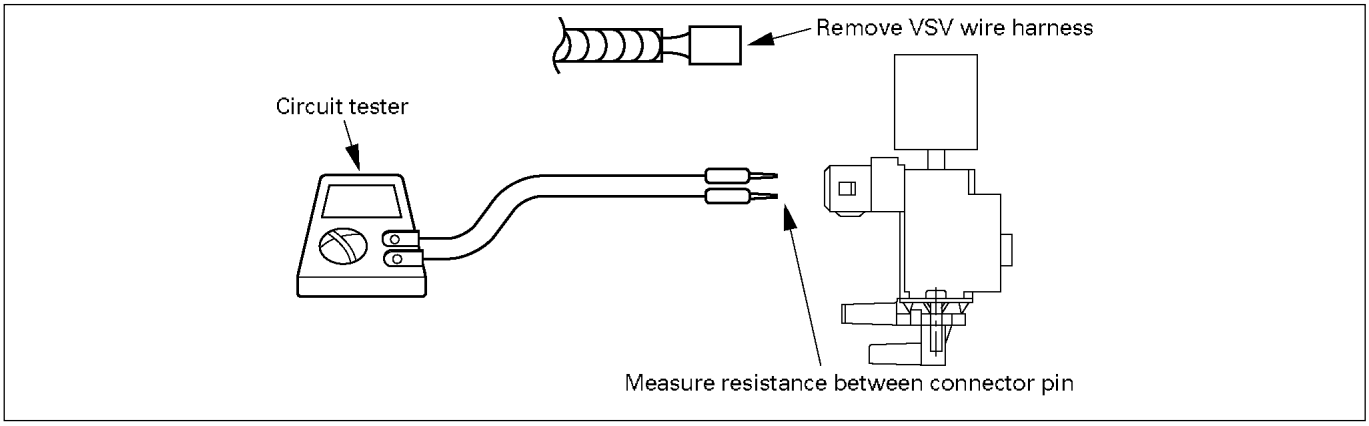

056LW005.tif

CAUTION:

When measuring resistance with a circuit tester, be careful not to damage or deform the terminals.

Resistance value

Inspection Point		Resistance Value (kΩ)	Reference
Connector	Pin No.		
2 pin Gray	2 ←→ 1	37 to 44 (for 12 volt) 159 to 169 (for 24 volt)	SIG ←→ GND
	1 ←→ Body	∞	SIG ←→ Body

Note: Resistance value is difference according to the engine temperature (condition of engine warming up)

Step	Action	Value (s)	Yes	No
1	Was the “on-board diagnostic (OBD) system check” performed?	-	Go to Step 2	Go to self diag system check
2	1. Ignition “OFF” 2. Disconnect the VSV from the wiring harness connector. 3. Ignition “ON” Engine “OFF” 4. Using the Digital Voltmeter (DVM), check for voltage on the “IC27” of the VSV harness connector. Does the DVM read the following value?	12 Volt or 24 Volt	Go to Step 4	Go to Step 3
3	1. Check the suspect circuit between the VSV connector and “Engine Ignition.” Fuse for the following condition. * A short to ground * An open circuit 2. Repair if necessary. Has DTC 33 been corrected?	-	Go to Step 8	-
4	Using the DVM, check the resistance of the VSV Does the DVM read the following Value?	37 ~ 44Ω (for 12 Volt) 159 ~ 169Ω (for 24 Volt)	Go to Step 5	Go to Step 6
5	1. Ignition “OFF” 2. Disconnect the ECM connector from ECM. 3. Check the VSV circuit between the ECU and VSV connector * A short to ground * An open circuit 2. Repair if necessary. Has DTC 33 been corrected?	-	Go to Step 8	Go to Step 7
6	Replace the VSV Is the action complete?	-	Go to Step 8	-
7	Replace the ECM. Is the action complete?	-	Go to Step 8	-
8	1. Reconnect all the connectors removed. 2. Ignition “ON”, Engine “OFF” Is DTC 33 all right under Scan Tool Check?	-	Go to Step 9	Go to Step 2
9	Is any current trouble other than DTC 33 displayed by scan tool?	-	Go to trouble code section	Trouble code clear

DTC-P34 VARIABLE SWIRL SYSTEM (VSS) CONTROL CIRCUIT HIGH VOLTAGE

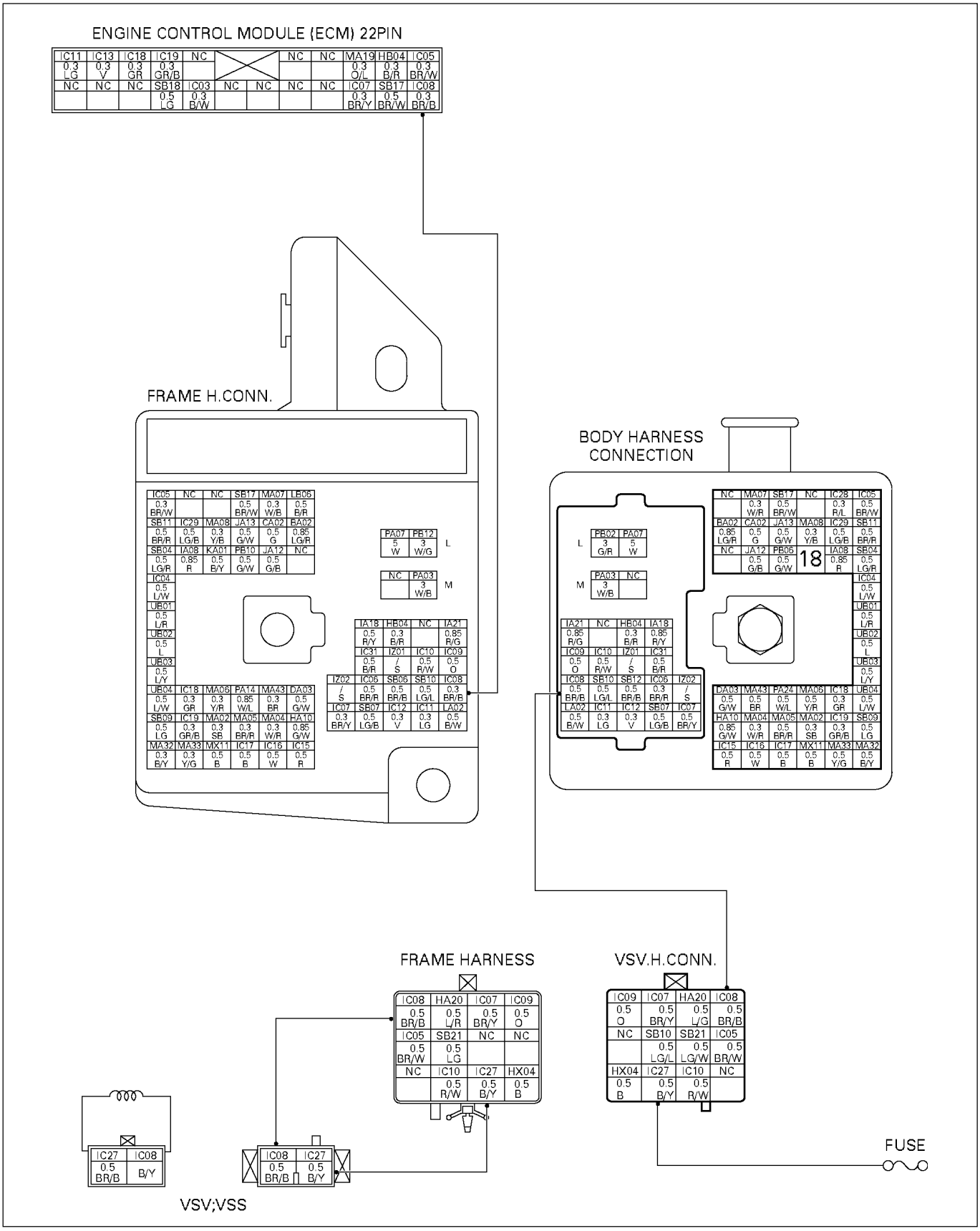

Appearance of VSV for VSS and connector name

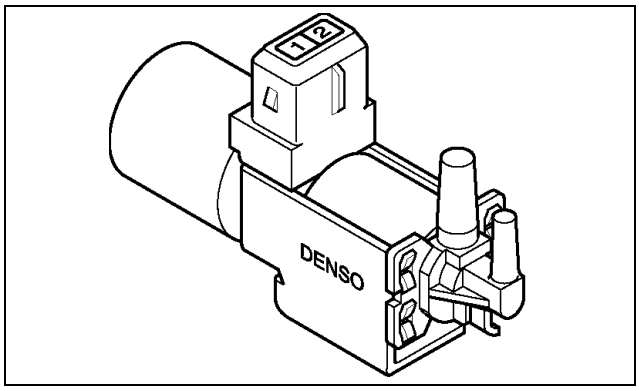

Figure. VSV for VSS 056LW001.tif

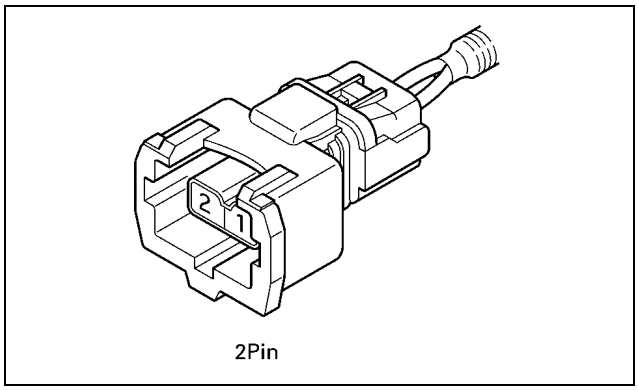

Figure. VSV connector 056LY00003

Connector No	Signal
1 2	SIG GND

Measure resistance at VSV for VSS

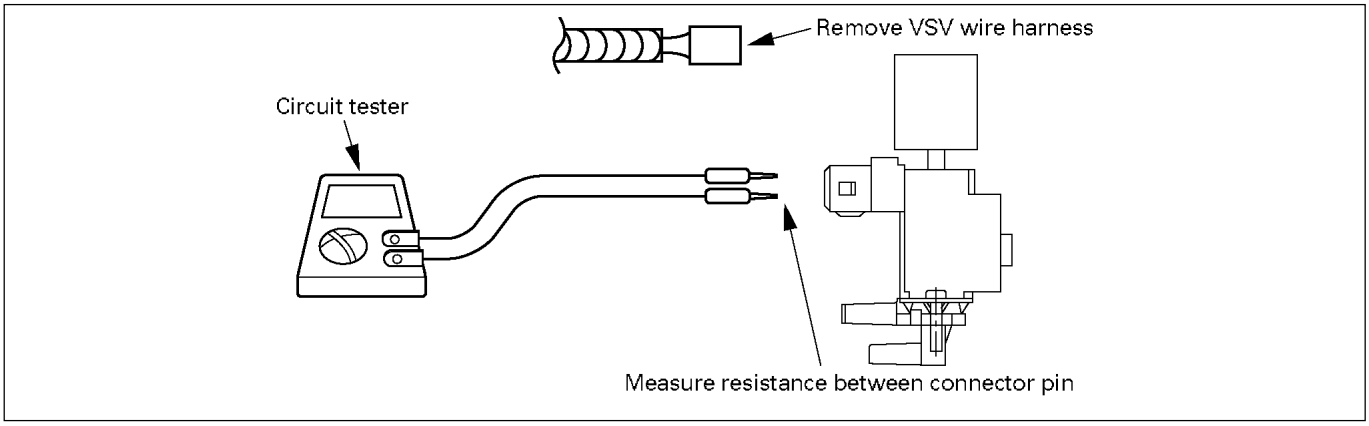

056LW005.tif

CAUTION:

When measuring resistance with a circuit tester, be careful not to damage or deform the terminals.

Resistance value

Inspection Point		Resistance Value (kΩ)	Reference
Connector	Pin No.		
2 pin Gray	2 ←→ 1	37 to 44 (for 12 volt) 159 to 169 (for 24 volt)	SIG ←→ GND
	1 ←→ Body	∞	SIG ←→ Body

Note: Resistance value is difference according to the engine temperature (condition of engine warming up)

Step	Action	Value (s)	Yes	No
1	Was the “on-board diagnostic (OBD) system check” performed?	-	Go to Step 2	Go to self diag system check
2	Using the DVM, check the resistance of the VSV Does the DVM read the following Value?	37 ~ 44Ω (for 12 Volt) 159 ~ 169Ω (for 24 Volt)	Go to Step 3	Go to Step 4
3	1. Ignition “OFF” 2. Disconnect the ECM connector from ECM. 3. Check the short to voltage of VSV circuit between the ECM and VSV connector 4. Repair if necessary. Has DTC 34 been corrected?	-	Go to Step 6	Go to Step 5
4	Replace the VSV Is the action complete?	-	Go to Step 6	-
5	Replace the ECM. Is the action complete?	-	Go to Step 6	-
6	1. Reconnect all the connectors removed. 2. Ignition “ON”, Engine “OFF” Is DTC 34 all right under Scan Tool Check?	-	Go to Step 7	Go to Step 2
7	Is any current trouble other than DTC 34 displayed by scan tool?	-	Go to trouble code section	Trouble code clear

DTC-P35 EXHAUST GAS RECIRCULATION (EGR) QUICK CUT VACUUM SWITCHING VALVE (VSV) CONTROL CIRCUIT LOW VOLTAGE

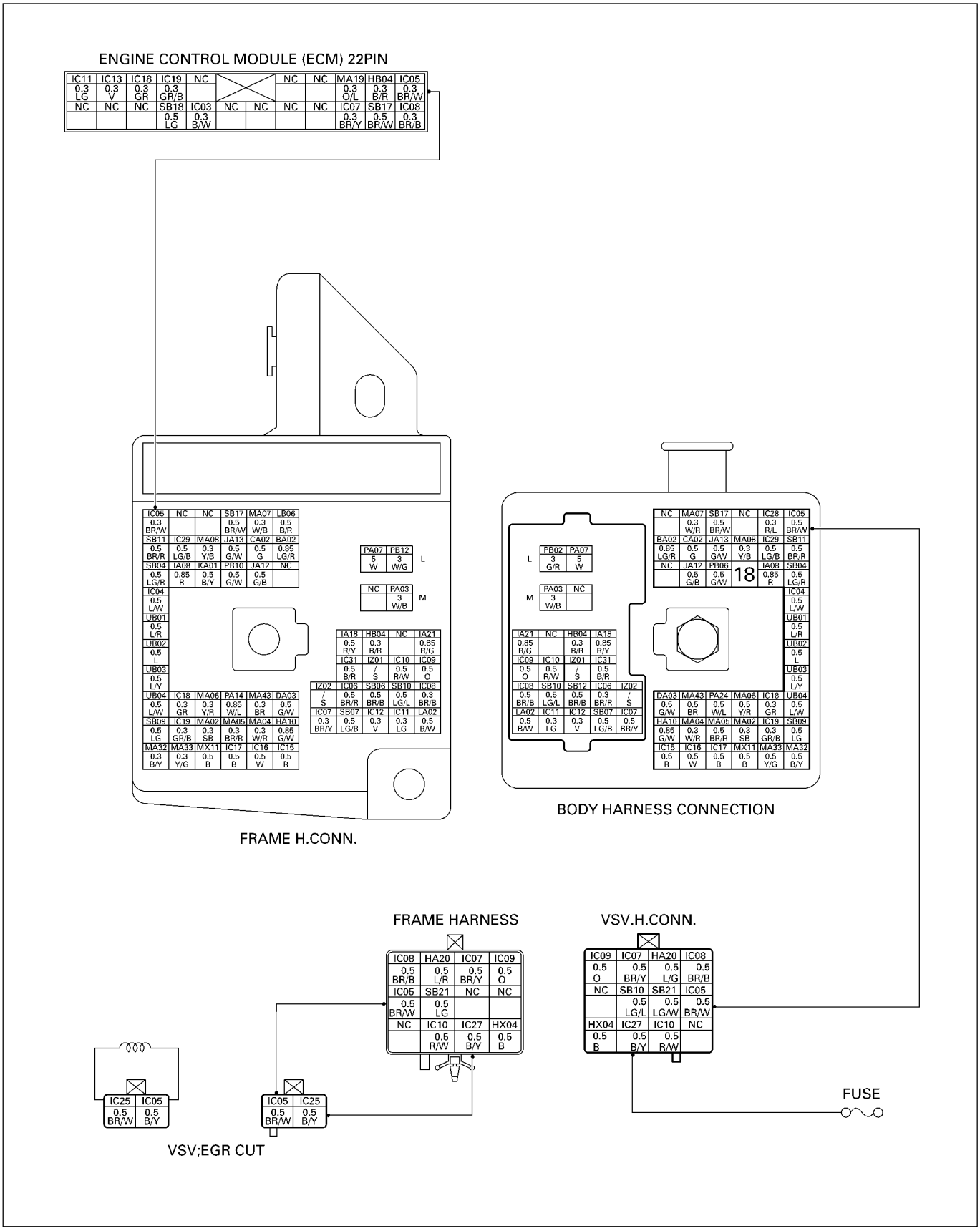

065LW036

Appearance of Vacuum Switching Valve (VSV): Exhaust Gas Recirculation(EGR) CUT and connector name

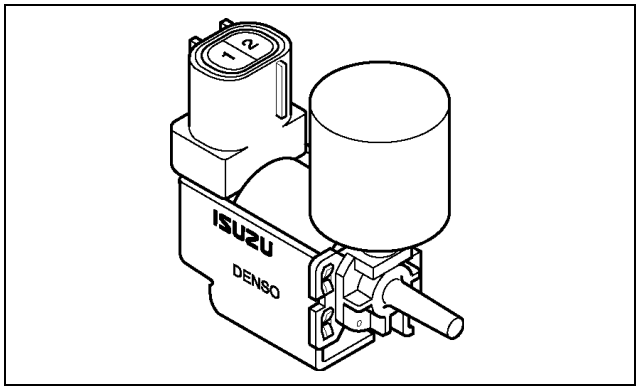

Figure. VSV:EGR CUT 056LW002.tif

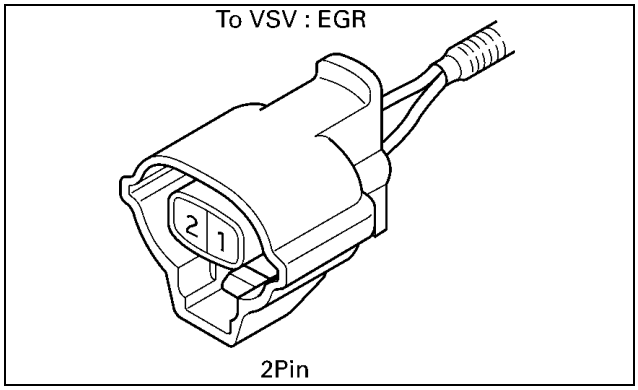

Figure. VSV:EGR CUT connector 056LW016-1

Connector No	Signal
1 2	SIG GND

Measure resistance at VSV:EGR CUT

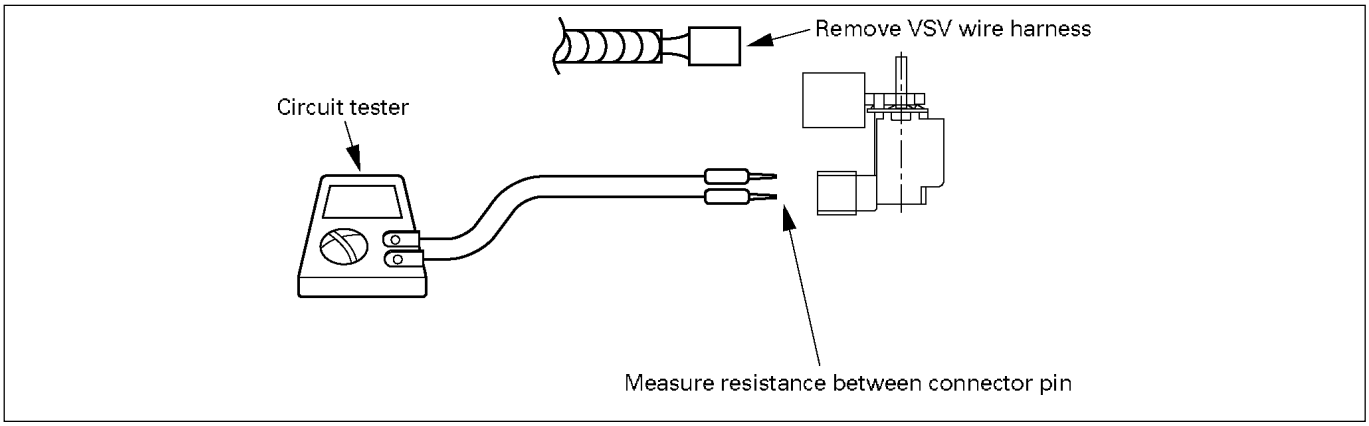

056LW004.tif

CAUTION:

When measuring resistance with a circuit tester, be careful not to damage or deform the terminals.

Resistance value

Inspection Point		Resistance Value (kΩ)	Reference
Connector	Pin No.		
2 pin Black	2 ←→ 1	37 to 44 (for 12 volt) 159 to 169 (for 24 volt)	SIG ←→ GND
	1 ←→ Body	∞	SIG ←→ Body

Note: Resistance value is difference according to the engine temperature (condition of engine warming up)

Step	Action	Value (s)	Yes	No
1	Was the “on-board diagnostic (OBD) system check” performed?	-	Go to Step 2	Go to self diag system check
2	1. Ignition “’OFF” 2. Disconnect the VSV from the wiring harness connector. 3. Ignition “ON” Engine “OFF” 4. Using the Digital Voltmeter (DVM), check for voltage on the “IC25” of the VSV harness connector. Does the DVM read the following value?	12 Volt or 24 Volt	Go to Step 4	Go to Step 3
3	1. Check the suspect circuit between the VSV connector and “Engine Ignition.” Fuse for the following condition. * A short to ground * An open circuit 2. Repair if necessary. Has DTC 35 been corrected?	-	Go to Step 8	-
4	Using the DVM, check the resistance of the VSV Does the DVM read the following Value?	37 ~ 44Ω (for 12 Volt) 159 ~ 169Ω (for 24 Volt)	Go to Step 5	Go to Step 6
5	1. Ignition “OFF” 2. Disconnect the ECM connector from ECM. 3. Check the VSV circuit between the ECM and VSV connector * A short to ground * An open circuit 2. Repair if necessary. Has DTC 35 been corrected?	-	Go to Step 8	Go to Step 7
6	Replace the VSV Is the action complete?	-	Go to Step 8	-
7	Replace the ECM. Is the action complete?	-	Go to Step 8	-
8	1. Reconnect all the connectors removed. 2. Ignition “ON”, Engine “OFF” Is DTC 35 all right under Scan Tool Check?	-	Go to Step 9	Go to Step 2
9	Is any current trouble other than DTC 35 displayed by scan tool?	-	Go to trouble code section	Trouble code clear

DTC-P36 EXHAUST GAS RECIRCULATION (EGR) QUICK CUT VACUUM SWITCHING VALVE (VSV) CONTROL CIRCUIT HIGH VOLTAGE

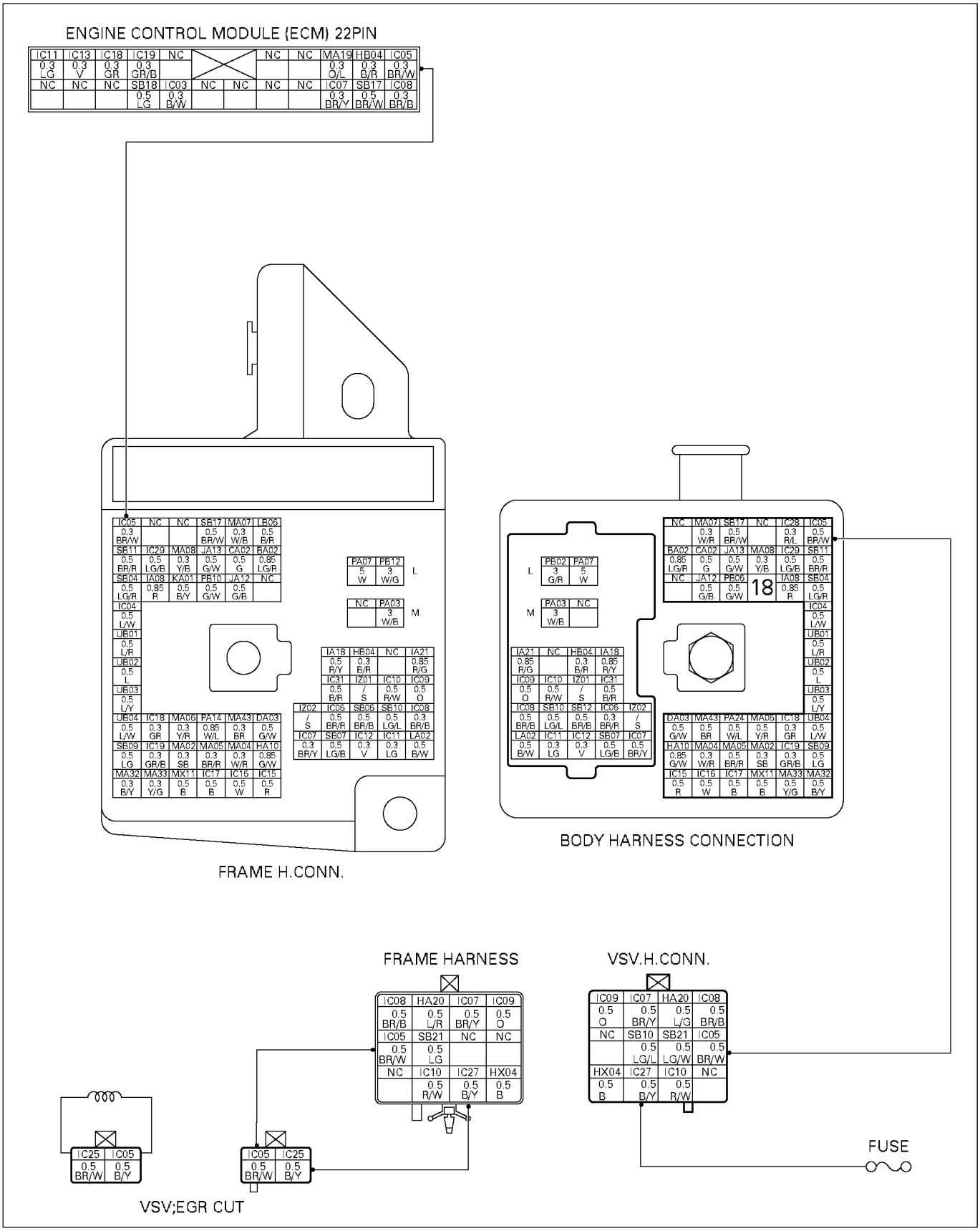

065LW036.tif

Appearance of Vacuum Switching Valve (VSV): Exhaust Gas Recirculation(EGR) CUT sensor and connector name

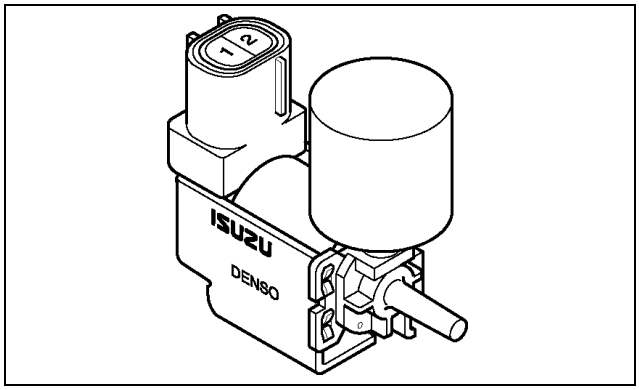

Figure. VSV:EGR CUT

056LW002.tif

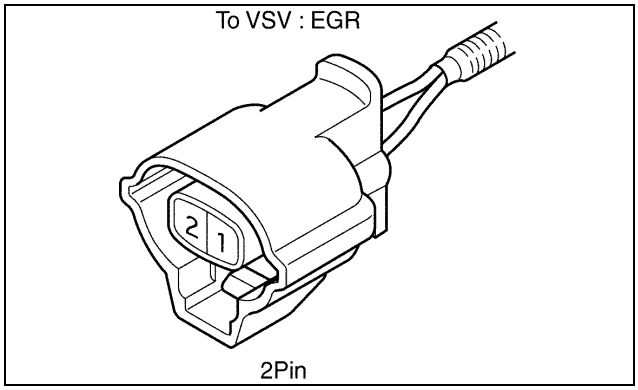

Figure. VSV:EGR CUT connector

056LW016.tif

Connector No	Signal
1 2	SIG GND

Measure resistance at VSV:EGR CUT

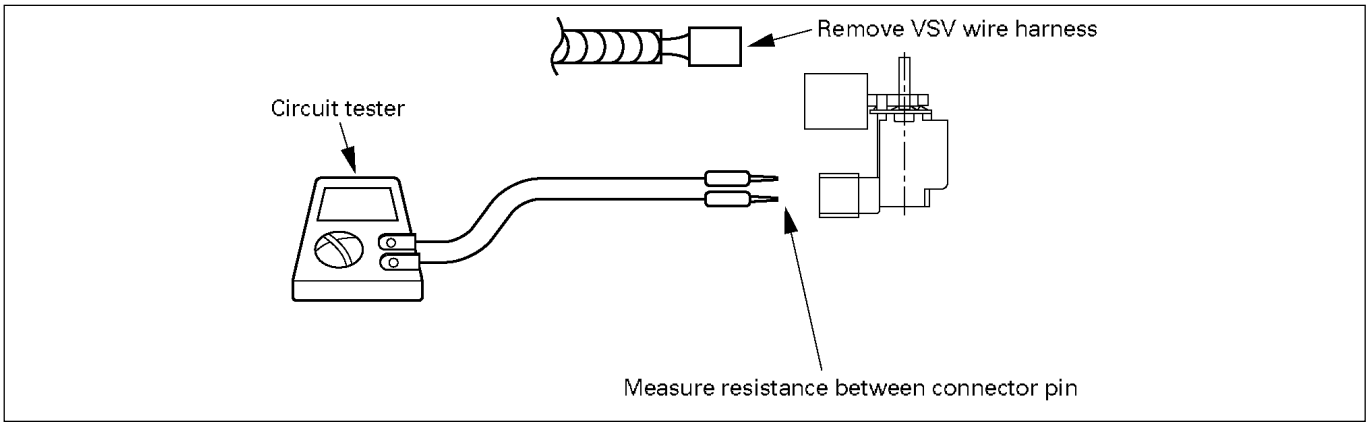

056LW004.tif

CAUTION:

When measuring resistance with a circuit tester, be careful not to damage or deform the terminals.

Resistance value

Inspection Point		Resistance Value (kΩ)	Reference
Connector	Pin No.		
2 pin Black	2 ←→ 1	37 to 44 (for 12 volt) 159 to 169 (for 24 volt)	SIG ←→ GND
	1 ←→ Body	∞	SIG ←→ Body

Note: Resistance value is difference according to the engine temperature (condition of engine warming up)

Step	Action	Value (s)	Yes	No
1	Was the “on-board diagnostic (OBD) system check” performed?	-	Go to Step 2	Go to self diag system check
2	Using the DVM, check the resistance of the VSV Does the DVM read the following Value?	37 ~ 44Ω (for 12 Volt) 159 ~ 169Ω (for 24 Volt)	Go to Step 3	Go to Step 4
3	1. Ignition “OFF” 2. Disconnect the ECM connector from ECM. 3. Check the short to voltage of VSV circuit between the ECM and VSV connector 4. Repair if necessary. Has DTC 36 been corrected?	-	Go to Step 6	Go to Step 5
4	Replace the VSV Is the action complete?	-	Go to Step 6	-
5	Replace the ECM. Is the action complete?	-	Go to Step 6	-
6	1. Reconnect all the connectors removed. 2. Ignition “ON”, Engine “OFF” Is DTC 36 all right under Scan Tool Check?	-	Go to Step 7	Go to Step 2
7	Is any current trouble other than DTC 36 displayed by scan tool?	-	Go to trouble code section	Trouble code clear

DTC-P41 QUICK ON START (QOS) RELAY CONTROL CIRCUIT LOW VOLTAGE

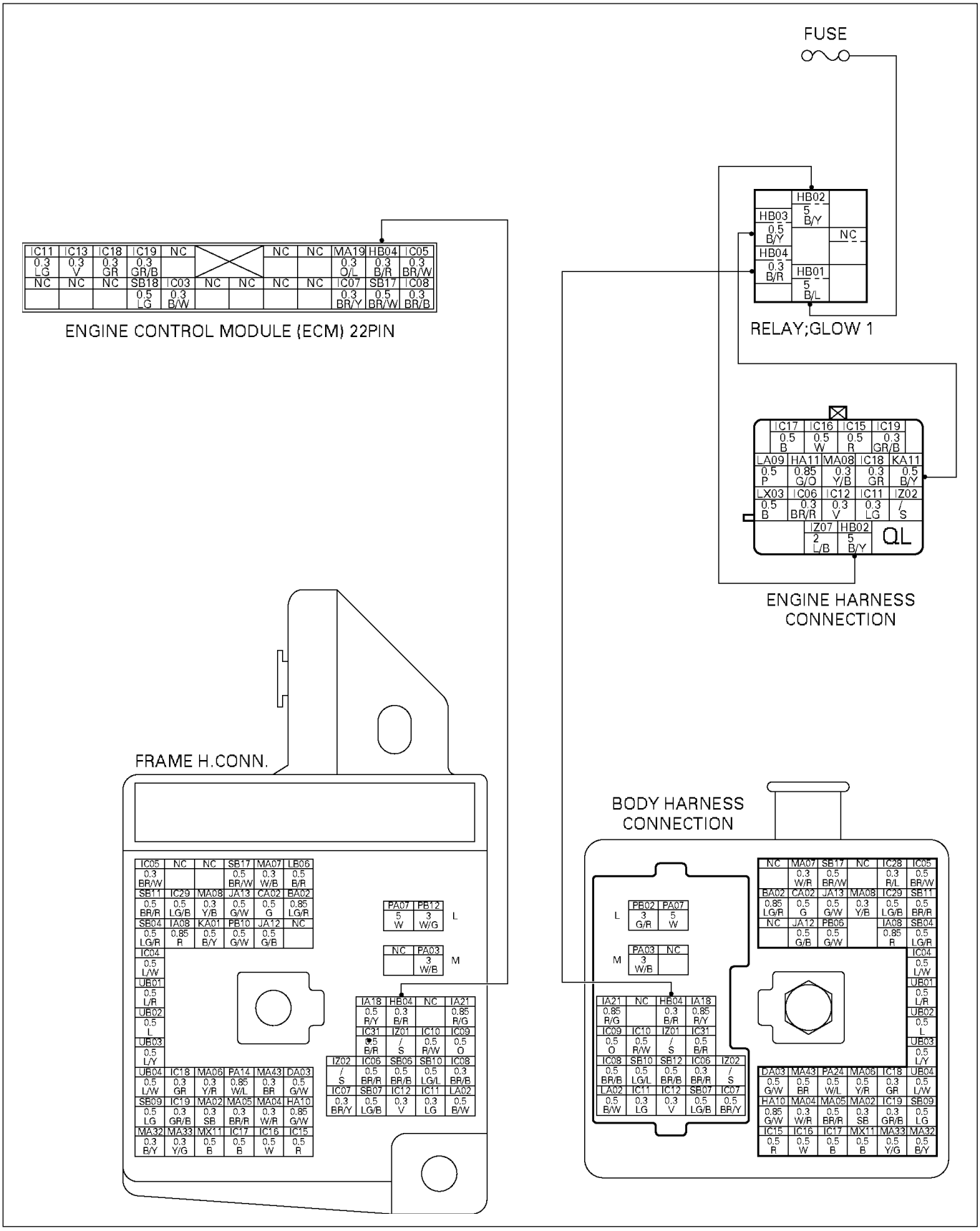

065LW040.tif

Location of relay

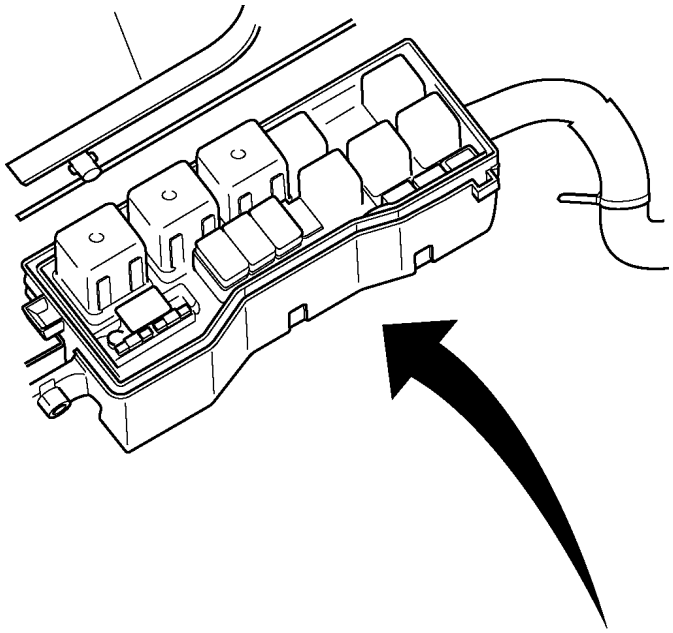

Relay box
(Installed on the left side rear of the cab)

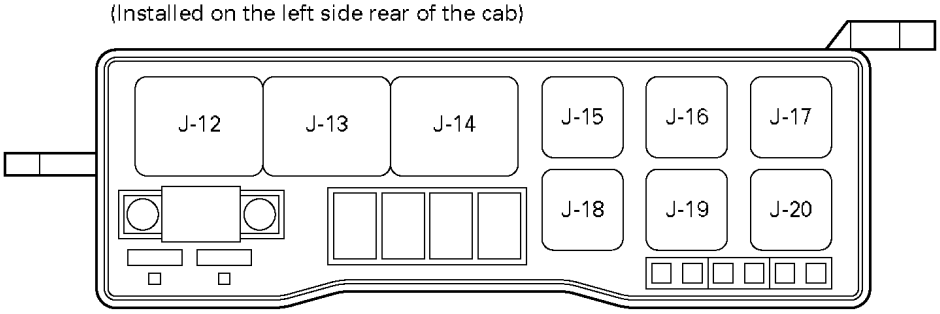

No.	RELAY NAME
J-12	STARTER
J-13	GLOW1 (QOS)
J-14	C/HEATER
J-15	ENG. WARM CUT (QWS)
J-16	———
J-17	CONDENSER FAN
J-18	EXH. BRAKE CONTROL
J-19	———
J-20	MARKER LAMP

826LW038.tif

Inspection for quick on start (QOS) power cut relay

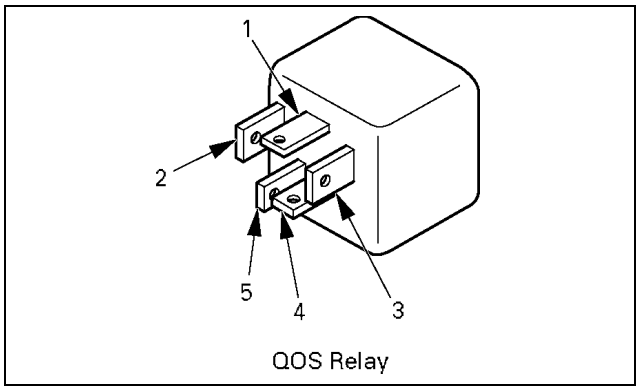

056LW021.tif

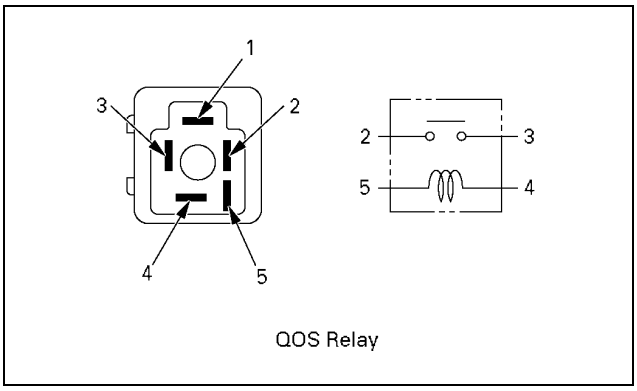

056LW020.tif

Resistance value

Inspection Point		Resistance	Reference
Inspection relay unit	4 ←→ 5	23 (Ω) (for 12 volt) 100 (Ω) (for 24 volt)	
	2 ←→ 3	∞	Not be supplied electricity to coil
		Below 0.5 (Ω)	Be supplied electricity to coil

Step	Action	Value (s)	Yes	No
1	Was the “on-board diagnostic (OBD) system check” performed?	-	Go to Step 2	Go to self diag system check
2	1. Ignition “OFF” 2. Disconnect the Relay from the Relay box connector. 3. Ignition “ON” Engine “OFF” 4. Using the Digital Voltmeter (DVM), check for voltage on the “HBOL” terminal of the Relay Box Connector. Does the DVM read the following value?	12 Volt or 24 Volt	Go to Step 4	Go to Step 3
3	1. Check the suspect circuit between the Relay connector. Fuse for the following condition. * A short to ground * An open circuit 2. Repair if necessary. Has DTC 41 been corrected?	-	Go to Step 8	Go to Step 4
4	Using the DVM, check the resistance of inter “4” “5” Relay terminal. Does the DVM read the following Value?	23Ω (for 12 Volt) 100Ω (for 24 Volt)	Go to Step 5	Go to Step 6
5	1. Ignition “OFF” 2. Disconnect the ECM connector from ECM. 3. Check the VSV circuit between the ECU and Relay connector * A short to ground * An open circuit 2. Repair if necessary. Has DTC 41 been corrected?	-	Go to Step 8	Go to Step 7
6	Replace the Relay. Is the action complete?	-	Go to Step 8	-
7	Replace the ECM. Is the action complete?	-	Go to Step 8	-
8	1. Reconnect all the connectors removed. 2. Ignition “ON”, Engine “OFF” Is DTC 41 all right under Scan Tool Check?	-	Go to Step 9	Go to Step 2
9	Is any current trouble other than DTC 41 displayed by scan tool?	-	Go to trouble code section	Trouble code clear

DTC-P42 QUICK ON START (QOS) RELAY CONTROL CIRCUIT HIGH VOLTAGE

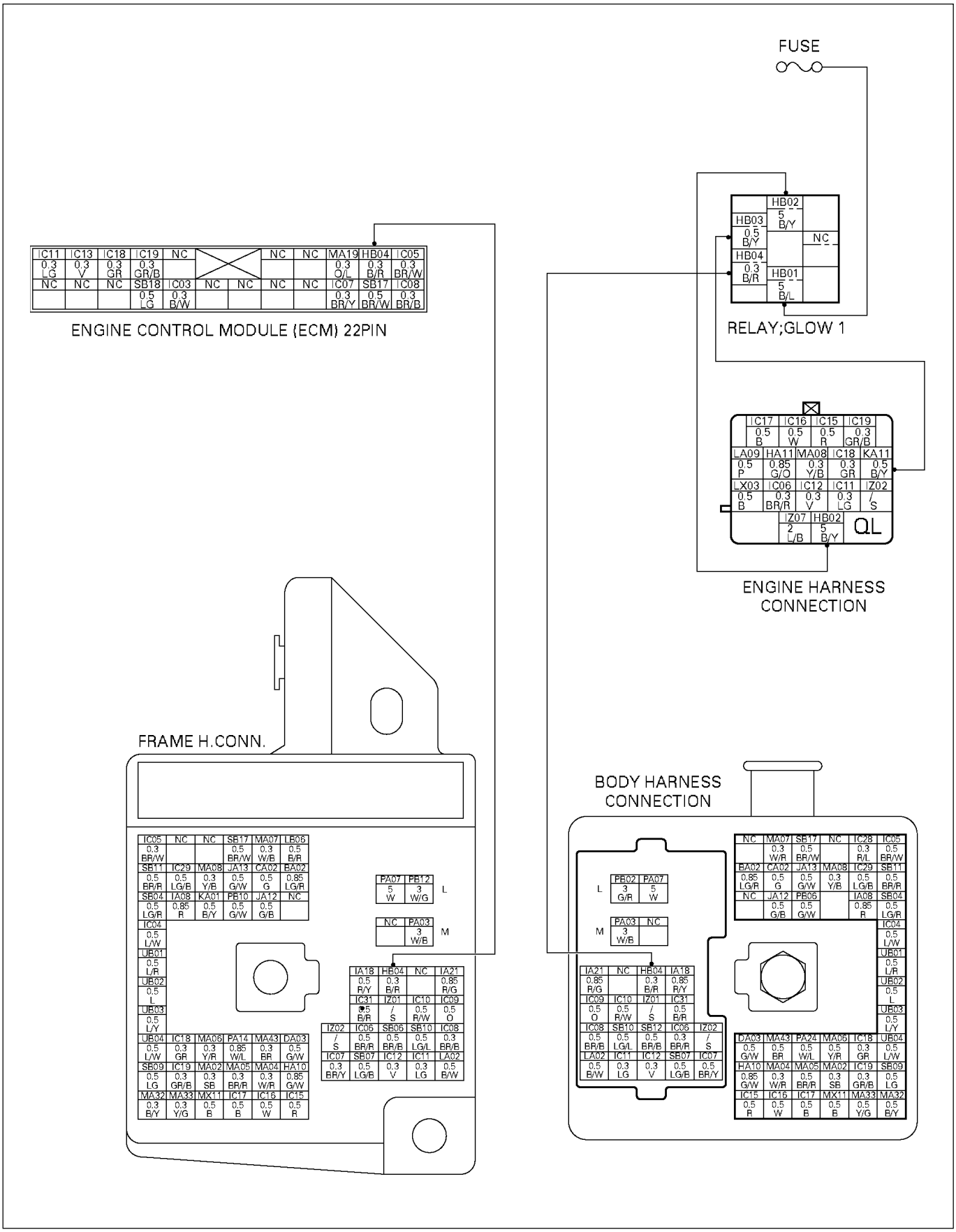

065LW040.tif

Location of relay

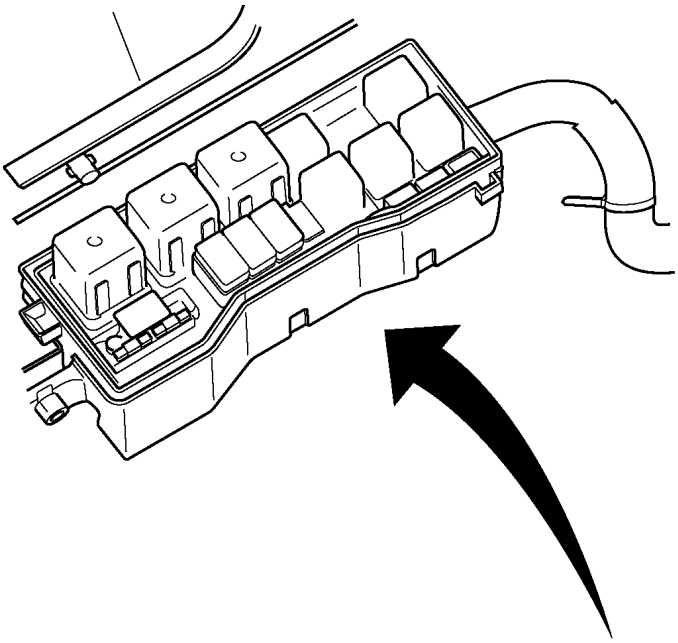

Relay box
(Installed on the left side rear of the cab)

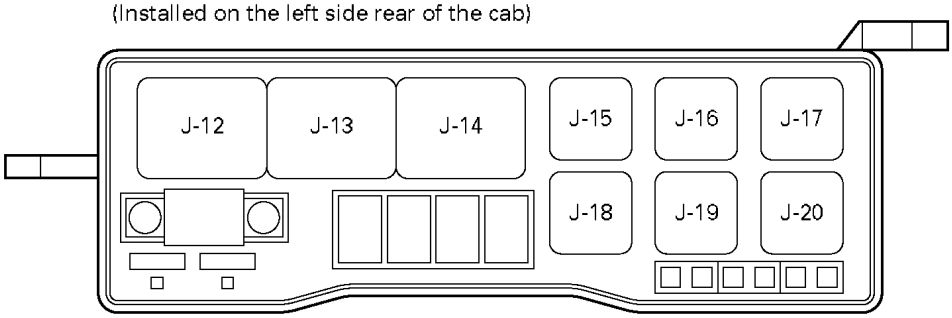

No.	RELAY NAME
J-12	STARTER
J-13	GLOW1 (QOS)
J-14	C/HEATER
J-15	ENG. WARM CUT (QWS)
J-16	———
J-17	CONDENSER FAN
J-18	EXH. BRAKE CONTROL
J-19	———
J-20	MARKER LAMP

826LW038.tif

Inspection for Quick On Start (QOS) power cut relay

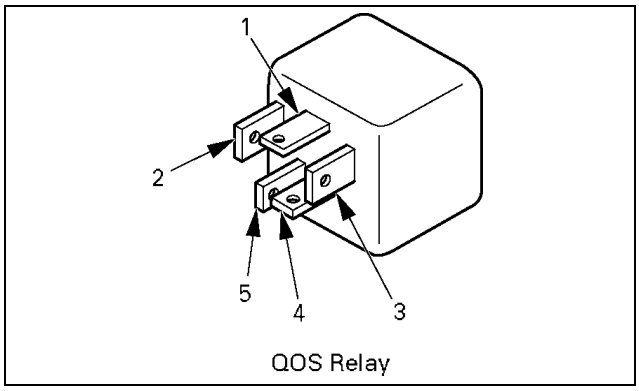

056LW021.tif

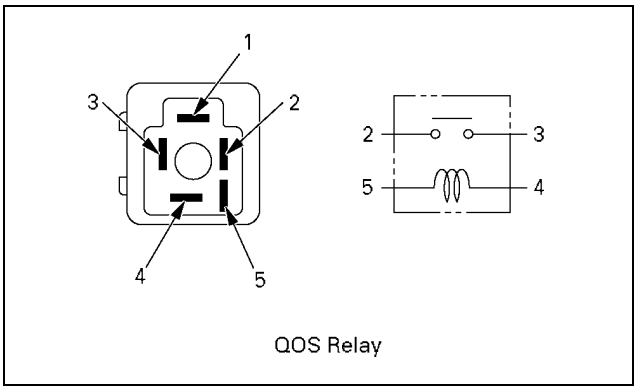

056LW020.tif

Resistance value

Inspection Point		Resistance	Reference
Inspection relay unit	4 ←→ 5	23 (Ω) (for 12 volt) 100 (Ω) (for 24 volt)	
	2 ←→ 3	∞	Not be supplied electricity to coil
		Below 0.5 (Ω)	Be supplied electricity to coil

Step	Action	Value (s)	Yes	No
1	Was the “on-board diagnostic (OBD) system check” performed?	-	Go to Step 2	Go to self diag system check
2	Using the DVM, check the resistance of the Relay Does the DVM read the following Value?	23Ω (for 12 Volt) 100Ω (for 24 Volt)	Go to Step 3	Go to Step 4
3	1. Ignition “OFF” 2. Disconnect the ECM connector from ECM. 3. Check the short to voltage of Relay circuit between the ECM and Relay connector 4. Repair if necessary. Has DTC 42 been corrected?	-	Go to Step 6	Go to Step 5
4	Replace the VSV Is the action complete?	-	Go to Step 6	-
5	Replace the ECM. Is the action complete?	-	Go to Step 6	-
6	1. Reconnect all the connectors removed. 2. Ignition “ON”, Engine “OFF” Is DTC 42 all right under Scan Tool Check?	-	Go to Step 7	Go to Step 2
7	Is any current trouble other than DTC 42 displayed by scan tool?	-	Go to trouble code section	Trouble code clear

DTC-P43 ANEROID COMPENSATOR VACUUM SWITCHING VALVE (VSV) CONTROL CIRCUIT LOW VOLTAGE

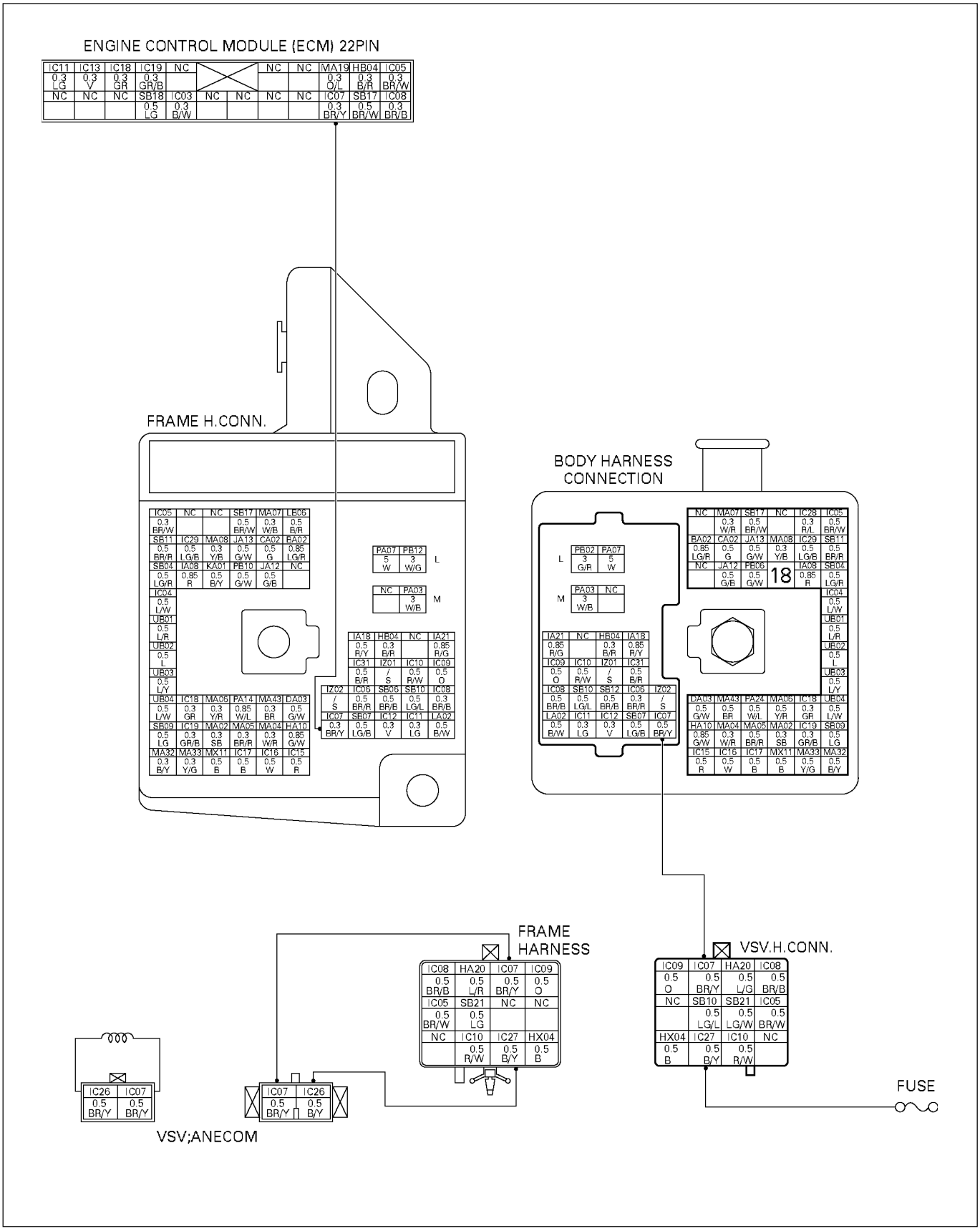

065LW033.tif

Appearance of Vacuum Switching Valve (VSV): Aneroid compensator and connector name

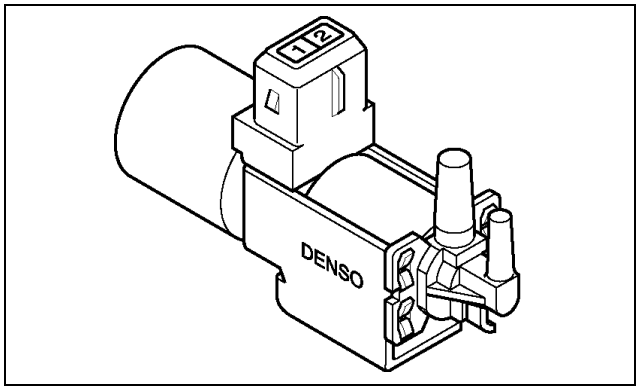

Figure. VSV:Aneroid compensator 056LW001.tif

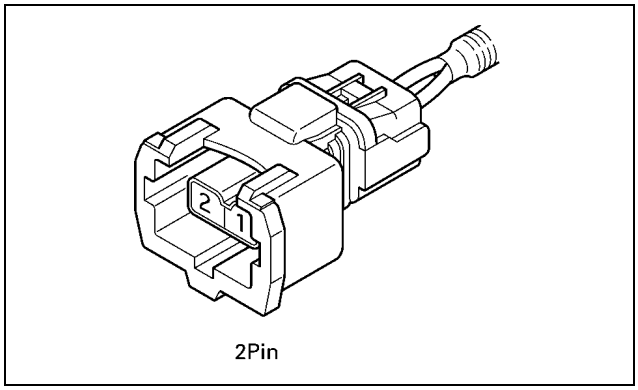

Figure. VSV:Aneroid compensator connector 056LY00003

Connector No	Signal
1 2	SIG GND

Measure resistance at VSV Aneroid compensator

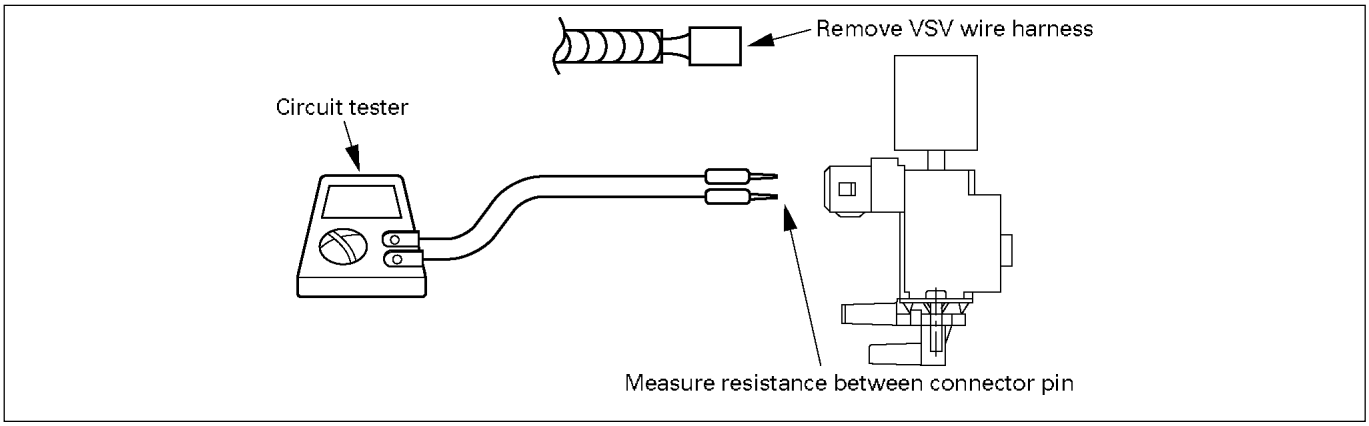

056LW005.tif

CAUTION:

When measuring resistance with a circuit tester, be careful not to damage or deform the terminals.

Resistance value

Inspection Point		Resistance Value (kΩ)	Reference
Connector	Pin No.		
2 pin Gray	2 ←→ 1	37 to 44 (for 12 volt) 159 to 169 (for 24 volt)	SIG ←→ GND
	1 ←→ Body	∞	SIG ←→ Body

Note: Resistance value is difference according to the engine temperature (condition of engine warming up)

Step	Action	Value (s)	Yes	No
1	Was the “on-board diagnostic (OBD) system check” performed?	-	Go to Step 2	Go to self diag system check
2	1. Ignition “OFF” 2. Disconnect the VSV from the wiring harness connector. 3. Ignition “ON” Engine “OFF” 4. Using the Digital Voltmeter (DVM), check for voltage on the “IC26” of the VSV harness connector. Does the DVM read the following value?	12 Volt or 24 Volt	Go to Step 4	Go to Step 3
3	1. Check the suspect circuit between the VSV connector and “Engine Ignition.” Fuse for the following condition. * A short to ground * An open circuit 2. Repair if necessary. Has DTC 43 been corrected?	-	Go to Step 8	Go to Step 4
4	Using the DVM, check the resistance of the VSV Does the DVM read the following Value?	37 ~ 44Ω (for 12 Volt) 159 ~ 169Ω (for 24 Volt)	Go to Step 5	Go to Step 6
5	1. Ignition “OFF” 2. Disconnect the ECM connector from ECM. 3. Check the VSV circuit between the ECM and VSV connector * A short to ground * An open circuit 2. Repair if necessary. Has DTC 43 been corrected?	-	Go to Step 8	Go to Step 7
6	Replace the VSV Is the action complete?	-	Go to Step 8	-
7	Replace the ECM. Is the action complete?	-	Go to Step 9	-
8	1. Reconnect all the connectors removed. 2. Ignition “ON”, Engine “OFF” Is DTC 43 all right under Scan Tool Check?	-	Go to Step 9	Go to Step 2
9	Is any current trouble other than DTC 43 displayed by scan tool?	-	Go to trouble code section	Trouble code clear

DTC-P44 ANEROID COMPENSATOR VACUUM SWITCHING VALVE (VSV) CONTROL CIRCUIT HIGH VOLTAGE

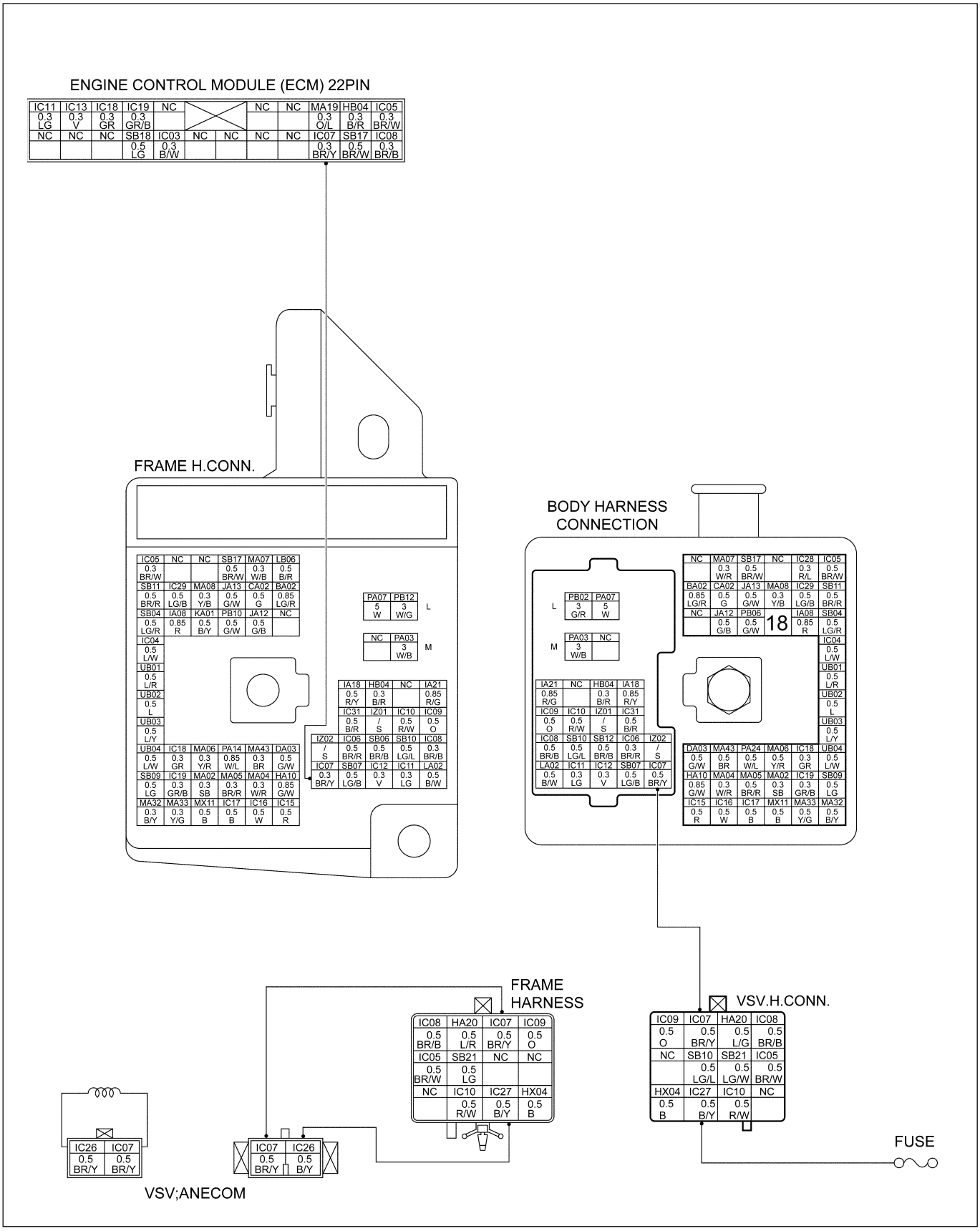

065LW033.tif

Appearance of Vacuum Switching Valve (VSV): Ameroid compensator and connector name

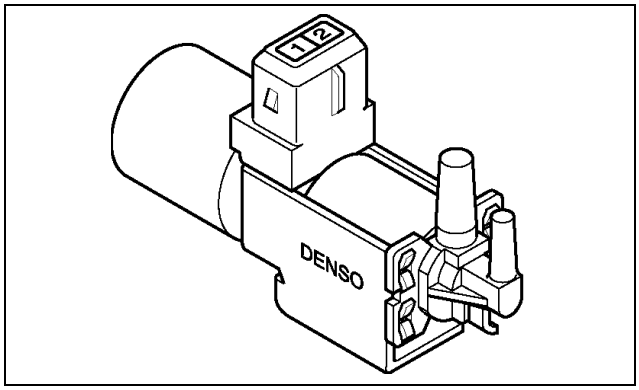

056LW001.tif

Figure. VSV:Aneroid Compensator

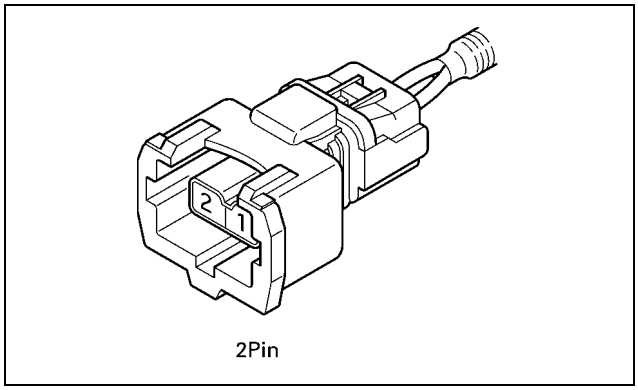

056LY00003

Figure. VSV:Aneroid compensator

Connector No	Signal
1 2	SIG GND

Measure resistance at VSV Aneroid compensator

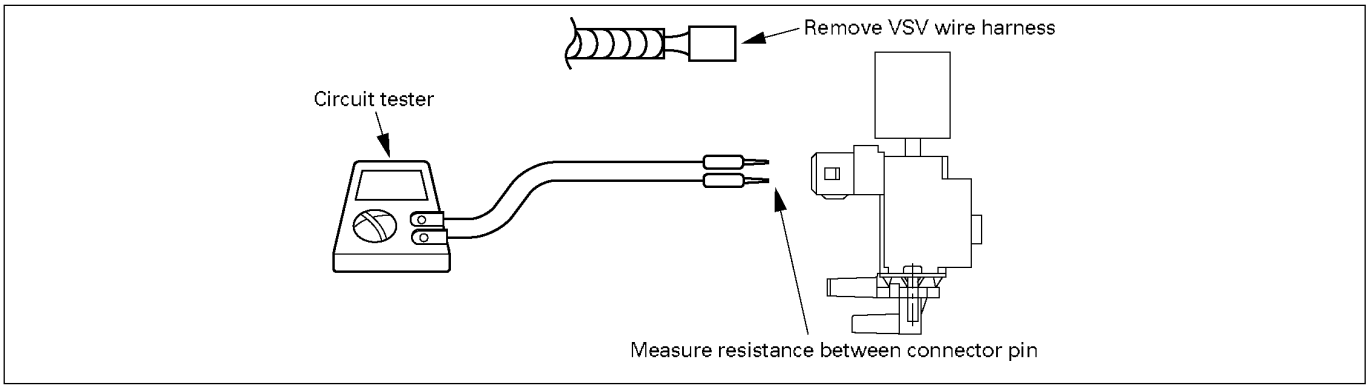

056LW005.tif

CAUTION:

When measuring resistance with a circuit tester, be careful not to damage or deform the terminals.

Resistance value

Inspection Point		Resistance Value (kΩ)	Reference
Connector	Pin No.		
3 pin Green	2 ←→ 1	37 to 44 (for 12 volt) 159 to 169 (for 24 volt)	SIG ←→ GND
	1 ←→ Body	∞	SIG ←→ Body

Note: Resistance value is difference according to the engine temperature (condition of engine warming up)

Step	Action	Value (s)	Yes	No
1	Using the DVM, check the resistance of the VSV Does the DVM read the following Value?	37 ~ 44Ω (for 12 Volt) 159 ~ 169Ω (for 24 Volt)	Go to Step 4	Go to Step 3
2	1. Ignition “OFF” 2. Disconnect the ECM connector from ECM. 3. Check the short to voltage of VSV circuit between the ECM and VSV connector 4. Repair if necessary. 5. Clear trouble code by Scan Tool. 6. Ignition “ON” Engine “ON”. 7. Does the MIL blink?	-	Go to Step 6	Go to Step 5
3	Replace the VSV Is the action complete?	-	Go to Step 6	-
4	Replace the ECM. Is the action complete?	-	Go to Step 6	-
5	1. Reconnect all the connectors removed. 2. Ignition “ON”, Engine “OFF”. Clear trouble code by Scan Tool. 3. Ignition “ON” Engine “ON”. 4. Does the MIL blink?	-	Go to Step 7	Go to Step 2
6	Connect Scan Tool. Is any current trouble other than DTC 44 displayed by scan tool?	-	Go to trouble code section	Trouble code clear

DTC-P45 ENGINE SPEED SENSOR CIRCUIT LOW VOLTAGE

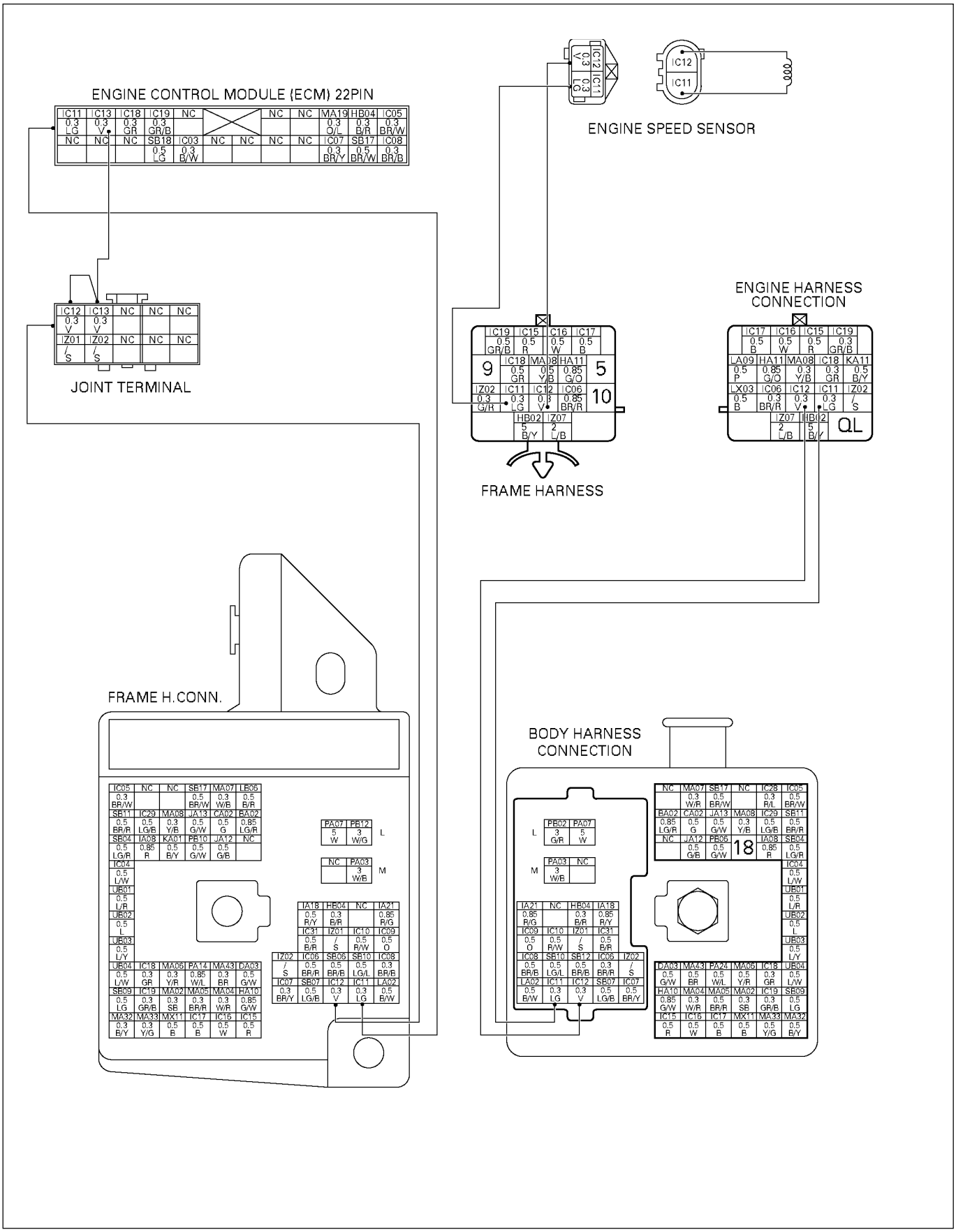

065LW042.tif

Appearance of Engine Speed sensor and connector name

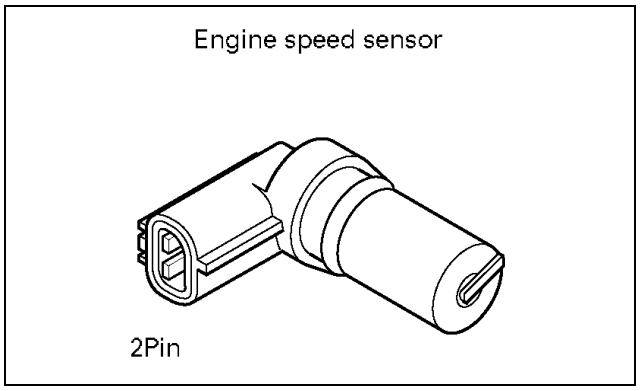

056LW014.tif

Figure. Engine Speed sensor

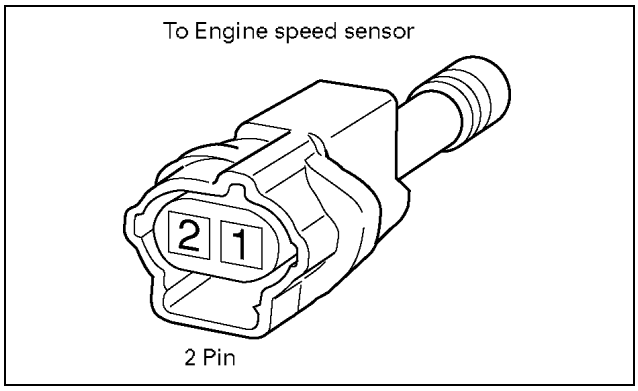

056LW008.tif

Figure. Engine Speed sensor connector

Connector No	Signal
1 2	GND SIG

Measure resistance at Engine Speed sensor

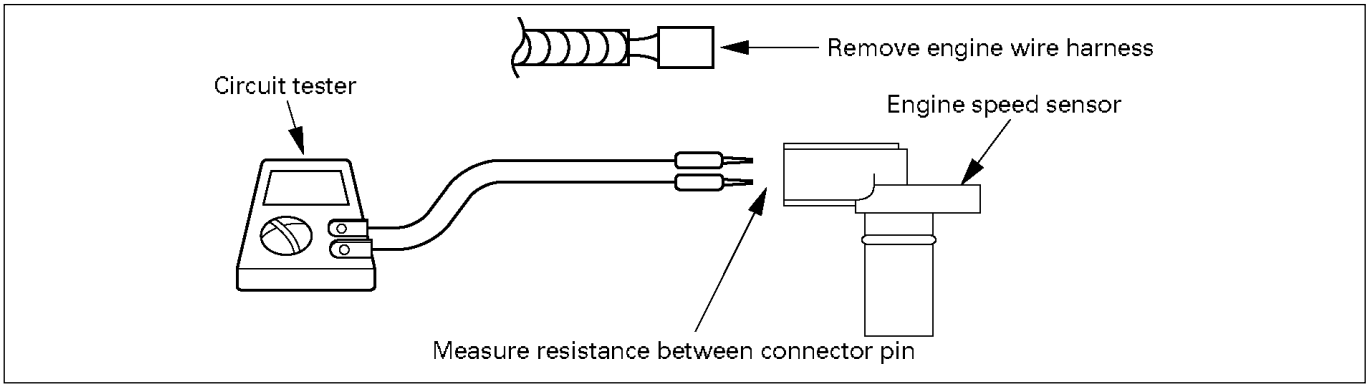

056LW022.tif

CAUTION:

When measuring resistance with a circuit tester, be careful not to damage or deform the terminals.

Resistance value

Inspection Point		Resistance Value (kΩ)	Reference
Connector	Pin No.		
2 pin Black	2 ←→ 1 2 ←→ Body	840±20% ∞	SIG ←→ GND SIG ←→ Body

Note: Resistance value is difference according to the engine temperature (condition of engine warming up)

Location of fuse

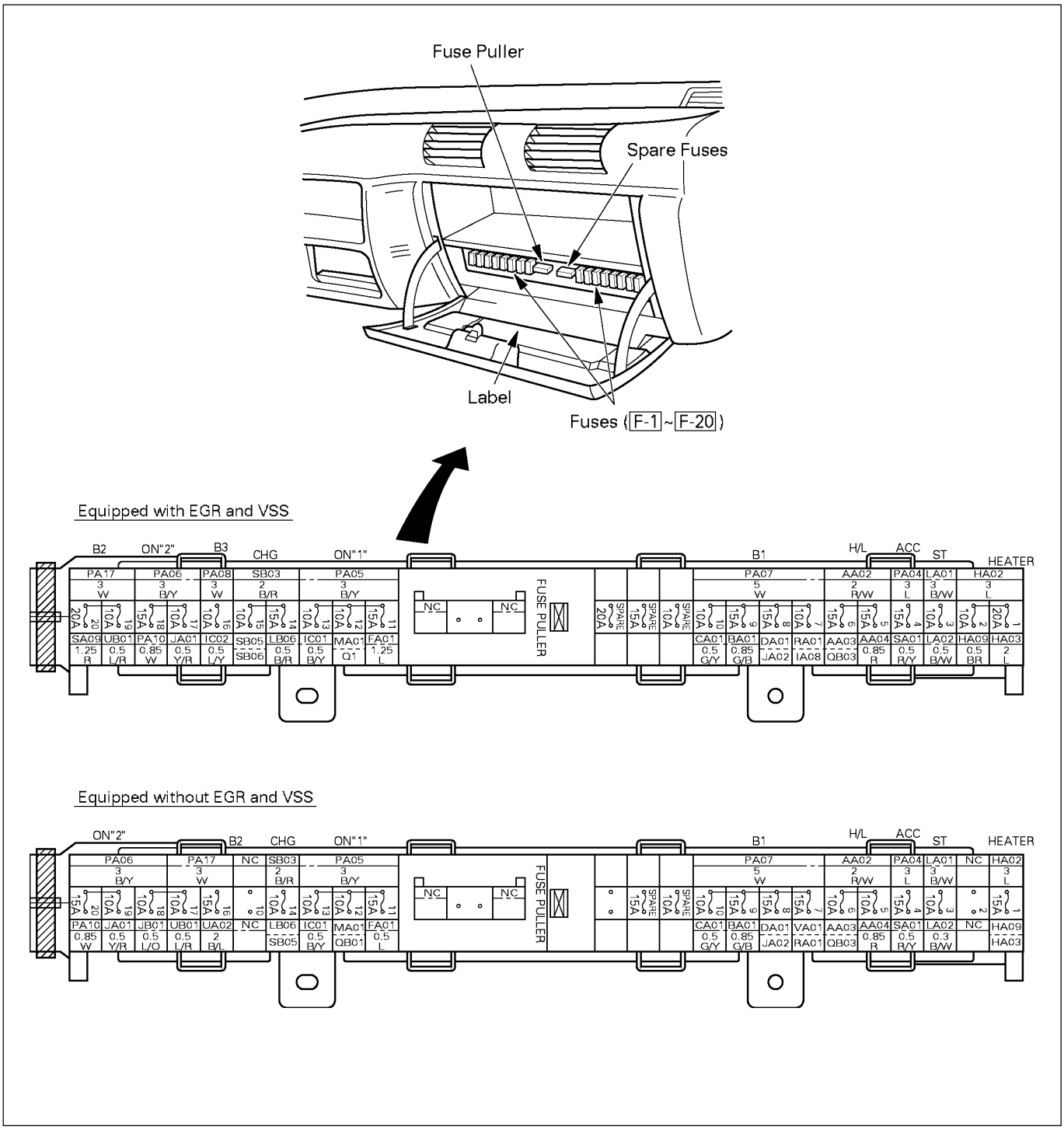

056LW030.tif

Step	Action	Value (s)	Yes	No
1	1. Ignition “ON”, Engine “OFF” 2. Connect a voltmeter to the ECM connector terminals (ENGINE+) and (ENGINE-) Is the voltage 0V?	-	Go to Step 3	Go to Step 5
2	1. Ignition “ON”, Engine “ON” 2. Connect a voltmeter to the ECM connector terminals (ENGINE+) and (ENGINE-). Is the voltage under the range of 0-1V (AC intermittently) when the engine speed is about 2000RPM? Does the Voltage increase as the engine speed is increased?	-	Go to Step 4	Go to Step 6
3	Check for poor sensor ground or sensor signal circuit terminal connection and terminal shorted at the ECM and replace terminal(s) if necessary. Did any of the terminals need to be replaced?	-	Go to Step 9	Go to Step 8
4	1. Check sensor signal circuit for disconnection and power source for short. 2. Check sensor GND circuit for disconnection and power source for short. Repair if necessary was repair needed?	-	Go to Step 9	Go to Step 8
5	1. Check signal circuit for GND short. 2. Repair if necessary. Was repair needed?	-	Go to Step 9	Go to Step 7
6	Replaced sensor. Was sensor replaced?	-	Go to Step 9	-
7	Replace the ECM. Is the action complete?	-	Go to Step 9	-
8	1. Reconnect all the connectors removed. 2. Ignition “ON”, Engine “OFF” 3. Connect the Scan Tool. 4. Ignition “ON” Engine “OFF” 5. Make Scan Tool indicate engine speed. Is a speed range of 700 rpm to 900 rpm indicated with the engine idling (accel. off)? And as engine speed rises with accel. on, does the indicated value rise?	-	Go to Step 9	Go to Step 2
9	Is any current trouble other than DTC 45 displayed by scan tool?	-	Go to trouble code section	Trouble code clear

DTC-P52 ELECTRONICALLY ERASABLE PROGRAMMABLE READ ONLY MEMORY (EEPROM) ERROR

Step	Action	Value (s)	Yes	No
1	Was the “on-board diagnostic (OBD) system check” performed?	-	Go to Step 2	Go to self diag system check
2	Replace the ECM Is the action complete?	-	Go to Step 3	-
3	1. Reconnect all the connectors removed. 2. Ignition “ON”, Engine “OFF” Is DTC 52 all right under Scan Tool Check?	-	Go to Step 4	Go to Step 2
4	Is any current trouble other than DTC 52 displayed by scan tool?	-	Go to trouble code section	Trouble code clear

DTC-P61 BAROMETRIC PRESSURE SENSOR CIRCUIT ERROR

Step	Action	Value (s)	Yes	No
1	Was the “on-board diagnostic (OBD) system check” performed?	-	Go to Step 2	Go to self diag system check
2	Replace the ECM Is the action complete?	-	Go to Step 3	-
3	1. Reconnect all the connectors removed. 2. Ignition “ON”, Engine “OFF” Is DTC 61 all right under Scan Tool Check?	-	Go to Step 4	Go to Step 2
4	Is any current trouble other than DTC 61 displayed by scan tool?	-	Go to trouble code section	Trouble code clear

WITHOUT DIAGNOSIS TROUBLE CODE

INTRODUCTION

If there occurs a malfunction although no Diagnostic Trouble Code (DTC) is generated, then inspect and repair the system in accordance with the flowcharts given on the following pages.

When a Diagnostic Trouble Code (DTC) is produced, inspect and repair system with reference to “EMISSION AND ELECTRICAL DIAGNOSIS”

ENGINE HUNTING

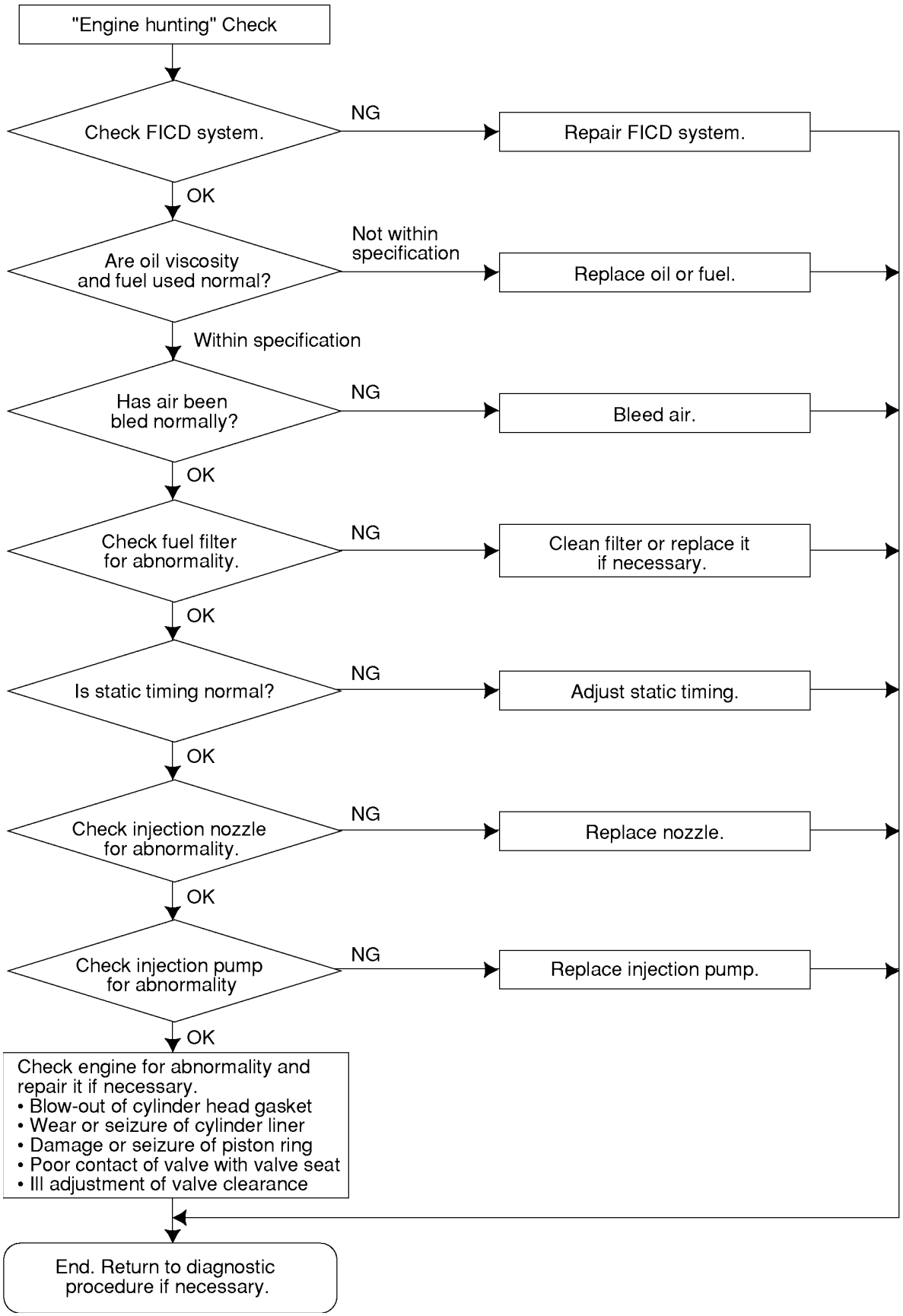

flow02Engine.tif

STARTUP FAILURE

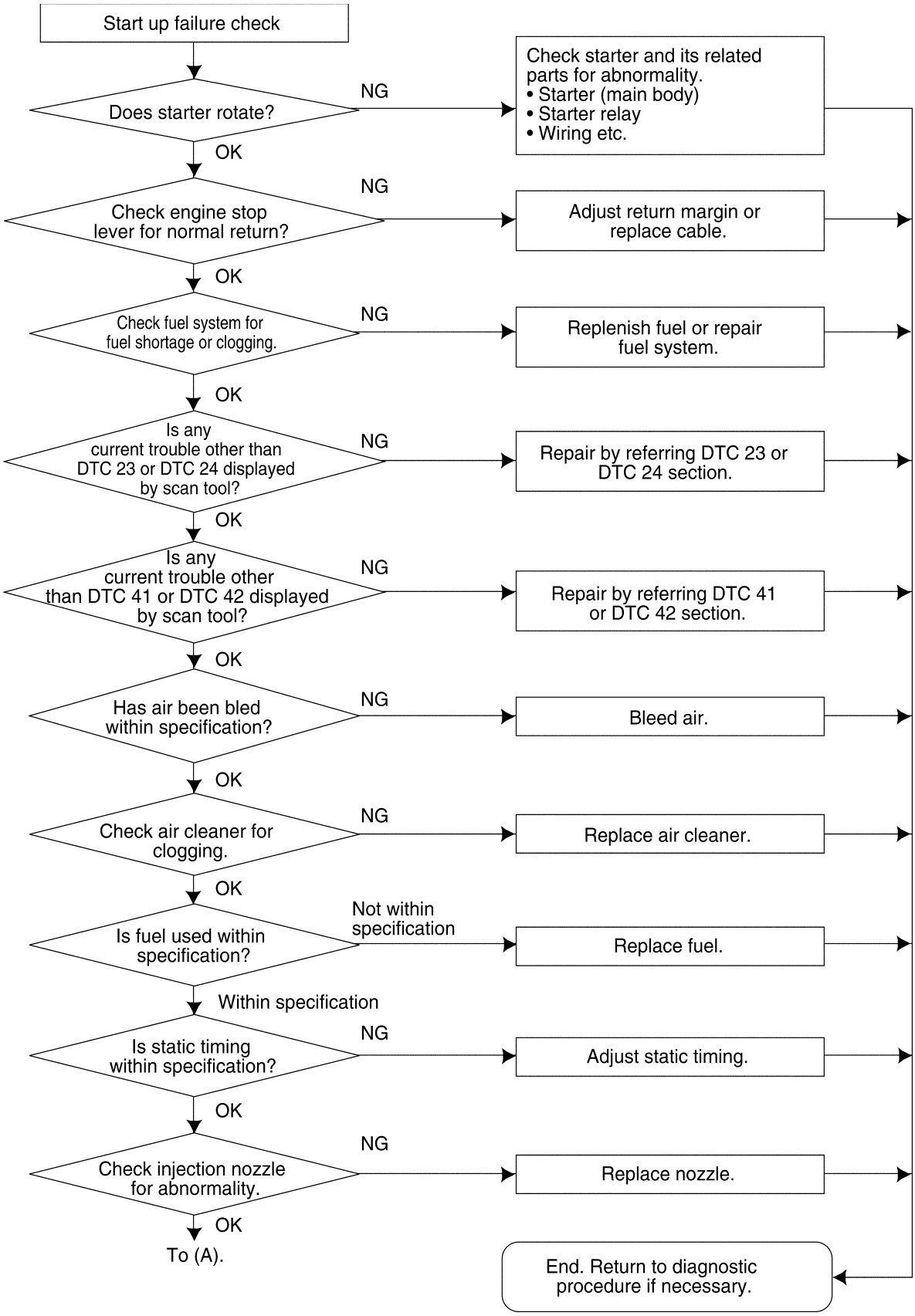

Flow03AStartup.tif

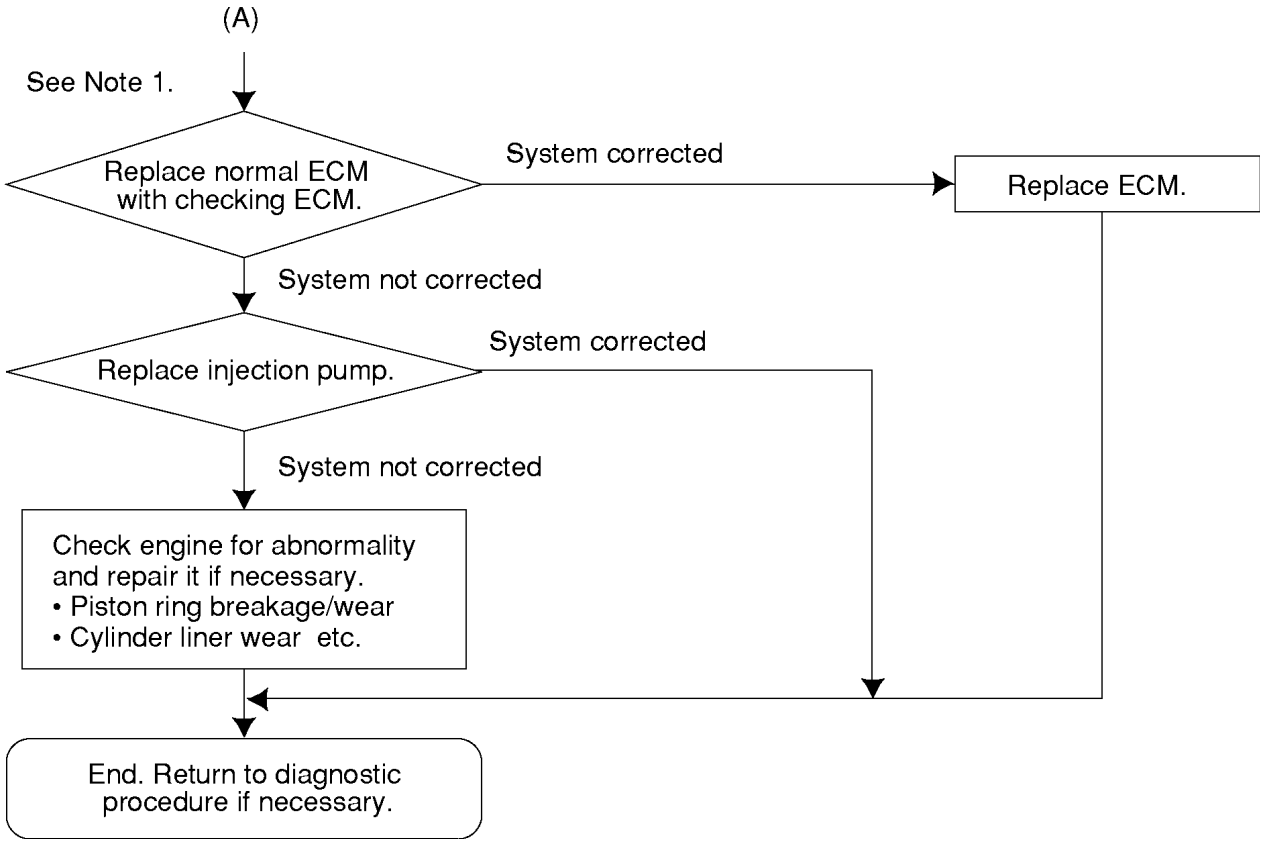

Floe03BStartup.tif

NOTE 1:

The condition of the system in which the malfunction has occurred should be checked by making comparisons between the vehicle Engine Control Module (ECM) and the checking ECM.

WHITE SMOKE (EXCESSIVE)

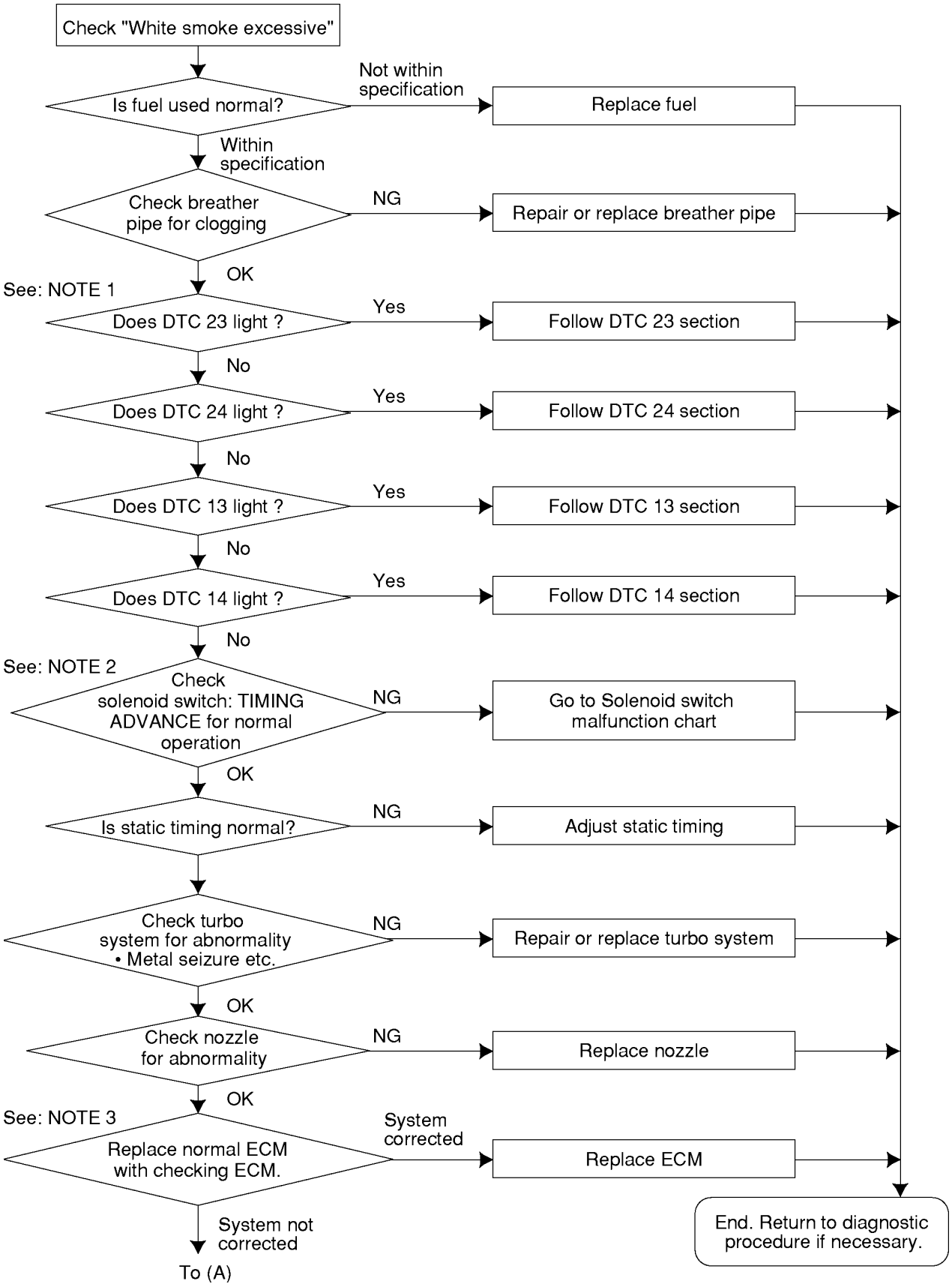

Flows10Whitesmoke.tif

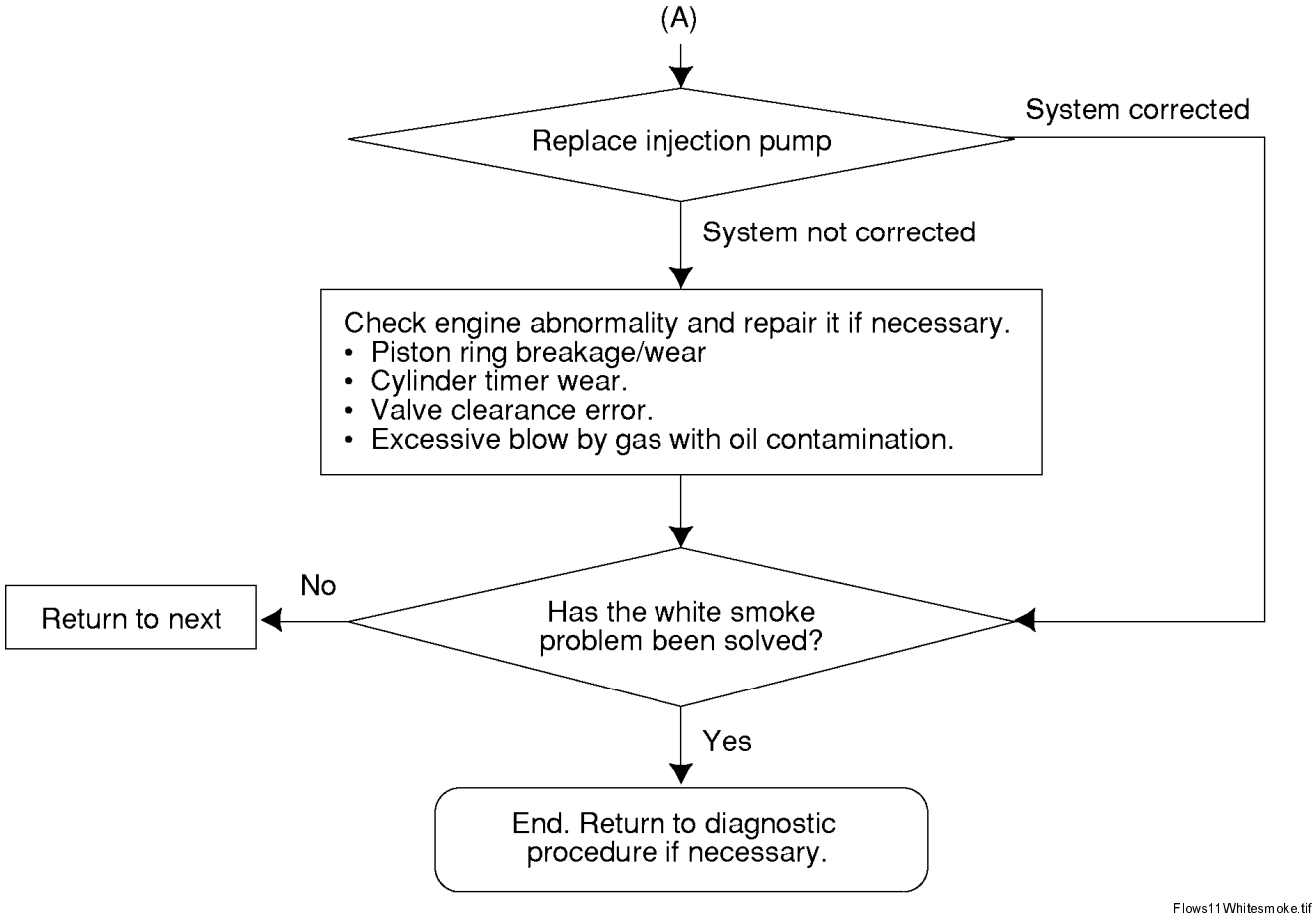

NOTE 1:

"Follow (DTC-13, 14, 23, 24)" means to refer "Workshop Manual EMISSION AND ELECTRICAL DIAGNOSIS 4HE1 6E Section of Diagnosis Trouble Code (DTC-13, 14, 23, 24)" for other DTC code, follow concerned DTC sections.

NOTE 2:

Turn the ignition key from the "OFF" position to the "ON" position to put on the solenoid switch attached to the injection pump. After the solenoid switch being on for 18 consecutive seconds, check from the outside of the vehicle if the release sound of the solenoid switch is heard.

NOTE 3:

The condition of the system in which the malfunction has occurred should be checked by making comparisons between the vehicle Engine Control Module (ECM) and the checking ECM.

BLACK SMOKE (EXCESSIVE)

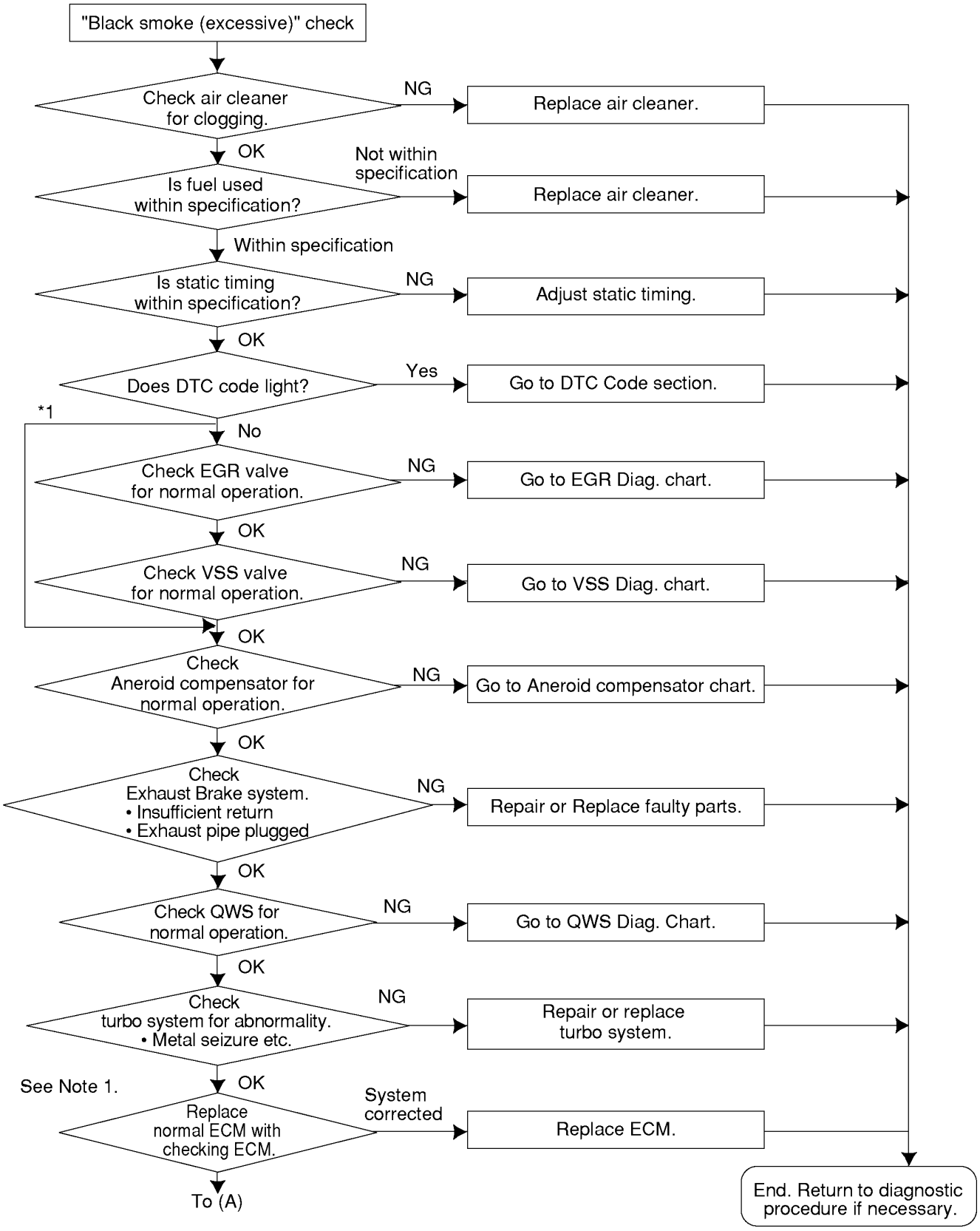

Flow04ABlack.tif

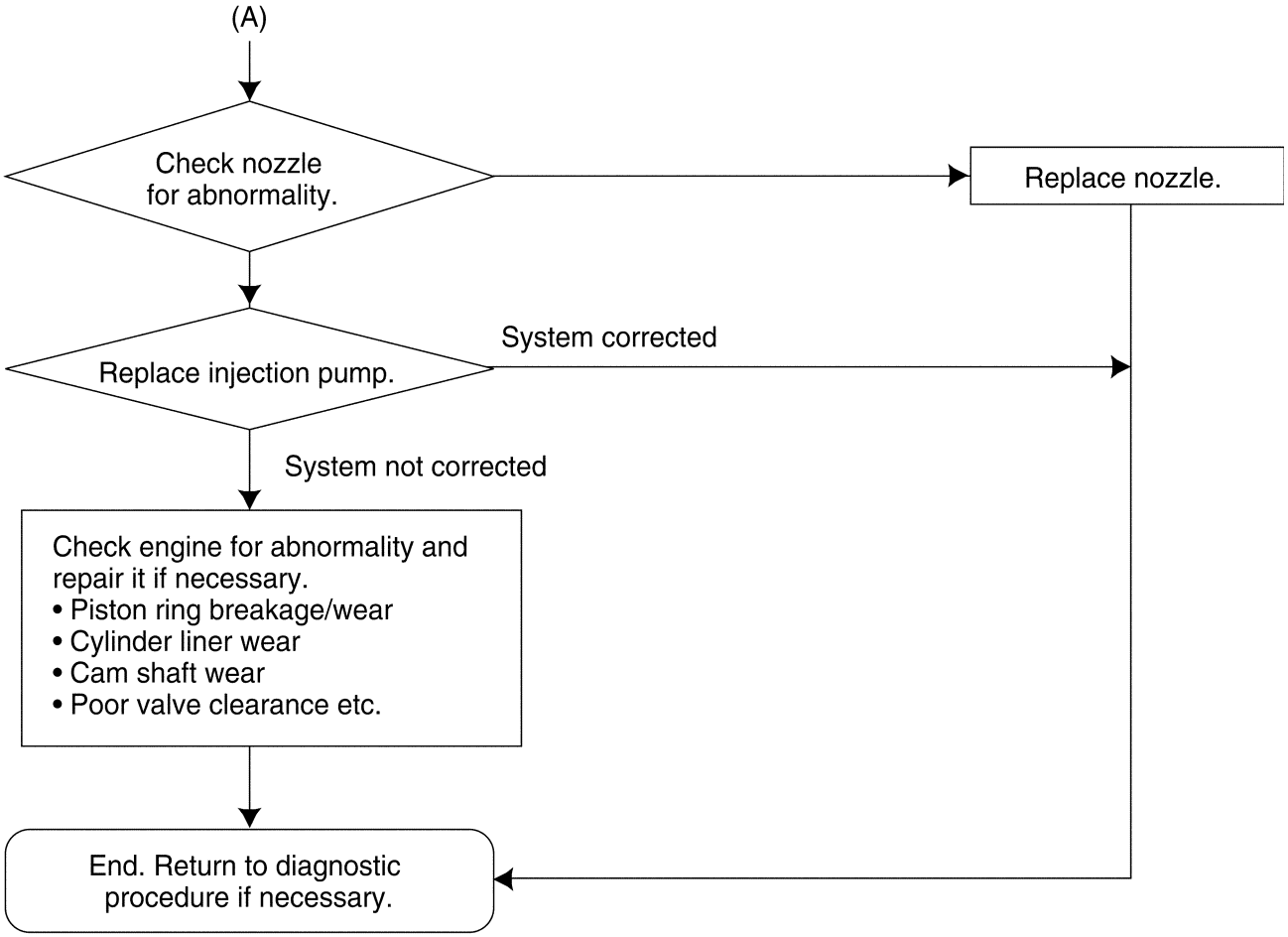

Flow04BBlack.tif

NOTE 1:

The condition of the system in which the malfunction has occurred should be checked by making comparisons between the vehicle Engine Control Module (ECM) and the checking ECM.

NOTE 2:

Refer to a trouble code for a supplier's check, if available.

***1. Equipped without Exhaust Gas Recirculation (EGR) and Variable Swirl System (VSS).**

LACK OF POWER

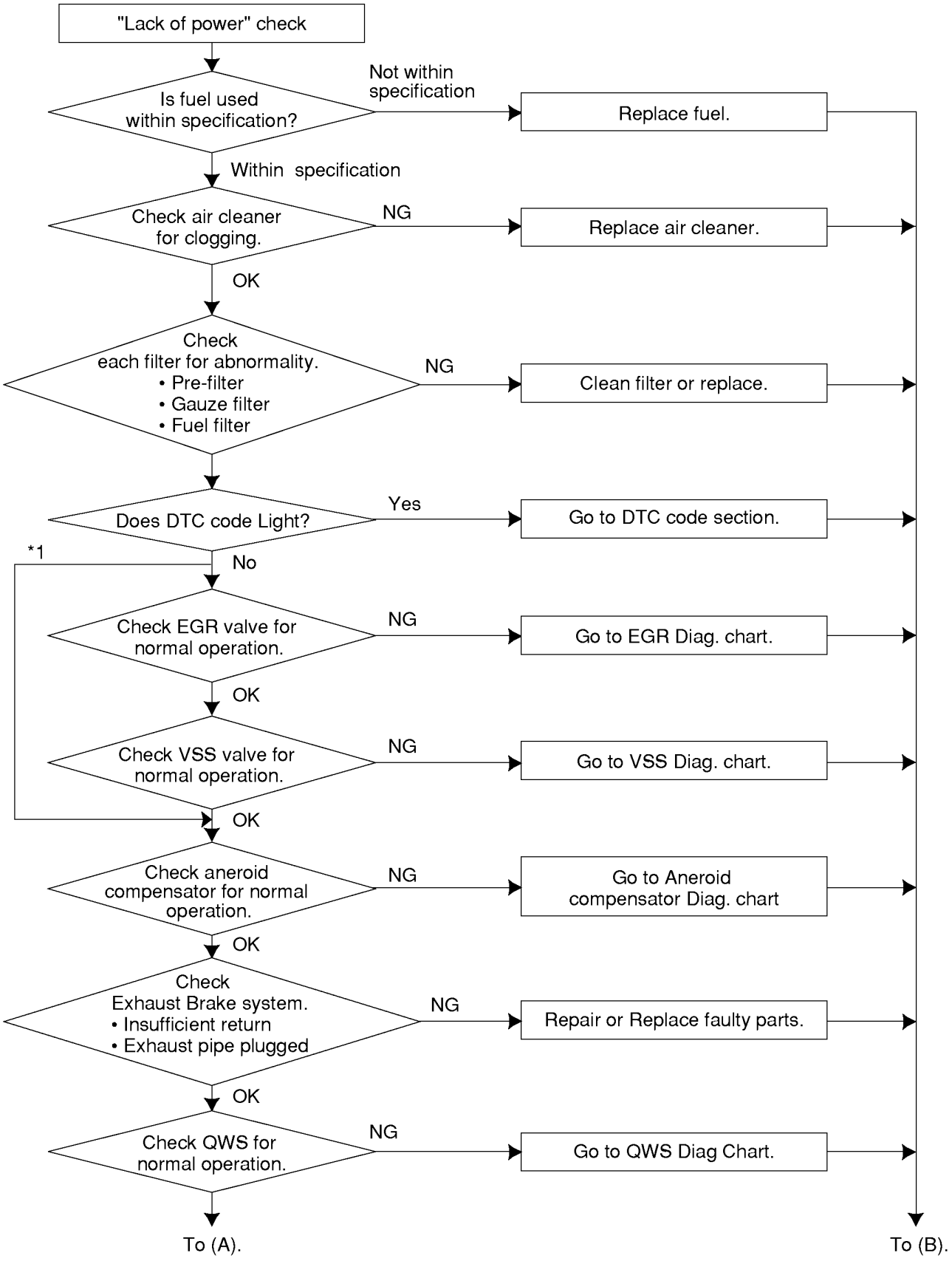

Flow05ALackof.tif

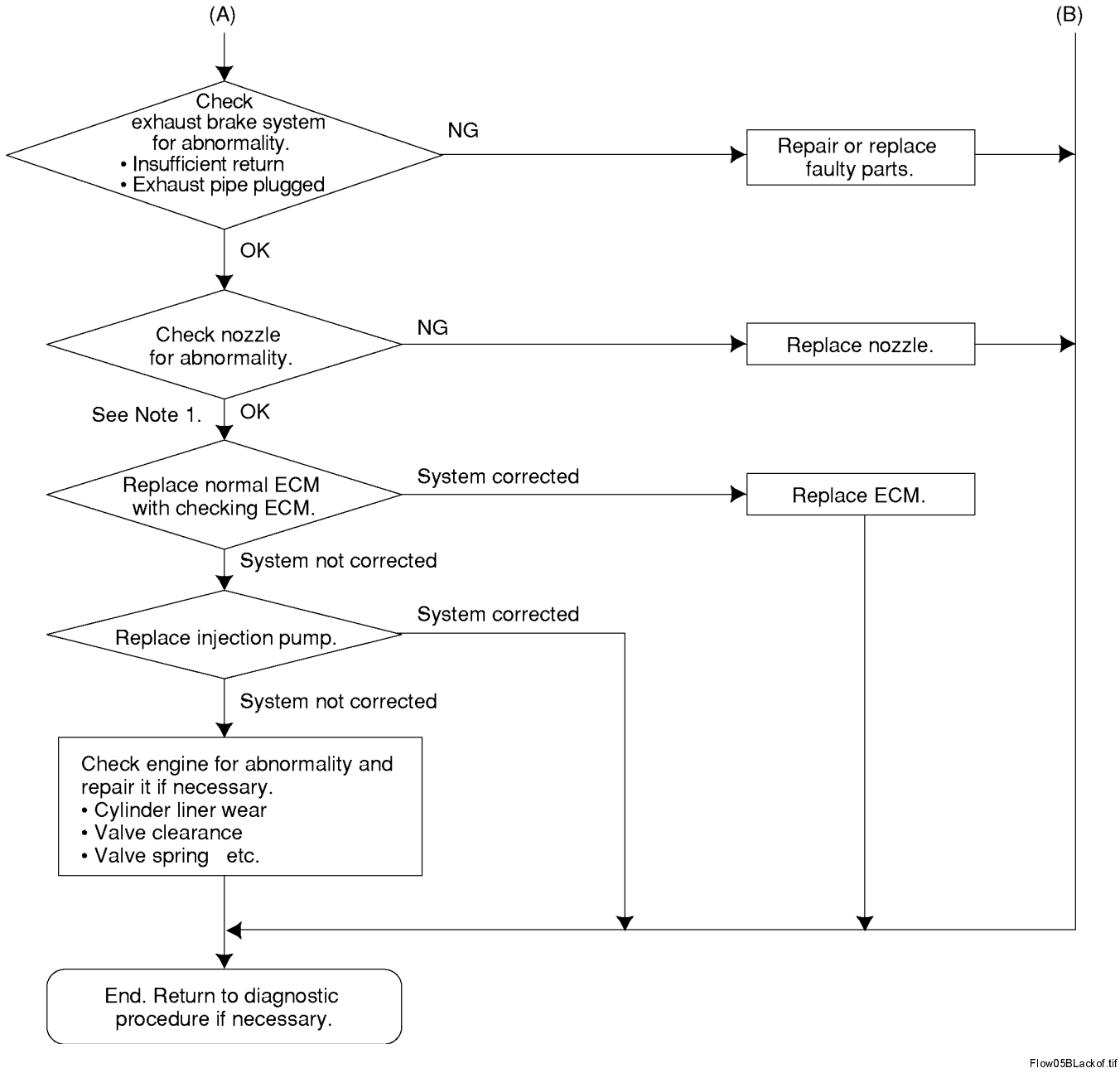

Flow05BLackof.tif

NOTE 1:

The condition of the system in which the malfunction has occurred should be checked by making comparisons between the vehicle Engine Control Module (ECM) and the checking ECM.

***1. Equipped without Exhaust Gas Recirculation (EGR) and Variable Swirl System (VSS).**

HIGH IDLE ENGINE SPEED

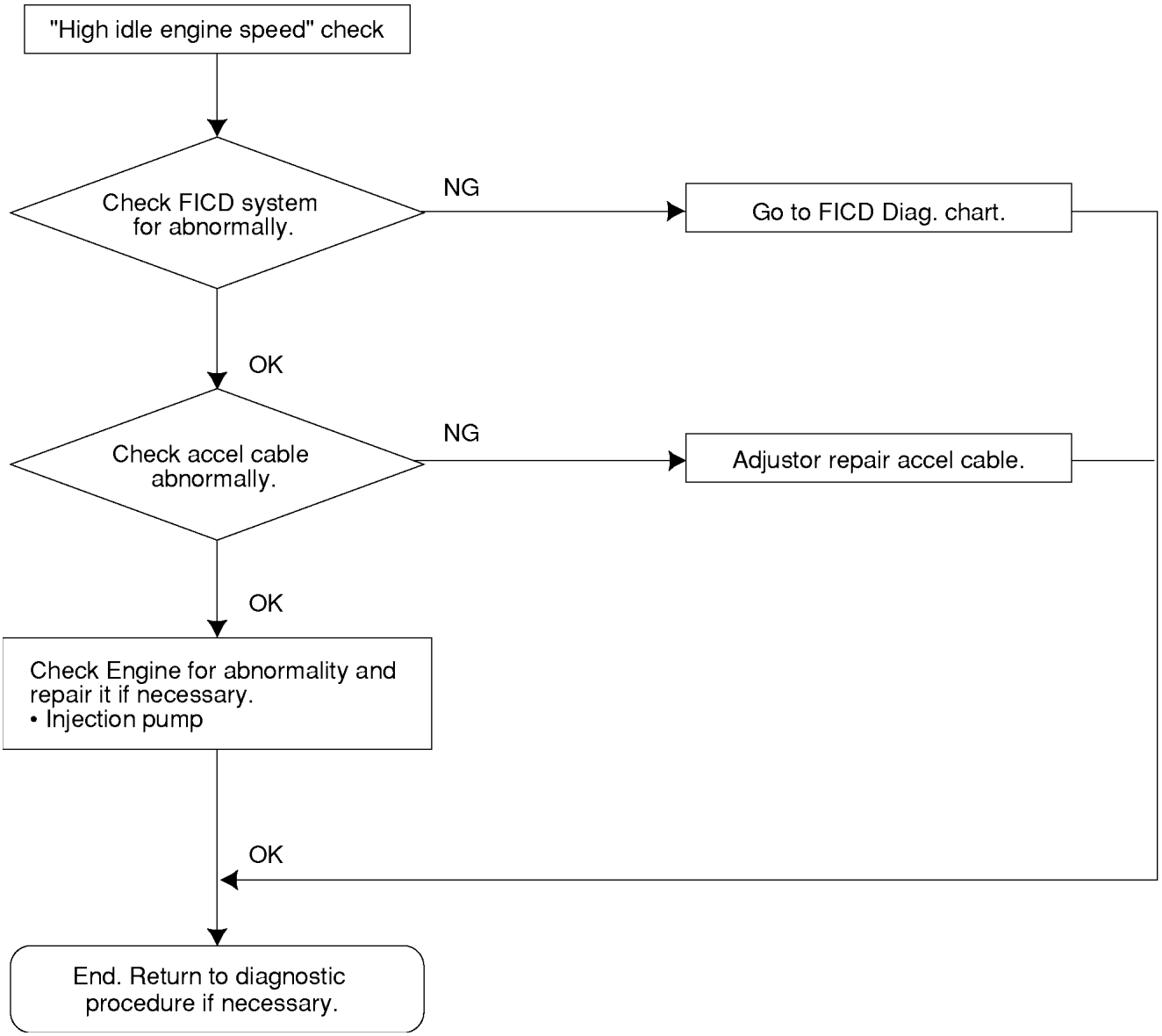

Flow10Highidle.tif

SOLENOID SWITCH MALFUNCTION

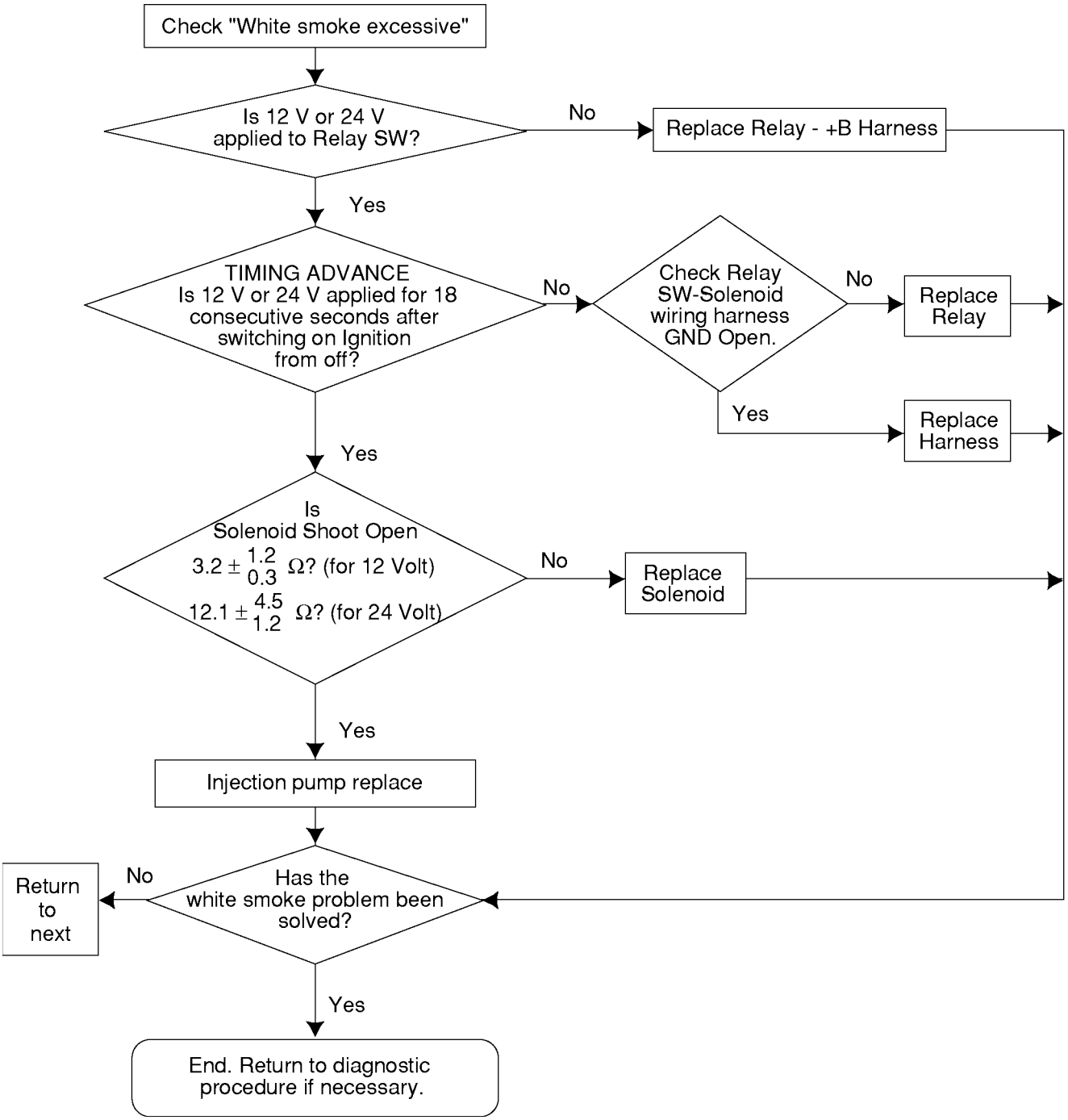

Flows12Solenoid.tif

INSPECTION

Solenoid Switch

Disconnect the connector on the solenoid switch.

Apply 12 volts or 24 volts DC to the solenoid switch and hear the touching noise between solenoid switch and advance lever in the injection pump.

If can not hear the touching noise, do not remove the solenoids switch and contact injection pump service shop to repair it.

EXHAUST BRAKE MALFUNCTION

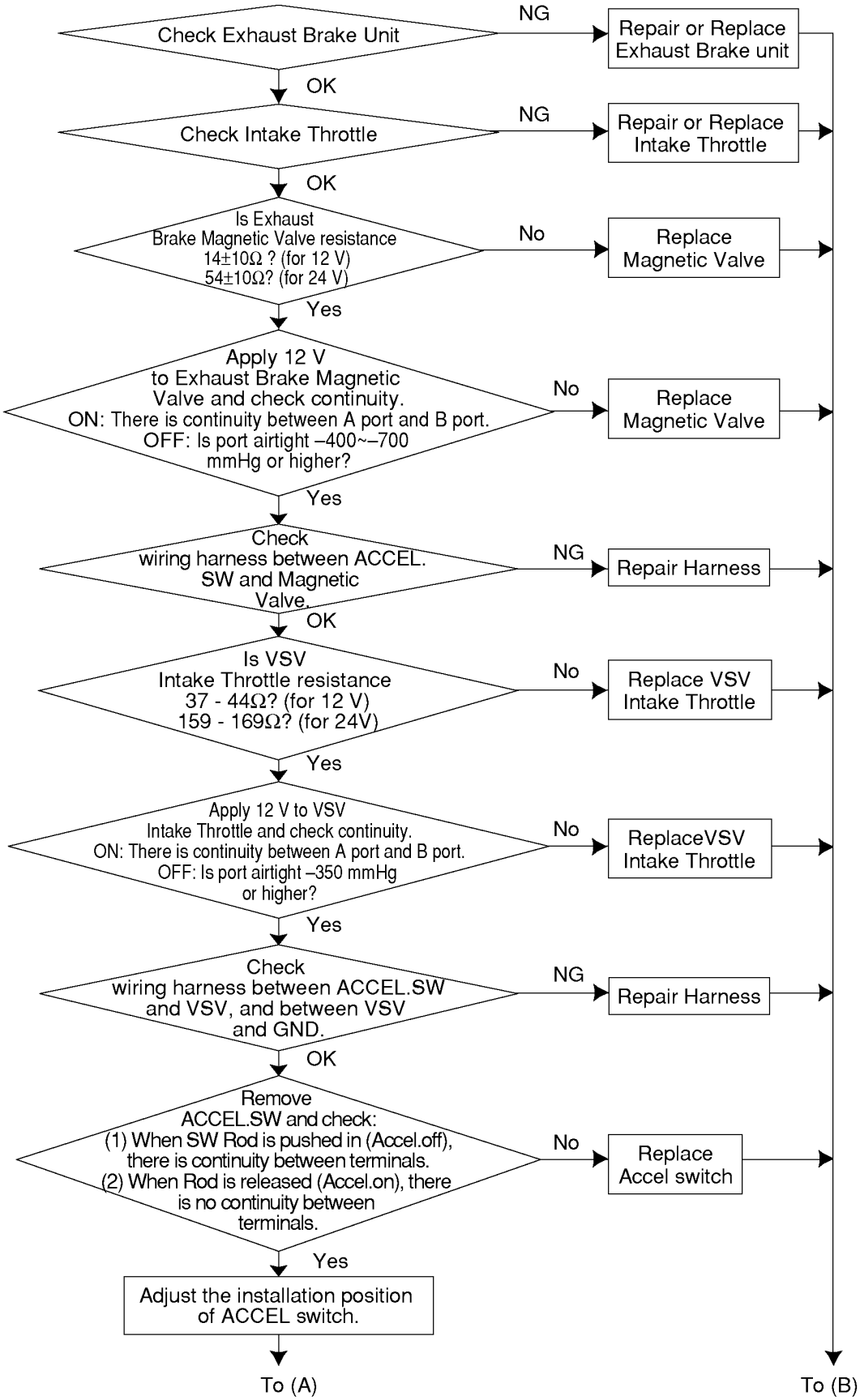

Flows07ExhaustBk.tif

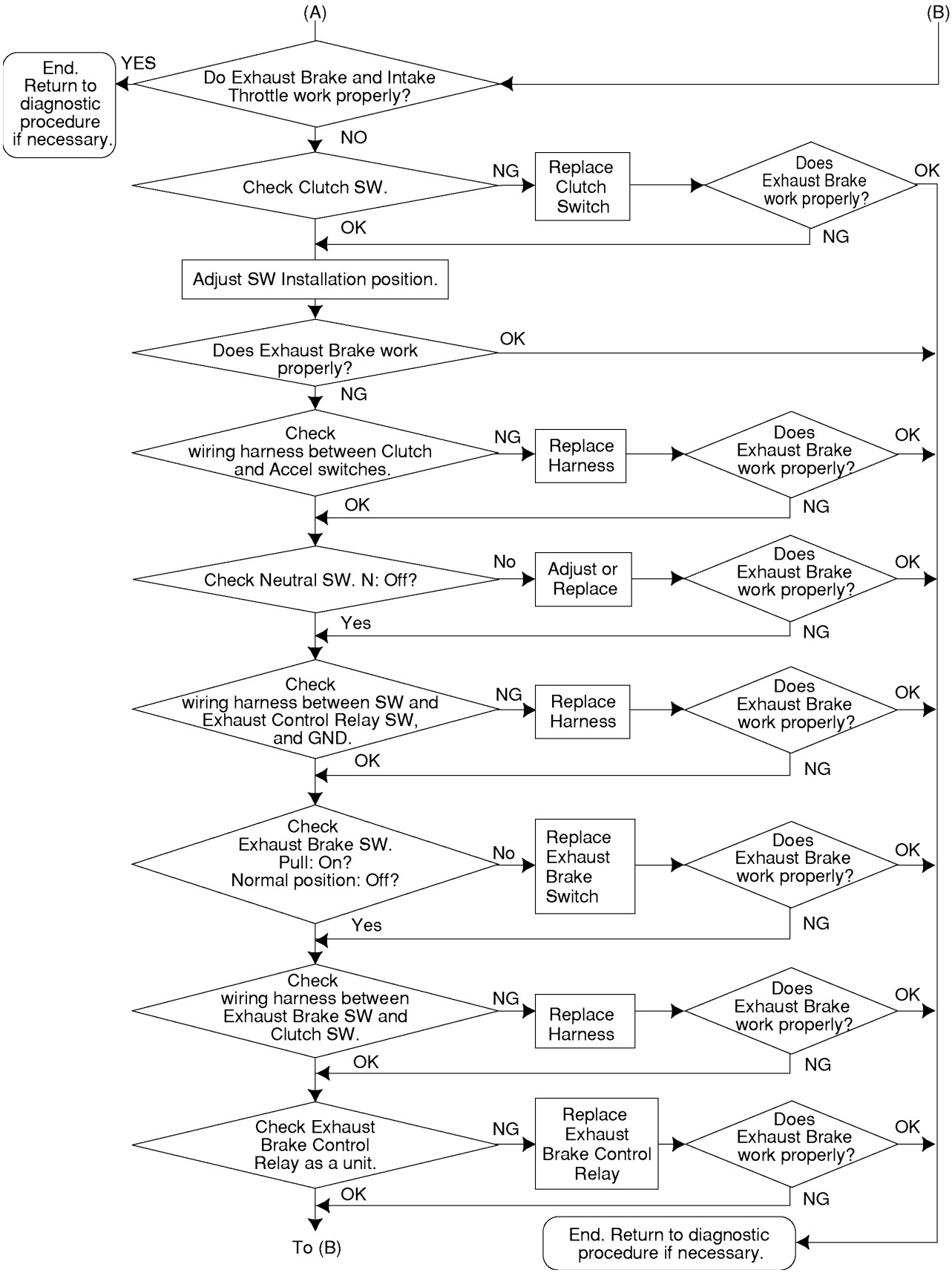

Flows08QWSsysCheck.tif

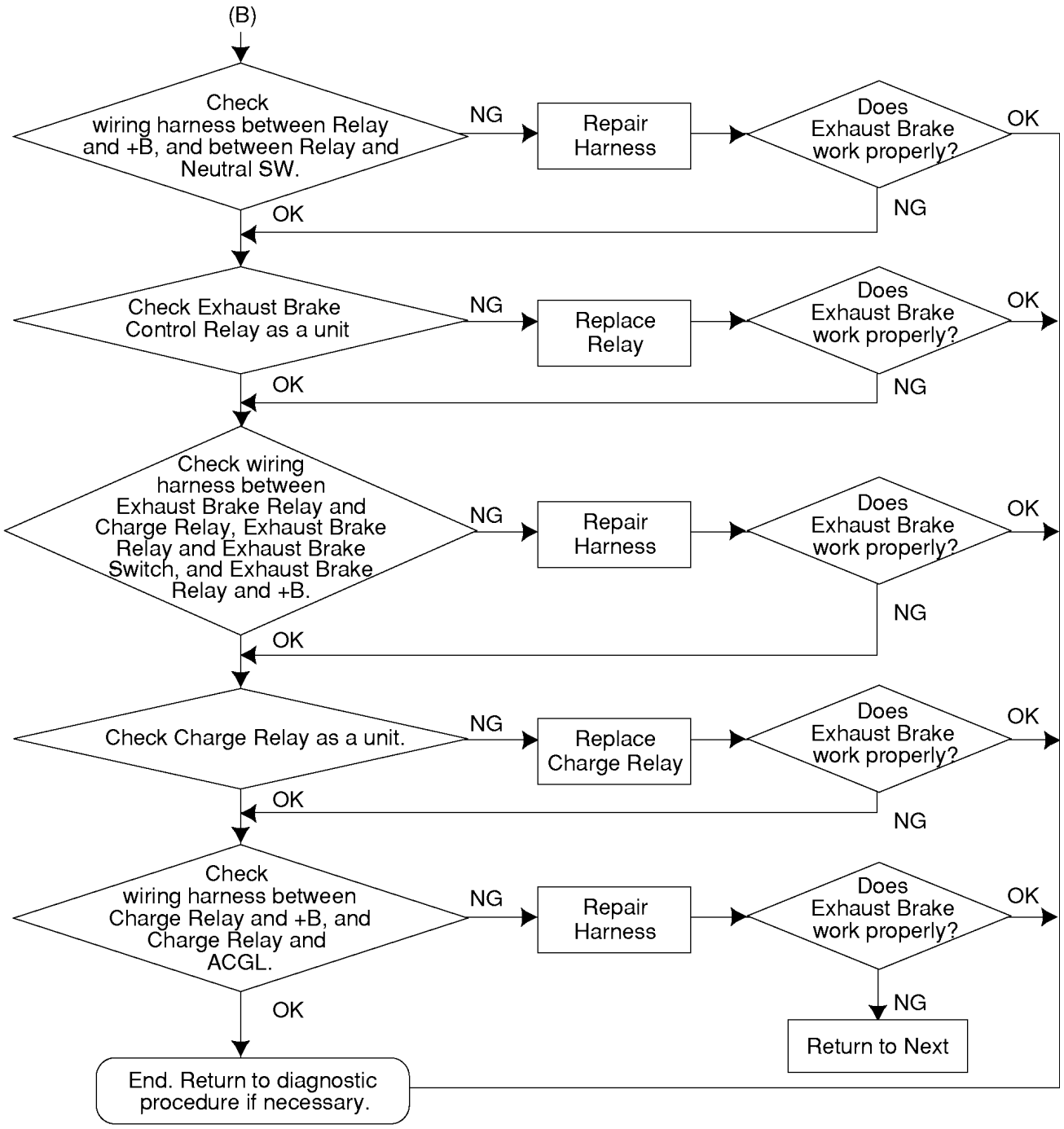

* Repair of wiring harness includes diode check.

Flows09QWSsysCheck.tif

INSPECTION

1. Exhaust Brake Magnetic Valve

Inspection

Connect the magnetic valve connector terminal No.1 and No.2 to (+) terminal and (-) terminal of battery, respectively, and check the continuity between the ports.

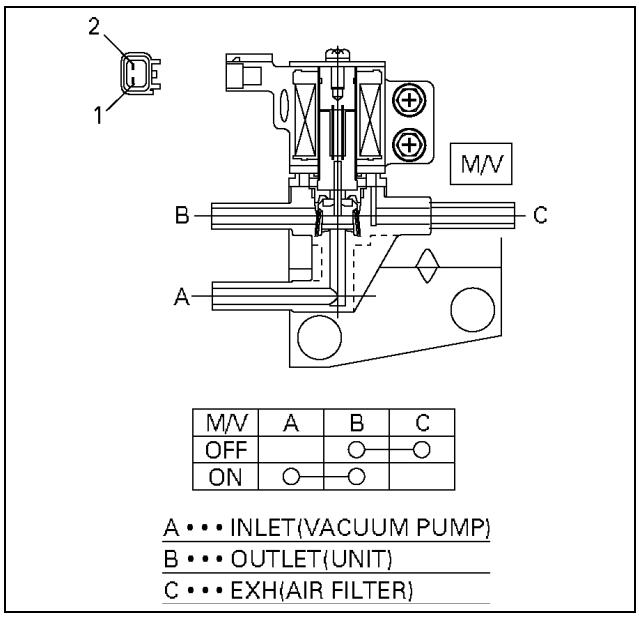

056LW010.tif

CAUTION: When measuring resistance with a circuit tester, be careful not to damage or deform the terminals.

2. Exhaust Throttle Valve

Working

Actuate the exhaust brake with the engine idling and make sure that you hear the valve strike on the stopper.

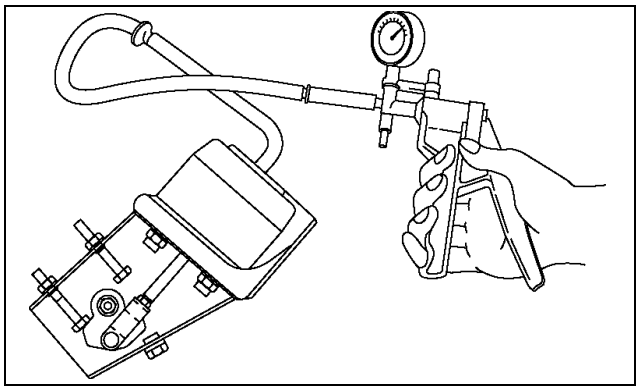

157LW002.tif

Unit

Apply a negative pressure of 53.3 kPa - 93.3 kPa {400 mmHg - 700 mmHg} to the power chamber by means of a vacuum pump and make sure of the smooth opening/closing of the exhaust brake valve.

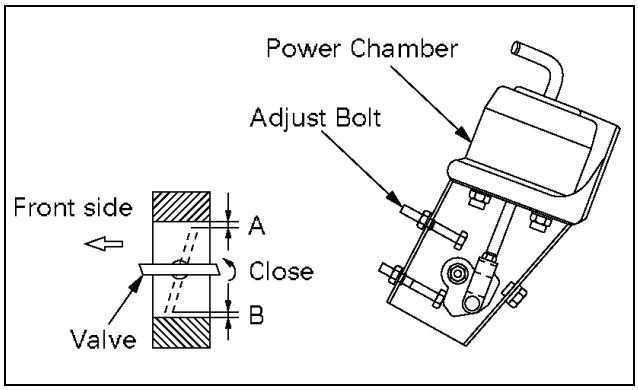

157LW001.tif

Apply a negative pressure of 86.7 - 93.3 kPa {650 - 700 mmHg} to the power chamber using a vacuum pump and make sure the average of measurements at Point A and Point B of the clearance between valve and body is as follows:

0.4 mm - 0.6 mm (Minimum: 0.4mm)

If the clearance is out of this range, adjust with the adjusting bolt.

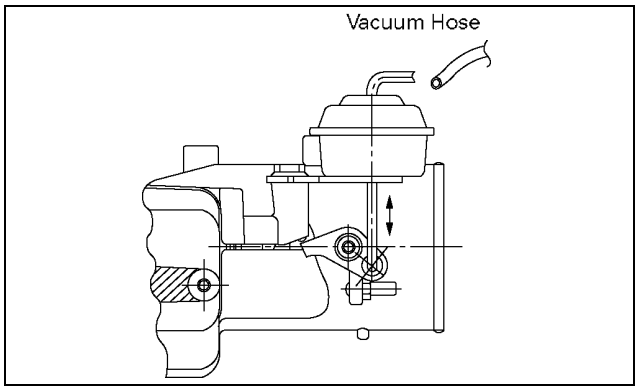

025LW001.tif

3. Intake Throttle Valve

Working

Disconnect the vacuum hose from the actuator and try to move the rod by hand, making sure of the smooth move of the rod.

4. Vacuum Switching Valve; Intake Throttle

Inspection

Connect the vacuum switching valve connector terminals No.1 and No.2 to (+) terminal and (-) terminals of battery, respectively, and check the continuity between the ports.

If the check result is abnormal, repair or replace the valve.

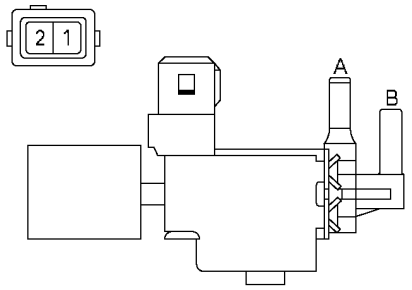

Volume Condition \ Port	A	B
Operation	○	○
Not Operation		

065LW005.tif

5. Accelerator Switch (2-pole connector type)

Inspection

1. Check the continuity between the switch connector terminals.

CAUTION: When measuring resistance with a circuit tester, be careful not to damage or deform the terminals.

2. Check the smooth move of the pushrod. If the check result is abnormal, repair or replace the pushrod.

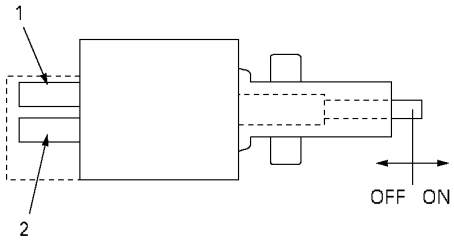

Switch position \ Connection pin	1	2
Release push rod	○	○
Push in Push rod		

065LW003.tif

Removal

1. Accelerator Switch
   Disconnect the connector.
   Loosen the lock nut.
   Turn the switch to remove.

Re installation

To install, follow the removal procedure in reverse order:

1. Drive the threaded part of the switch until its end surface becomes flush with that of the bracket side of nut.
2. Tighten the lock nut.

   Tightening torque: 1.3 N·m {130 kg·cm}

EGR SYSTEM MALFUNCTION

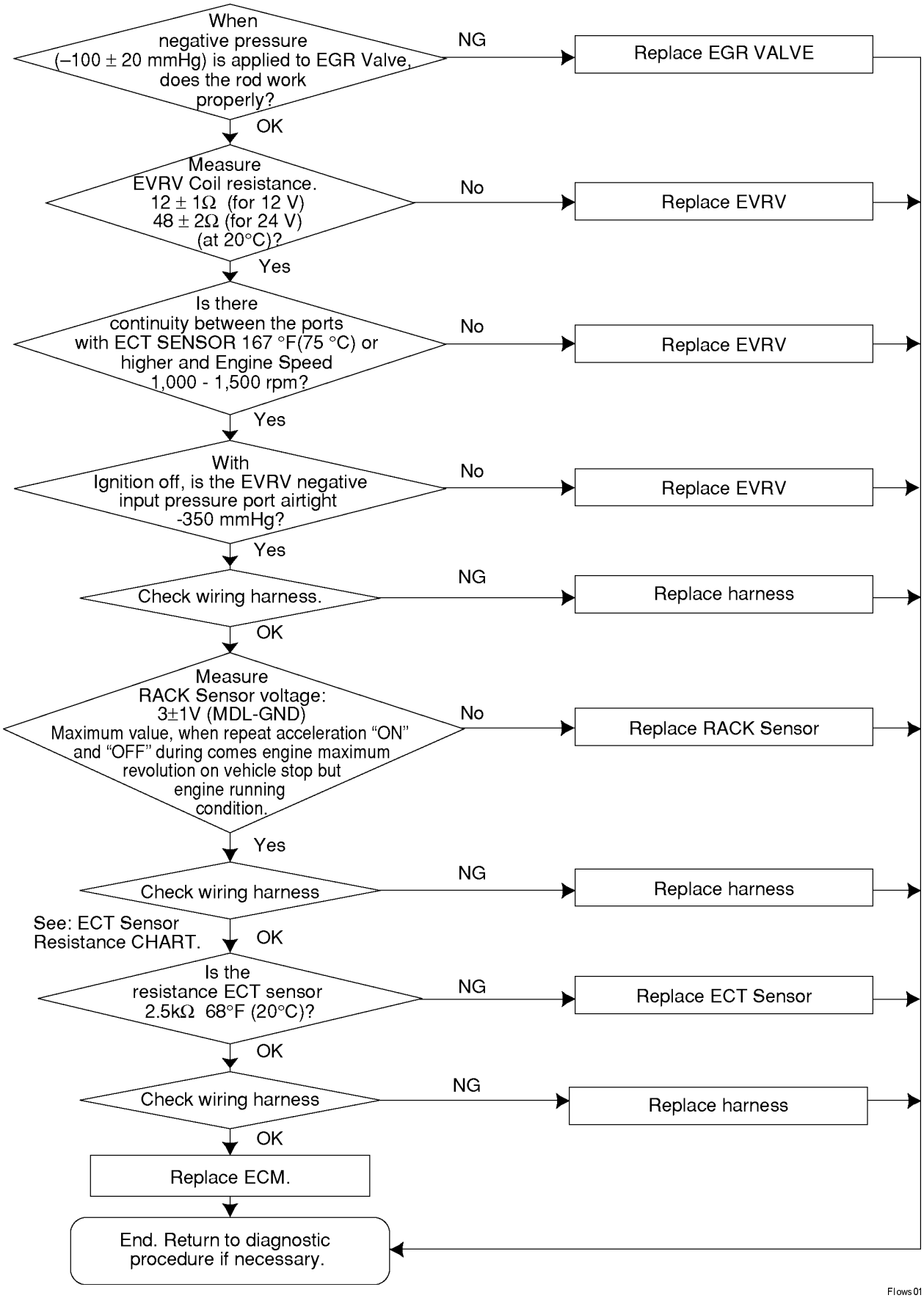

Flows01EGR.tif

INSPECTION

1. Thermosensor (Engine Coolant Temperature)

Soak the temperature sensitive part of a thermosensor in the water,and while changing the water temperature, make sure the resistance is changed as the following graph shows:

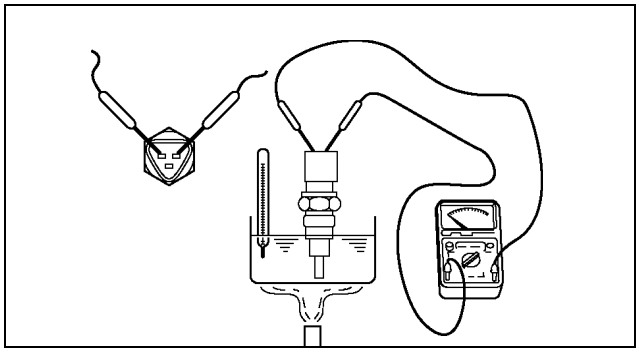

010LW001.tif

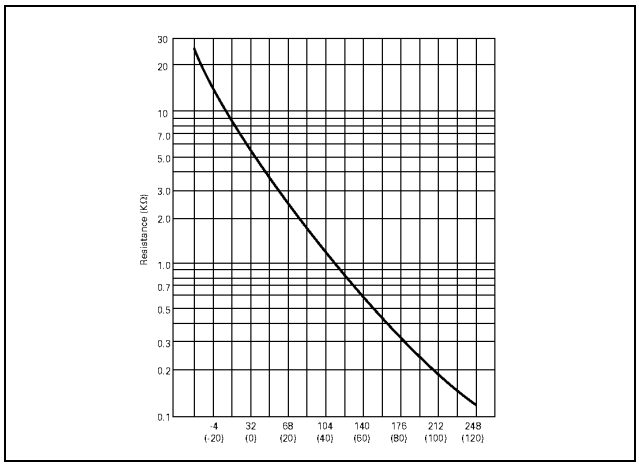

065LW004.tif

2. Electronic Vacuum Regulating Valve (EVRV) (Equipped with Exhaust Gas Recirculation (EGR) and Variable Swirl System (VSS))

1. Resistance Check

Check the resistance between the EVRV connector terminals using a circuit tester.
Cold Resistance: 12±1 (Ω)

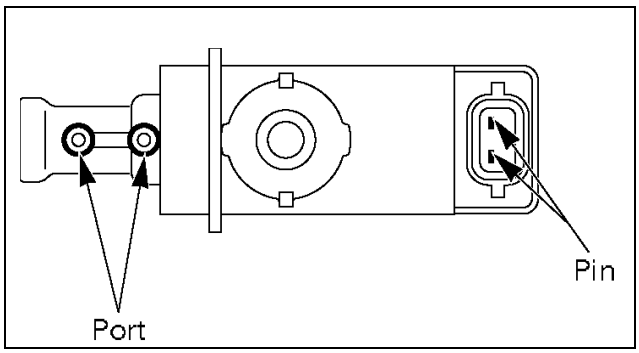

065LW031.tif

Connect battery voltage between EVRV connector terminals and make sure of the continuity between the ports.

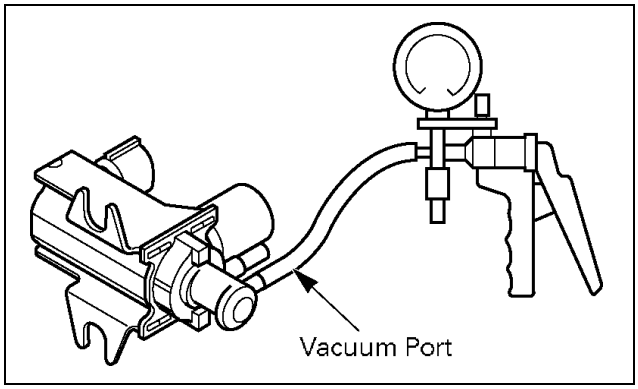

065LW002.tif

2. Airtight Check

Apply negative pressure to the negative pressure input port as illustrated on the left.
Although there is leakage, it is no problem if the negative pressure rises to -350 mmHg (-47 kPa) or more.

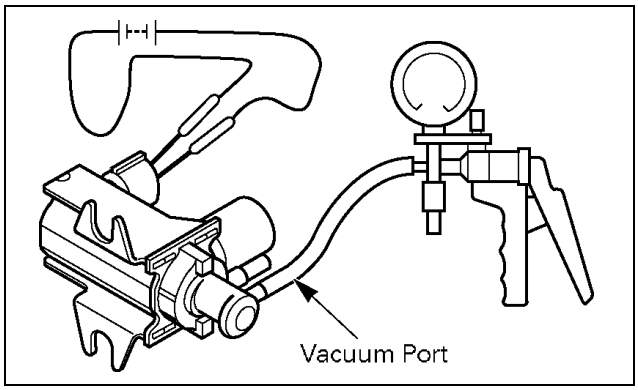

065LW032.tif

3. Working Check

Apply powervoltage between the terminals, there is no problem if the negative pressure does not rise when applied to the input port.

CAUTION: When measuring resistance with a circuit tester, be careful not to damage or deform the terminals.

3. Exhaust Gas Recirculation (EGR) Valve (Equipped with EGR and Variable Swirl System (VSS))

With negative pressure applied to the diaphragm chamber, make sure that the valve is smoothly actuated to make the area between (1) and (2) ventilated.
Startup: About -100 mmHg ± 20 mmHg

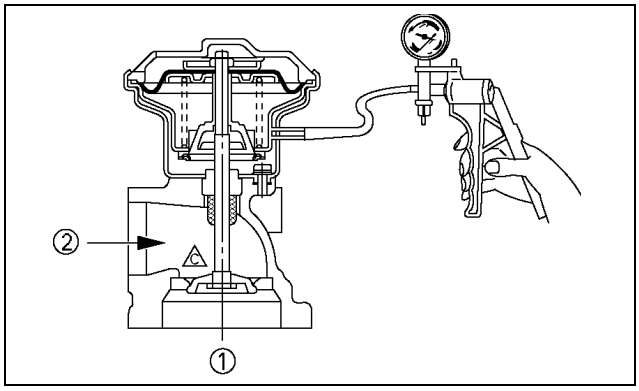

056LW009.tif

Check to see if EGR valve is normally actuated under the following conditions:
QWS off (After warming up)
Engine coolant temp.: 80 °C or higher

VARIABLE SWIRL SYSTEM (VSS) SYSTEM MALFUNCTION (Equipped with Exhaust gas recirculation and VSS)

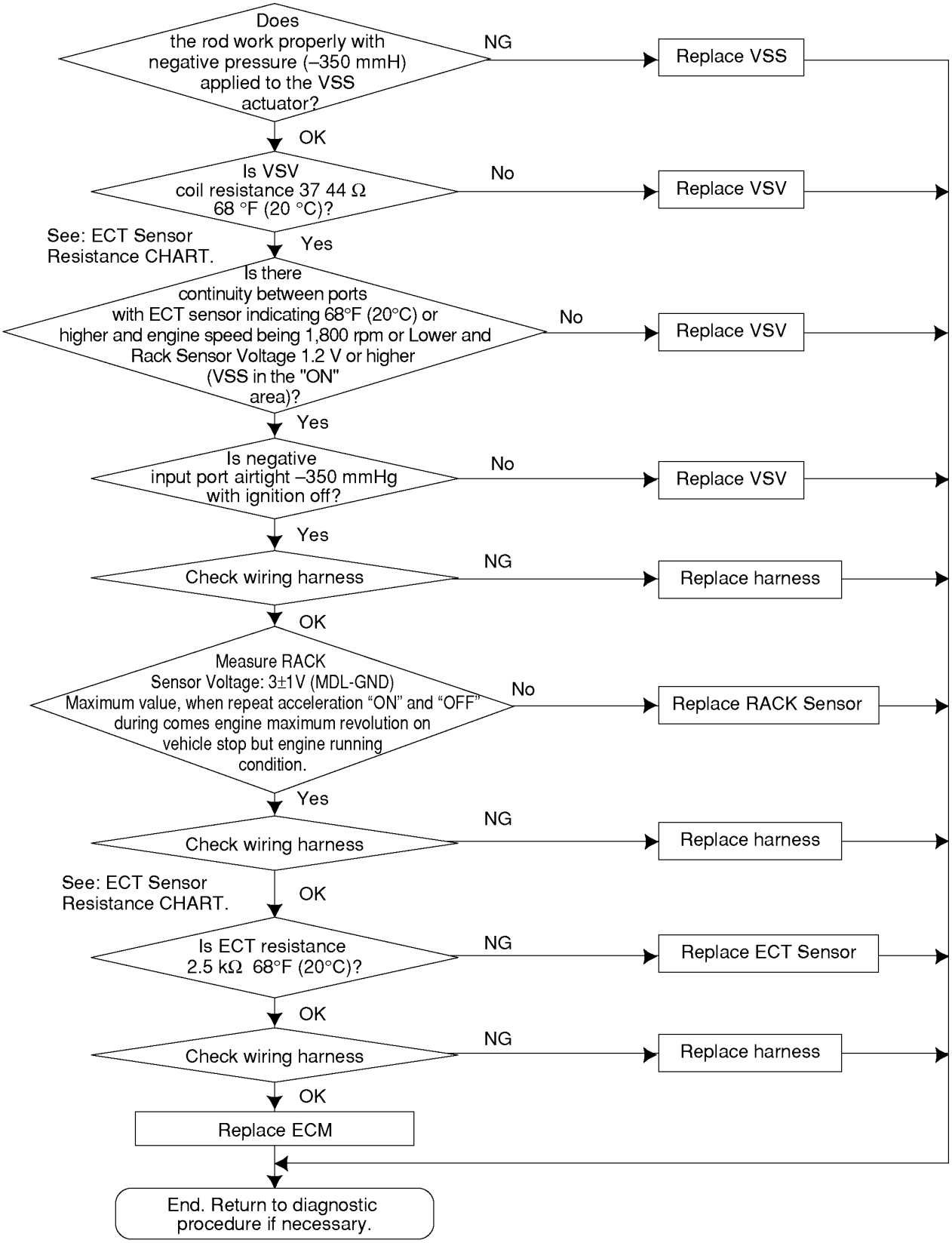

Flows04VSSys.tif

VSS (VARIABLE SWIRL SYSTEM)

The Variable Swirl System (VSS) is designed to adjust the intensity of swirl by allowing or not allowing air to flow through a sub-port (or bypass) the runs in parallel with the intake port for each cylinder. The swirl intensifies when there is no air flow through the sub-port, and vice versa.
The air flow is controlled by the on-off valve at the inlet to the sub-port and the valve in turn is turned on and off by computer signals which are dependent on engine speed, load and coolant temperature, Basically, the air is cut off at low speeds to maintain high swirl and is allowed to flow at high speeds to maintain low swirl.

VARIABLE SWIRL SYSTEM (Equipped with Exhaust gas recirculation (EGR) and VSS)

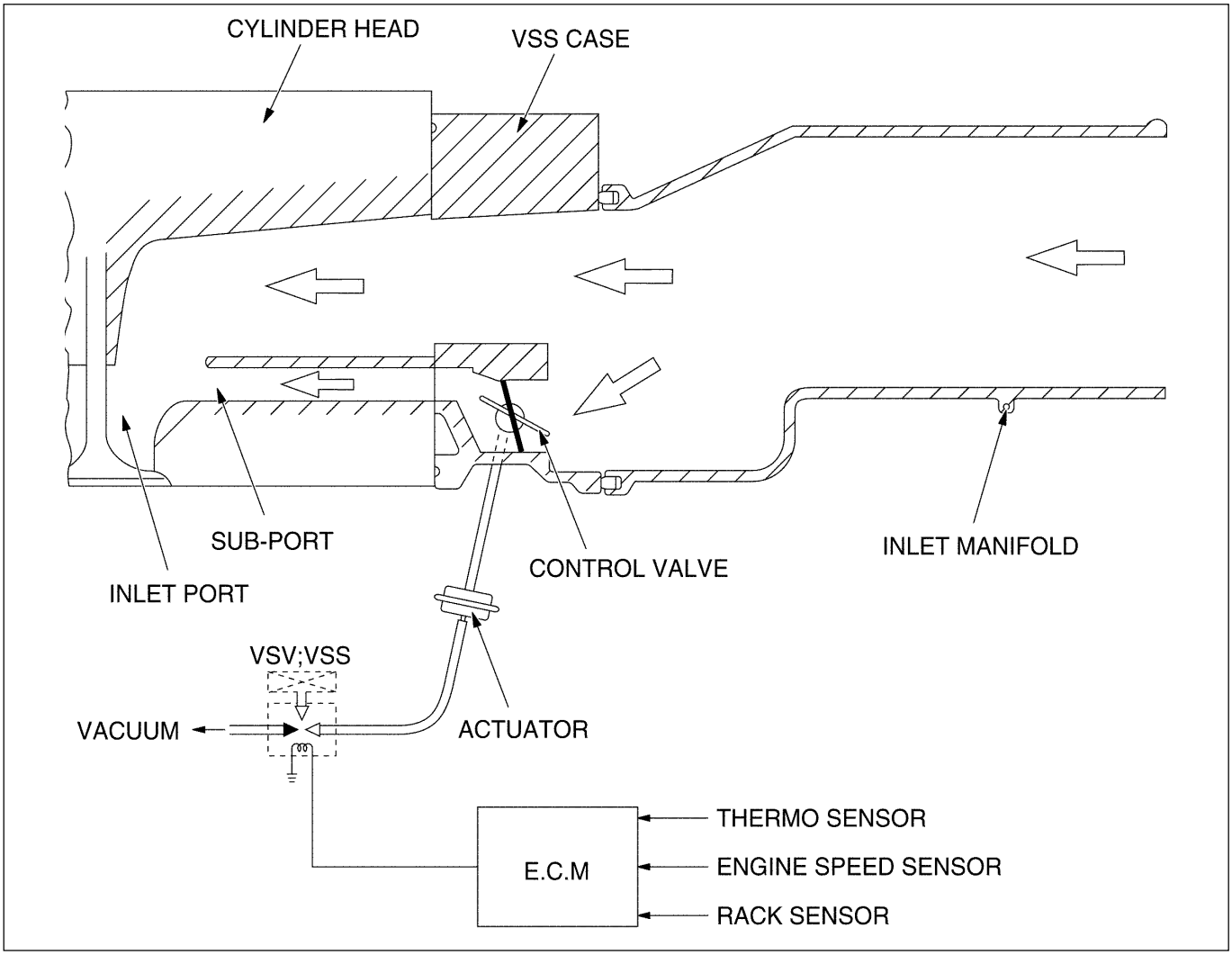

028LW001.tif

INSPECTION

1. Thermosensor (Engine coolant temperature)

Soak the temperature sensitive part of a thermosensor in the water, and while changing the water temperature, make sure the resistance is changed as the following graph shows:

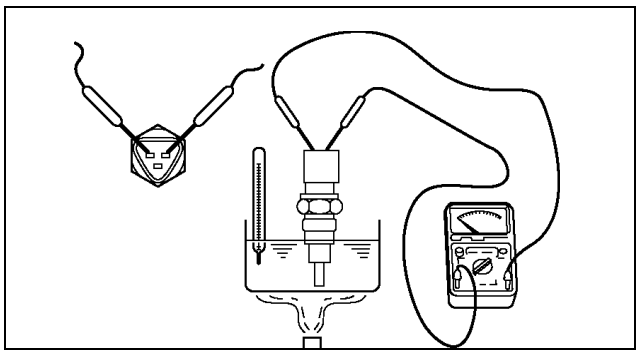

010LW001.tif

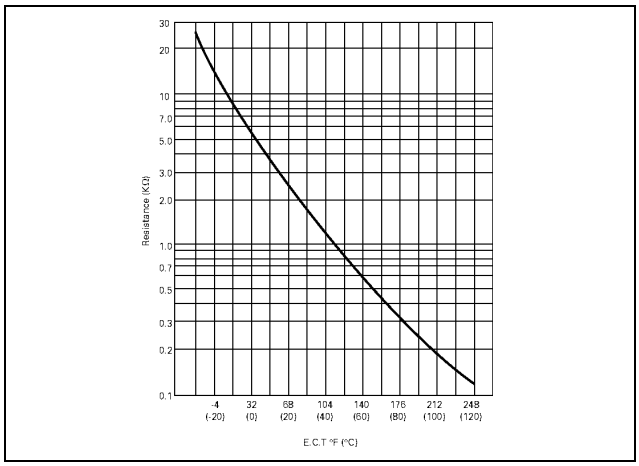

065LW004.tif

2. Vacuum Switching Valve (VSV)

1. Resistance Check

Check the resistance between the VSV connector terminals using a circuit tester.

Cold Resistance: 37 - 44 (Ω) (for 12 volt)

: 159 - 169 (Ω) (for 24 volt)

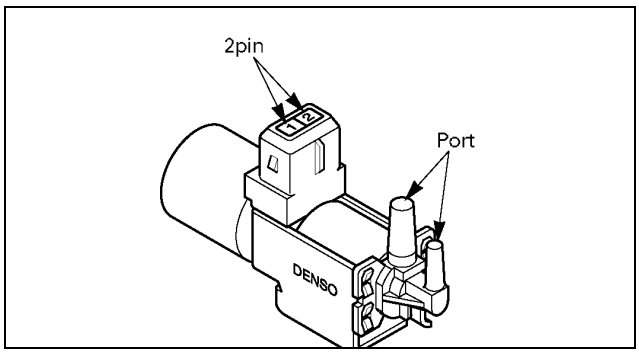

056LW026.tif

Connect battery voltage between VSV connector terminals and make sure of the continuity between the ports.

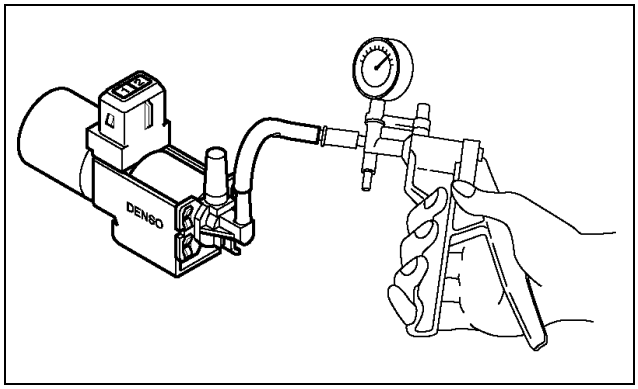

056LW028.tif

2. Airtight Check

Apply negative pressure to the negative pressure input port as illustrated on the left.

Although there is leakage, it is no problem if the negative pressure rises to -350 mmHg (-47 kPa) or more.

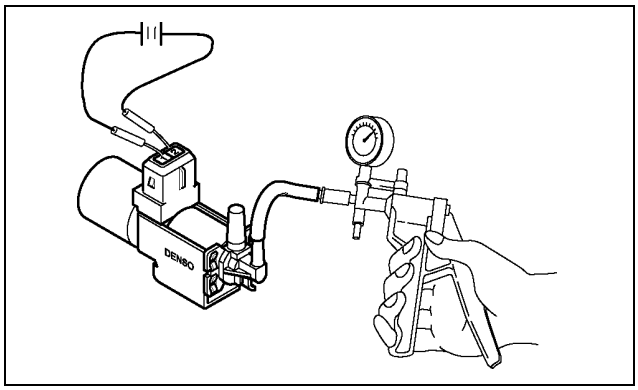

056LW027.tif

3. Working Check

Apply powervoltage between the terminals, there is no problem if the negative pressure does not rise when applied to the input port.

CAUTION: When measuring resistance with a circuit tester, be careful not to damage or deform the terminals.

ANEROID COMPENSATOR MALFUNCTION

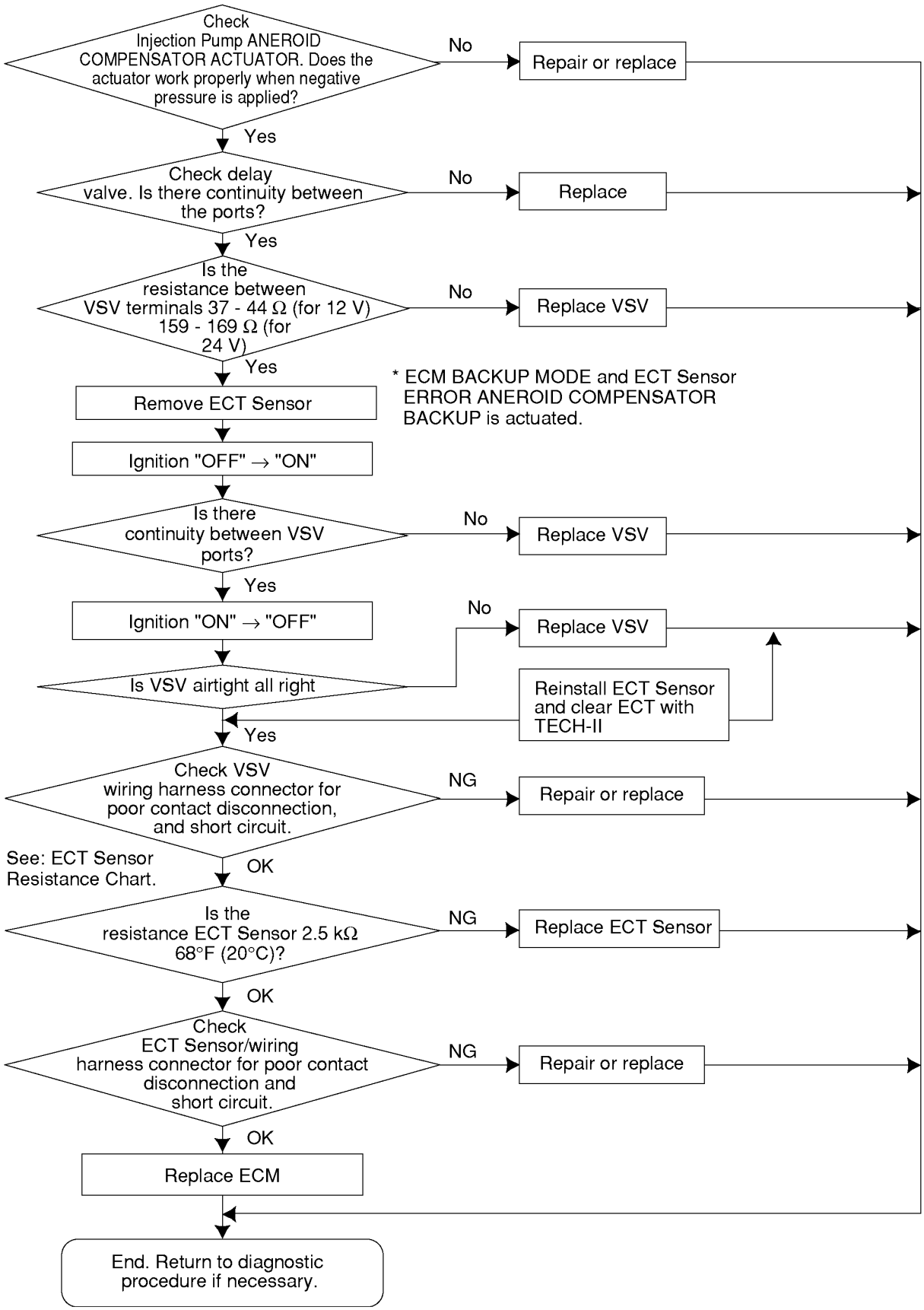

Flows03Aneroid.tif

INSPECTION

1. Thermosensor (Engine coolant temperature (ECT))

Soak the temperature sensitive part of a thermosensor in the water, and while changing the water temperature, make sure the resistance is changed as the following graph shows:

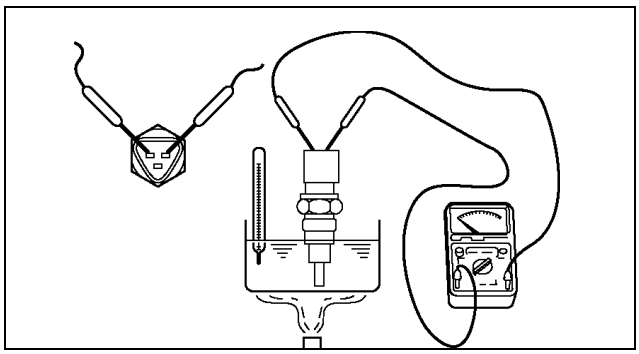

010LW001.tif

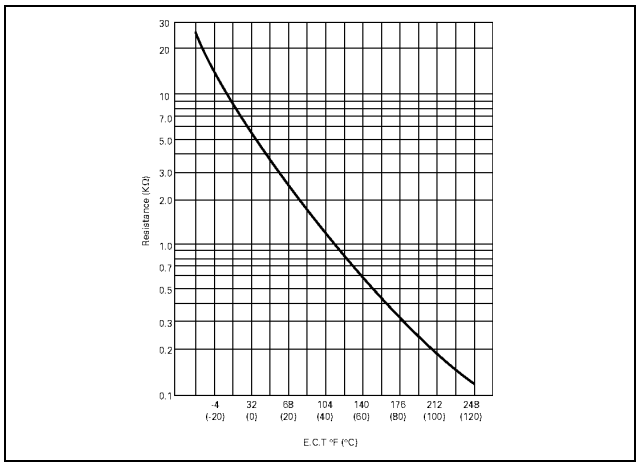

065LW004.tif

2. Vacuum Switching Valve (VSV)

1. Resistance Check

Check the resistance between the VSV connector terminals using a circuit tester.

Cold Resistance: 37 - 44 (Ω) (for 12 Volt)

: 159 - 169 (Ω) (for 24 Volt)

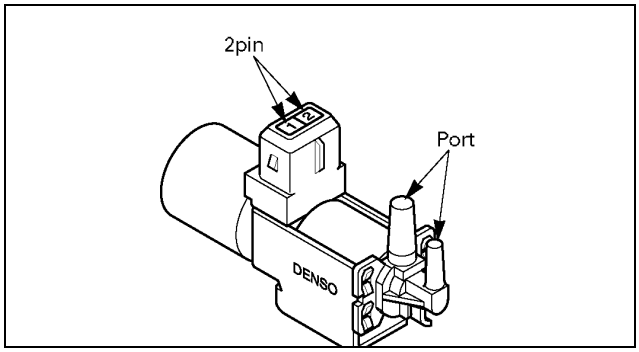

056LW026.tif

Connect battery voltage between VSV connector terminals and make sure of the continuity between the pots.

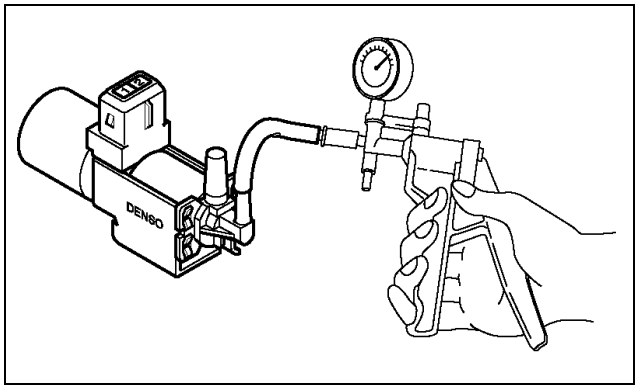

056LW028.tif

2. Airtight Check

Apply negative pressure to the negative pressure input port as illustrated on the left.

Although there is leakage, it is no problem if the negative pressure rises to -350 mmHg (-47 kPa) or more.

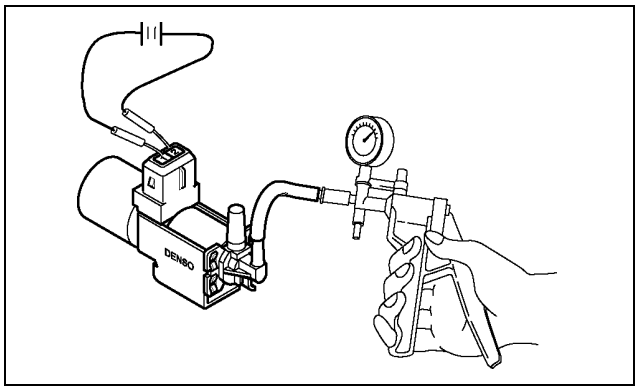

056LW027.tif

3. Working Check

Apply powervoltage between the terminals, there is no problem if the negative pressure does not rise when applied to the input port.

CAUTION: When measuring resistance with a circuit tester, be careful not to damage or deform the terminals.

3. Actuator

Diaphragm is built in the actuator, by which the inside of the actuator is divided into two, atmospheric room and negative pressure room.

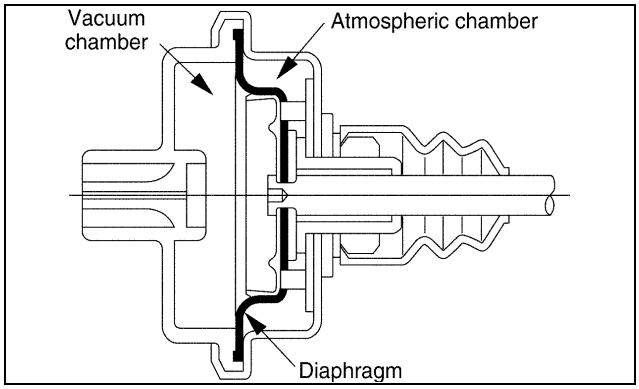

040LW005.tif

4. Aneroid compensator Actuator

The link of the actuator for the aneroid compensator is connected to full load set lever. The full load set lever is connected to a U-lever. When the atmospheric sensor built in Engine Control Module (ECM) makes the actuator work, the full load set lever and U-lever are rotated to a specified position so that the control rack is drawn in the direction of reducing fuel injection amount.

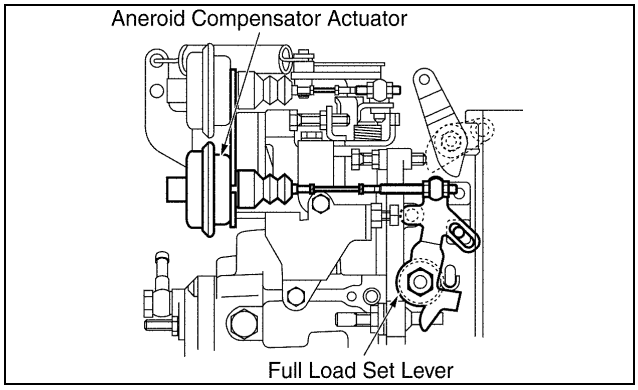

040LW003.tif

QUICK WARM SYSTEM MALFUNCTION

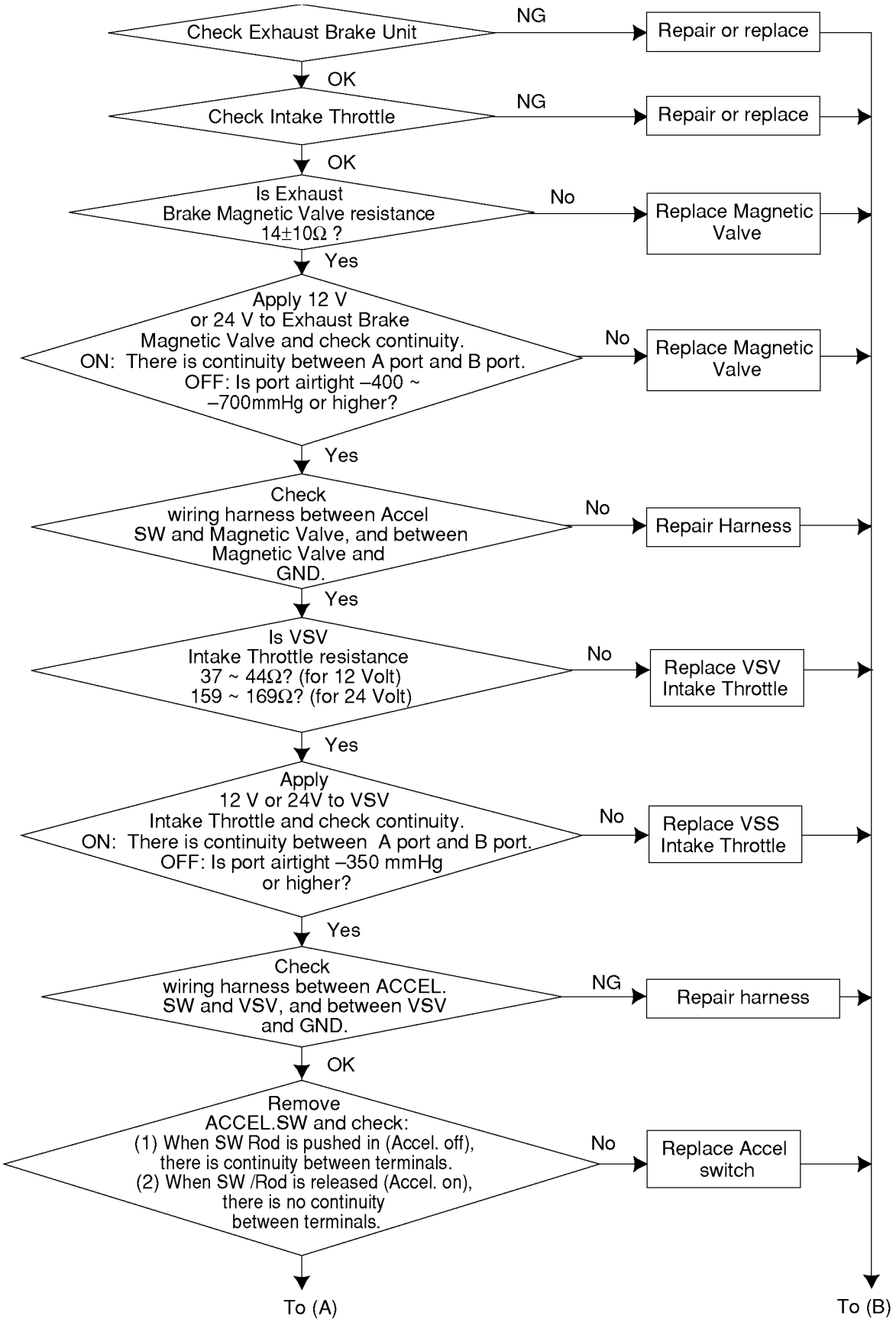

Flows 05QWS.tif

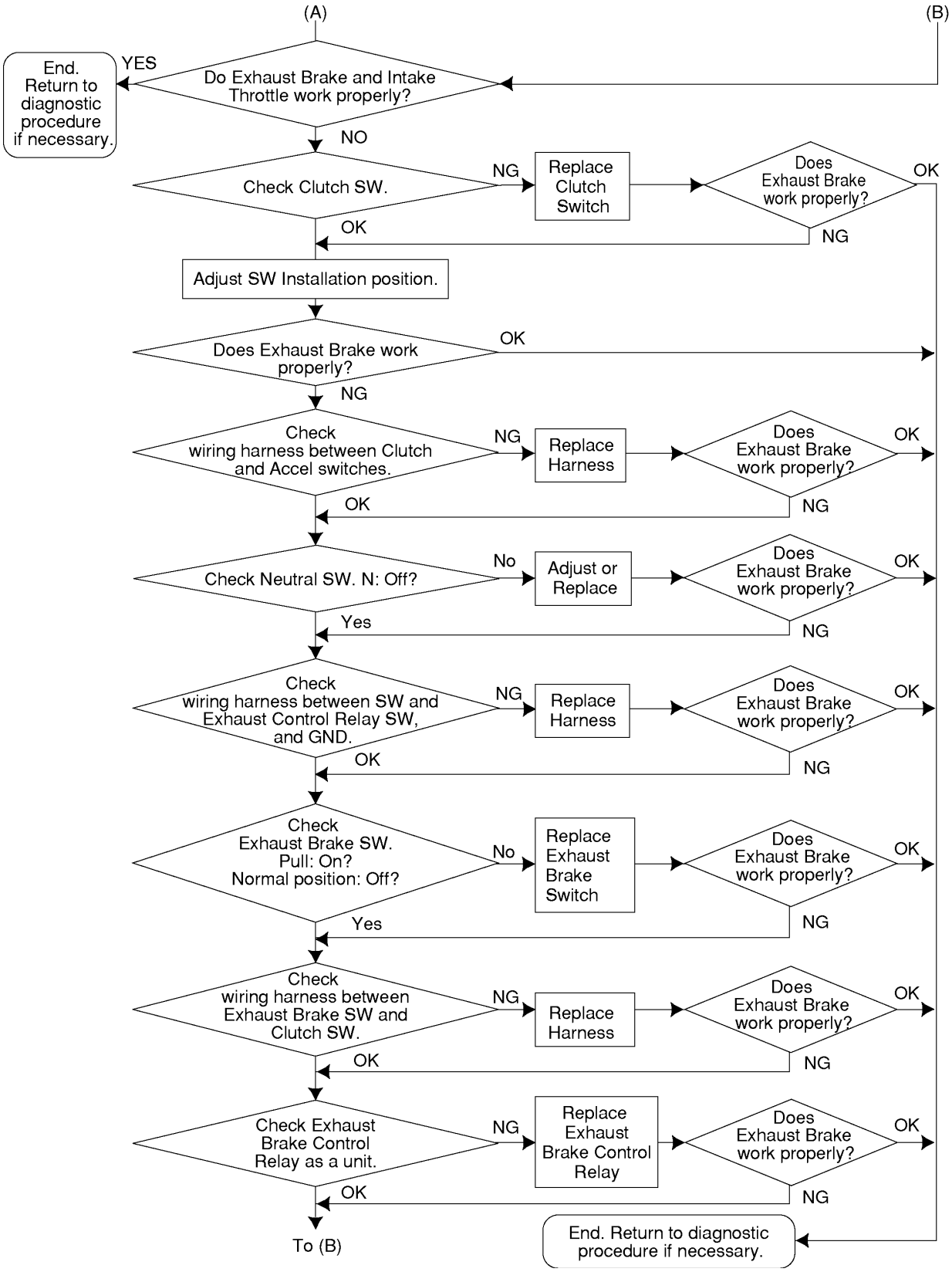

Flows08QWSsysCheck.tif

INSPECTION

1. Exhaust Throttle Valve

Working

Actuate the exhaust brake with the engine idling and make sure that you hear the valve strike on the stopper.

Unit

apply a negative pressure of -53.3 kPa ~ -93.3 kPa {-400 mmHg ~ -700 mmHg} to the power chamber by means of a vacuum pump and make sure of the smooth opening/closing of the exhaust brake valve.

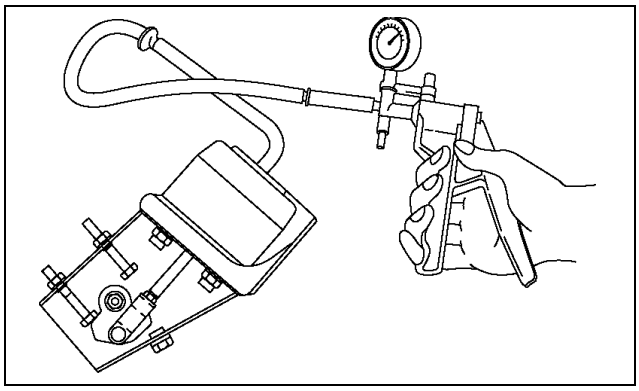

157LW002.tif

Apply a negative pressure of -86.7 ~ -93.3 kPa {-650 ~ -700 mmHg} to the power chamber using a vacuum pump and make sure the average of measurements at Point A and Point B of the clearance between valve and body is as follows:

0.4 mm - 0.6 mm (Minimum: 0.4 mm)

If the clearance is out of this range adjust with the adjusting bolt.

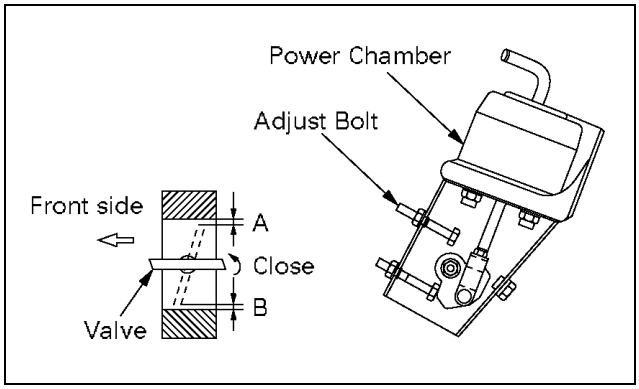

157LW001.tif

2. Intake Throttle Valve

Working

Disconnect the vacuum hose from the actuator and try to move the rod by hand, making sure of the smooth move of the rod.

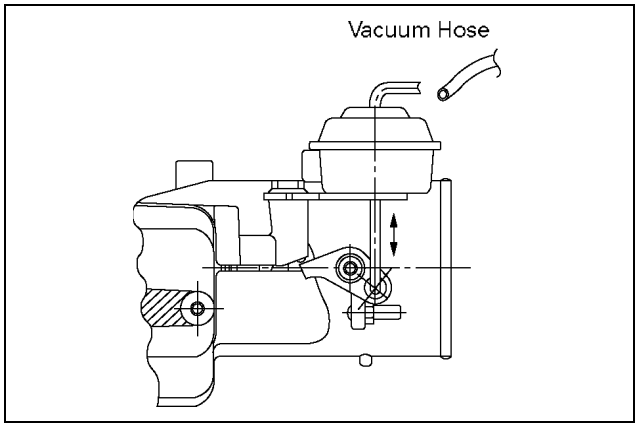

025LW001.tif

3. Exhaust Brake Magnetic Valve

Inspection

Connect the magnetic valve connector terminal No.1 and No.2 to (+) terminal and (-) terminal of battery respectively, and check the continuity between the ports.

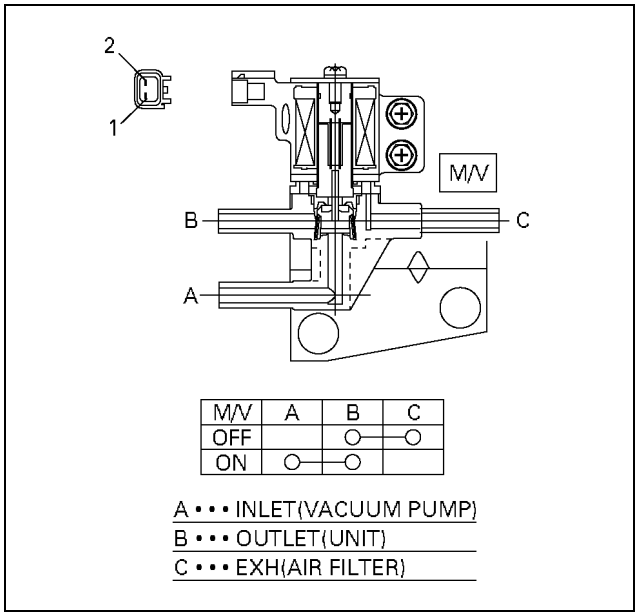

M/V	A	B	C
OFF		○	○
ON	○	○	

056LW010.tif

4. Accelerator Switch (2-pole connector type)

Inspection

1. Check the continuity between the switch connector terminals.
2. Check the smooth move of the pushrod. If the check result is abnormal, repair or replace the pushrod.

CAUTION: When measuring resistance with a circuit tester, be careful not to damage or deform the terminals.

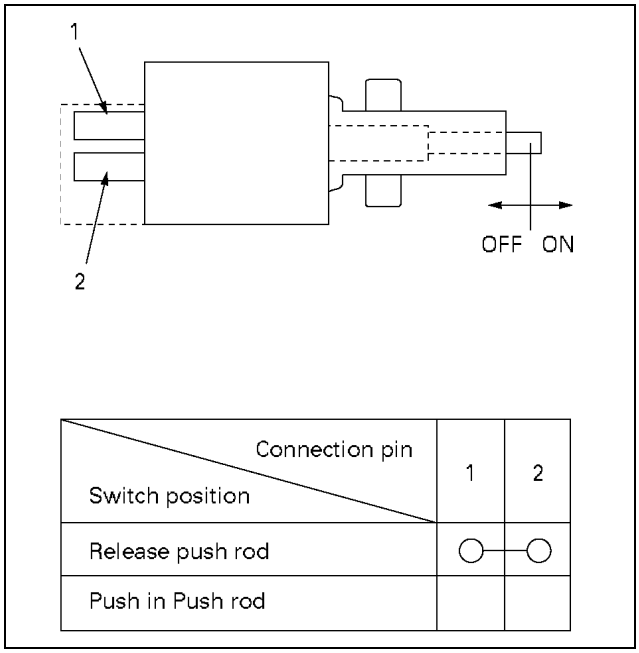

Switch position \ Connection pin	1	2
Release push rod	○	○
Push in Push rod		

065LW003.tif

Removal

1. Accelerator Switch
   Disconnect the connector.
   Loosen the lock nut.
   Turn the switch to remove.

Reinstallation

To install, follow the removal procedure in reverse order:

1. Drive the threaded part of the switch until its end surface becomes flush with that of the bracket side of nut.
2. Tighten the lock nut.

Tightening torque: 1.3 N·m {130 kg·cm}

5. Thermosensor (Engine coolant temperature)

Soak the temperature sensitive part of a thermosensor in the water, and while changing the water temperature, make sure the resistance is changed as the following graph shows:

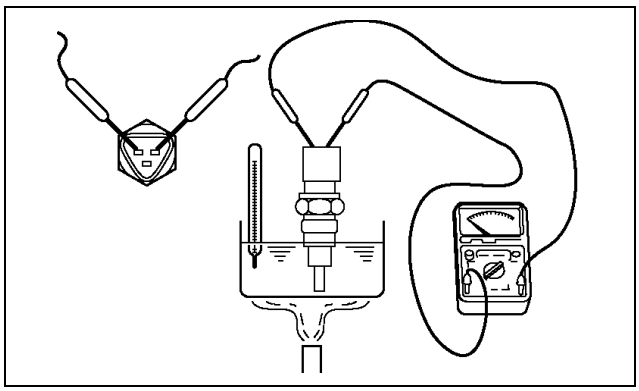

010LW001.tif

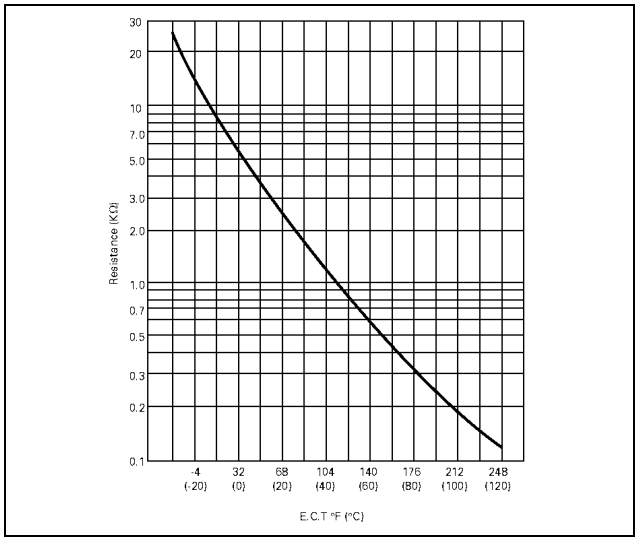

065LW004.tif

6. Vacuum Switching Valve; Intake Throttle

Inspection

Connect the vacuum switching valve connector terminals No.1 and No.2 to (+) terminal and (-) terminals of battery respectively, and check the continuity between the ports.
If the check result is abnormal, repair or replace the valve.

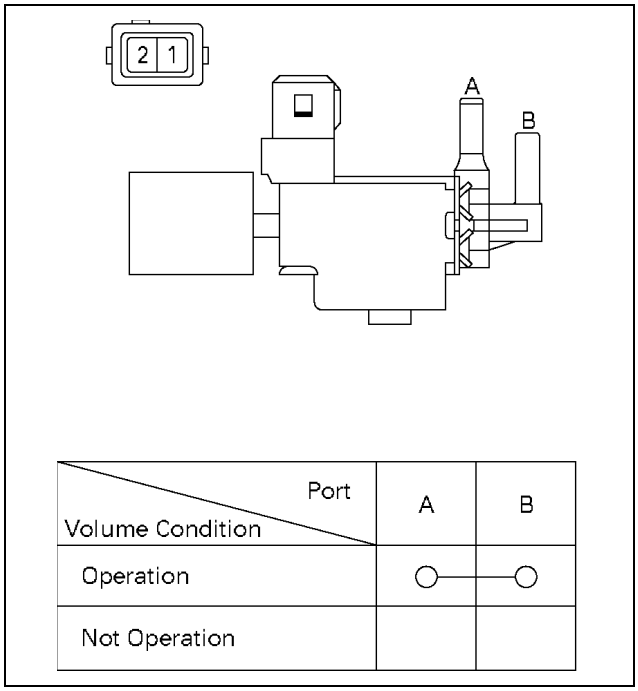

Volume Condition \ Port	A	B
Operation	○	○
Not Operation		

065LW005.tif

CAUTION: When measuring resistance with a circuit tester, be careful not to damage or deform the terminals.

FAST IDLE CONTROL DEVICE (FICD) SYSTEM MALFUNCTION

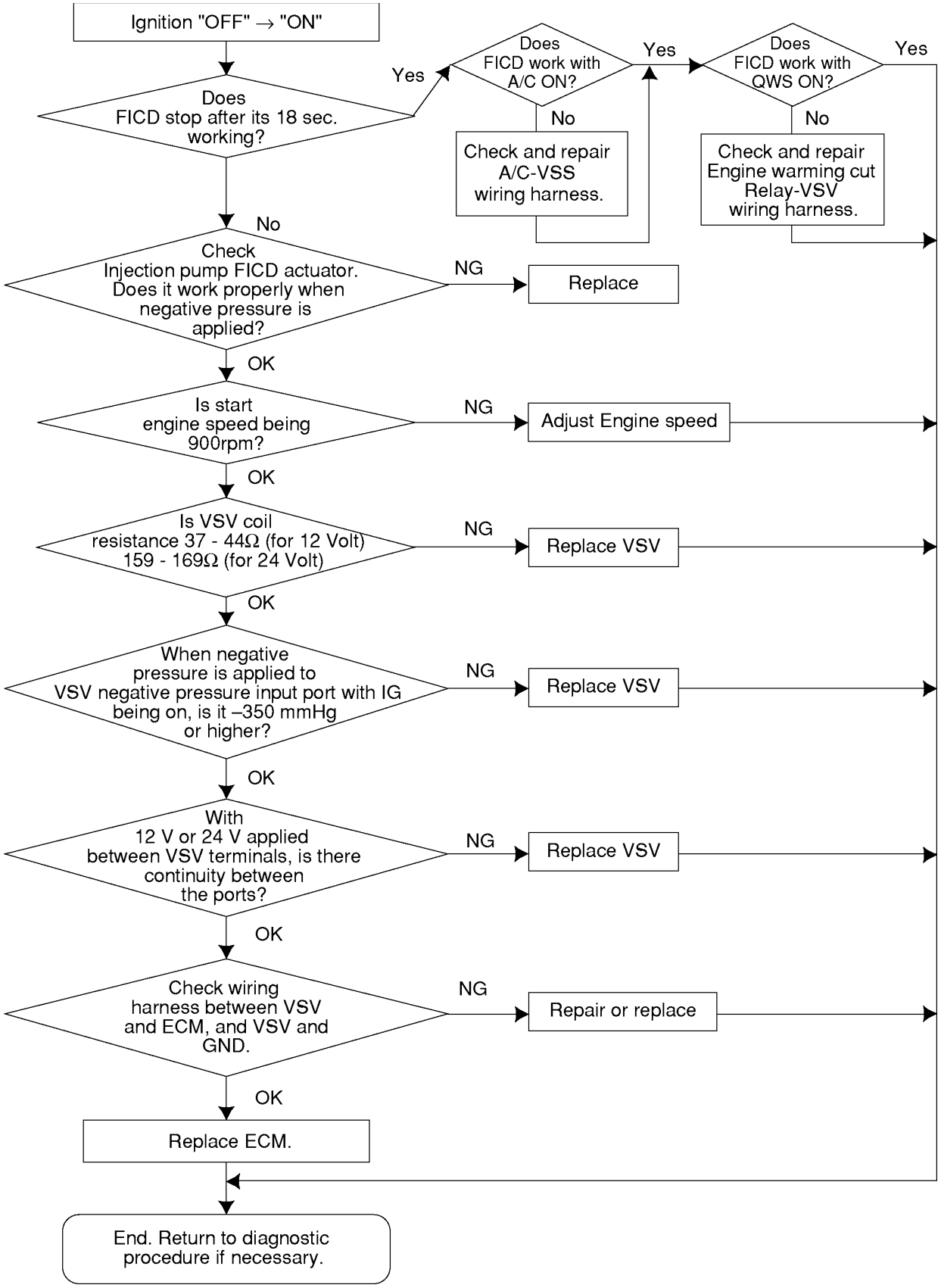

Flows02FICD.tif

INSPECTION

1. Vacuum Switching Valve (VSV)

1. Resistance Check

Check the resistance between the VSV connector terminals using a circuit tester.
Cold Resistance: 37 - 44 (Ω) (for 12 Volt)
: 159 - 169 (Ω) (for 24 Volt)

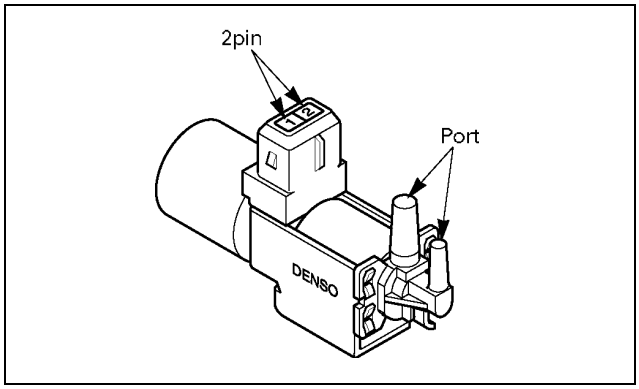

056LW026.tif

Connect battery voltage between VSV connector terminals and make sure of the continuity between the ports.

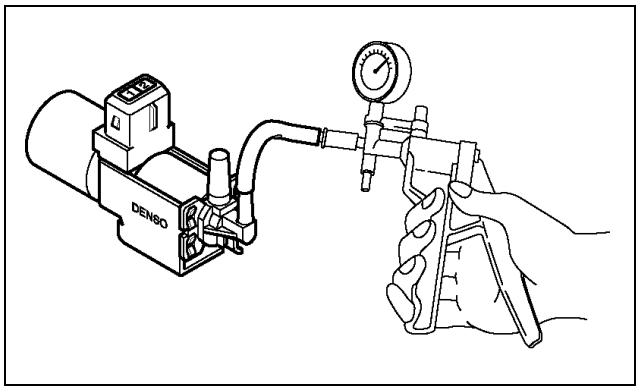

056LW028.tif

2. Airtight Check

Apply negative pressure to the negative pressure input port as illustrated on the left.

Although there is leakage, it is no problem if the negative pressure rises to -350 mmHg (-47 kPa) or more.

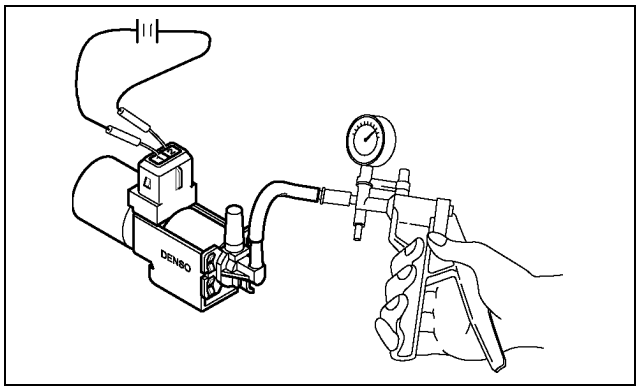

056LW027.tif

CAUTION: When measuring resistance with a circuit tester, be careful not to damage or deform the terminals.

3. Working Check

Apply powervoltage between the terminals, there is no problem if the negative pressure does not rise when applied to the input port.

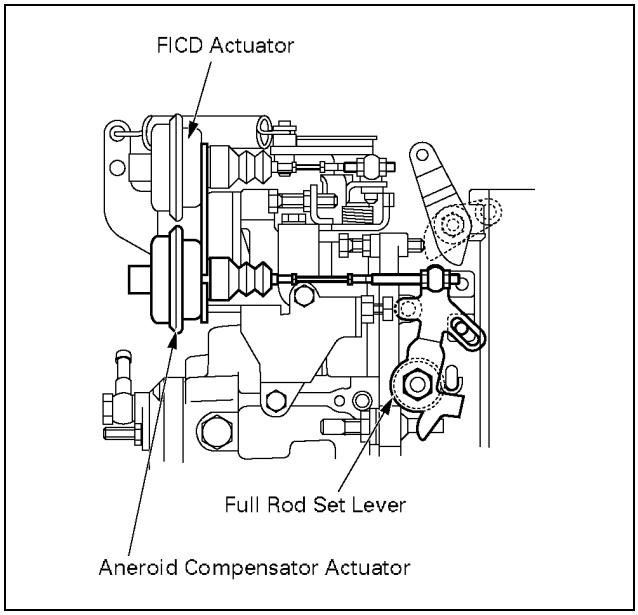

040LW009.tif

1) Diaphragm is built in the actuator, by which the inside of the actuator is divided into two, atmospheric room and negative pressure room.

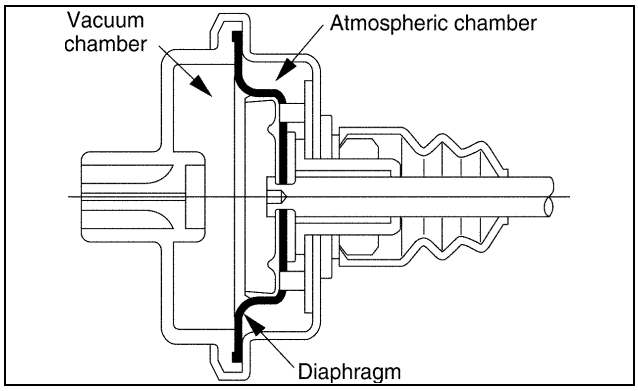

040LW005.tif

2) Fast Idle Control Device (FICD) actuator link is connected to FICD lever, setting speed control lever at a specified speed when FICD is at work at the time of idling.

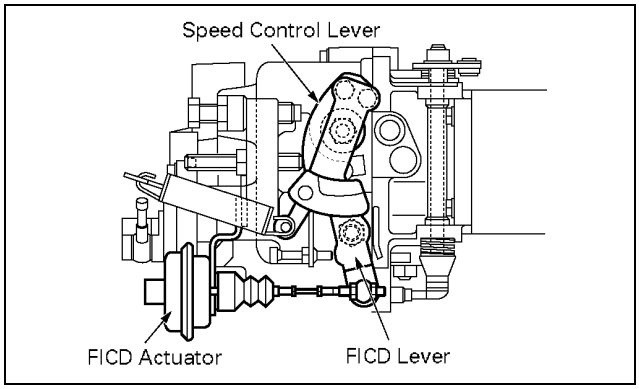

040LW004.tif

3) The link of the actuator for the aneroid compensator is connected to full load set lever. The full load set lever is connected to a U-lever. When the atmospheric sensor built in Engine Control Module (ECM) makes the actuator work, the full load set lever and U-lever are rotated to a specified position so that the control rack is drawn in the direction of reducing fuel injection amount.

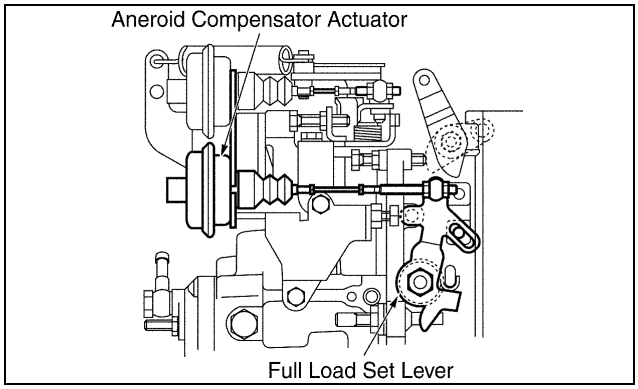

040LW003.tif

SPECIAL TOOLS

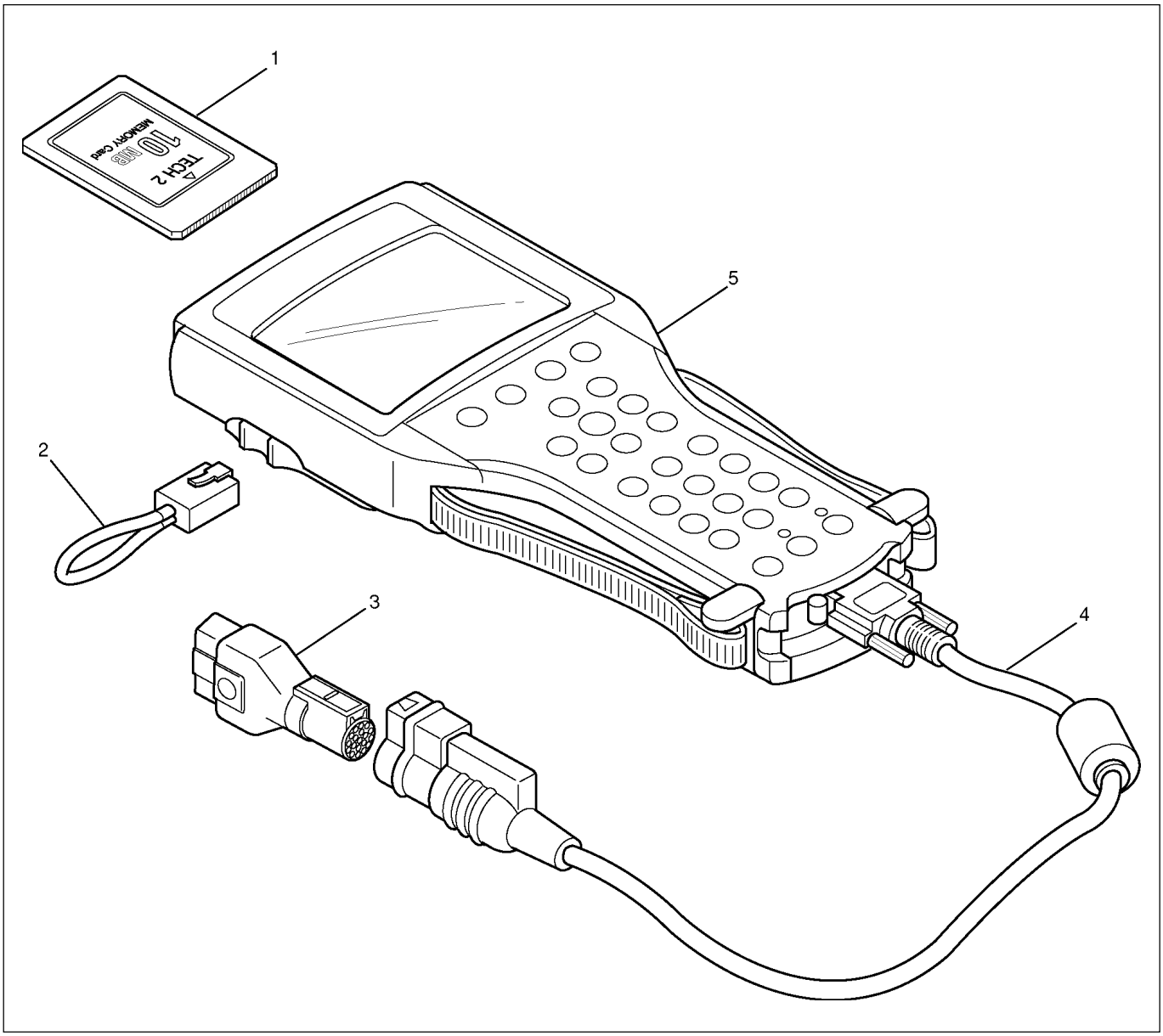

901RW180.tif

Legend

(1) PCMCIA Card
(2) RS232 Loop Back Connector
(3) SAE 16/19 Adapter
(4) DLC Cable
(5) TECH-2

ILLUSTRATION	TOOL NO. TOOL NAME
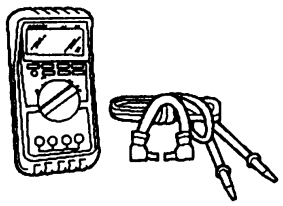 6E-143-1.tif	**5-8840-0366-0** **(J 39200)** High Impedance Multimeter (Digital Voltmeter-DVM)
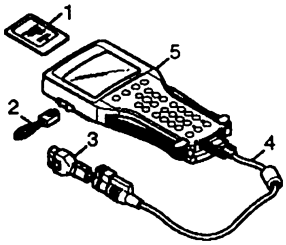 6E-143-2.tif	(1) PCMCIA Card (2) RS232 Loop Back (3) SAE 16/19 Adapter (4) DLC Cable (5) TECH-2
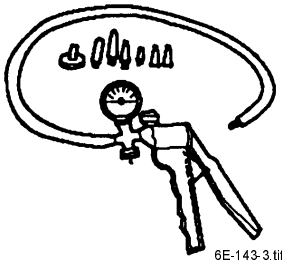 6E-143-3.tif	**5-8840-0279-0** **(J 23738-A)** Vacuum Pump with Gauge

DIAGNOSIS (4HG1-T Only)

STRATEGY-BASED DIAGNOSTICS

Strategy-Based Diagnostics

The strategy-based diagnostic is a uniform approach to repair all Electrical/Electronic (E/E) systems. The diagnostic flow can always be used to resolve an E/E system problem and is a starting point when repairs are necessary. The following steps will instruct the technician how to proceed with a diagnosis:

1. Verify the customer complaint.
   - To verify the customer complaint, the technician should know the normal operation of the system.
2. Perform preliminary checks.
   - Conduct a thorough visual inspection.
   - Review the service history.
   - Detect unusual sounds or odors.
   - Gather diagnostic trouble code information to achieve an effective repair.
3. Check bulletins and other service information.
   - This includes videos, newsletters, etc.
4. Refer to service information (manual) system check (s).
   - “System checks” contain information on a system that may not be supported by one or more DTCs.
     System checks verify proper operation of the system. This will lead the technician in an organized approach to diagnostics.
5. Refer to service diagnostics.

Diagnostic Trouble Code (DTC) Stored

Follow the designated DTC chart exactly to make an effective repair.

No DTC

Select the symptom from the symptom tables. Follow the diagnostic paths or suggestions to complete the repair. You may refer to the applicable component/system check in the system checks.

No Matchig Symptom

1. Analyze the complaint.
2. Develop a plan for diagnostics.
3. Utilize the wiring diagrams and the theory of operation.

Call technical assistance for similar cases where repair history may be available. Combine technician knowledge with efficient use of the available service information.

Intermittents

Conditions that are not always present are called intermittents. To resolve intermittents, perform the following steps:

1. Evaluate the symptoms and the conditions described by the customer.
2. Use a check sheet or other method to identify the circuit or electrical system component.
3. Follow the suggestions for intermittent diagnosis found in the service documentation.

No Trouble Found

This condition exists when the vehicle is found to operate normally. The condition described by the customer may be normal. Verify the customer complaint against another vehicle that is operating normally. The condition may be intermittent. Verify the complaint under the conditions described by the customer before releasing the vehicle.

1. Re-examine the complaint
   When the Complaint cannot be successfully found or isolated, a re-evaluation is necessary. The complaint should be re-verified and could be intermittent as defined in Intermittents, or could be normal.
2. Repair and verify.
   After isolating the cause, the repairs should be made.
   Validate for proper operation and verify that the symptom has been corrected. This may involve road testing or other methods to verify that the complaint has been resolved under the following conditions:

- Conditions noted by the customer.
- If a DTC was diagnosed, verify a repair by duplicating conditions present according to customer complaint.

Verifying Vehicle Repair

Verification of the vehicle repair will be more comprehensive for vehicles with self diagnostic system diagnostics. Following a repair, the technician should perform the following steps:

IMPORTANT:

Follow the steps below when you verify repairs on self diagnostic systems. Failure to follow these steps could result in unnecessary repairs.

1. Review and record the Failure Records for the DTC which has been diagnosed.
2. Clear the DTCs.
3. Operate the vehicle within conditions according to customer complaint.

4. Monitor the Diagnostic Trouble Code (DTC) status information for the specific DTC which has been diagnosed until the diagnostic test associated with that DTC runs.

GENERAL SERVICE INFORMATION

Visual/Physical Engine Compartment Inspection

Perform a careful visual and physical engine compartment inspection when performing any diagnostic procedure or diagnosing the cause of an emission test failure. This can often lead to repairing a problem without further steps. Use the following guidelines when performing a visual/physical inspection:

- Inspection all vacuum hoses for punches, cuts, disconnects, and correct rouring.
- Inspect hoses that are difficult to see behind other components.
- Inspent all wires in a engine compartment for proper connections, burned or chafed spots, pinched wires, contact with sharp edges or contact with hot exhaust manifolds or pipes.

Basic Knowledge of Tools Required

NOTE:

Lack of basic knowledge of this powertrain when performing diagnostic procedures could result in an incorrect diagnosis or damage to powertrain components. Do not attempt to diagnose a powertrain problem without this basic knowledge.

A basic understanding of hand tools is necessary to effectively use this section of the Servise Manual

SELF DIAGNOSTIC System Check

Self Diagnostic System should be checked as follows:

1. When Ignition key is turned from the “OFF” to the “ON” position, make sure that Malfunction Indicator Lamp (MIL) is lit for 0.3 sec. to 0.8 sec.
2. Connect Scan Tool and check to see if MIL is always lit.
   If so, Self Diagnostic System is normal.

TROUBLESHOOTING

Caution taken in inspecting

(1) In inspecting system, write down Diagnostic Trouble Code (DTC) to be indicated. (especially, when plural self-diagnosis codes are indicated.)

(2) Before eliminating the indicated DTC by a memory clear switch, doubly inspect abnormal place as indicated in DTC.

Inspection procedure flowchart (Diagnostic System Check)

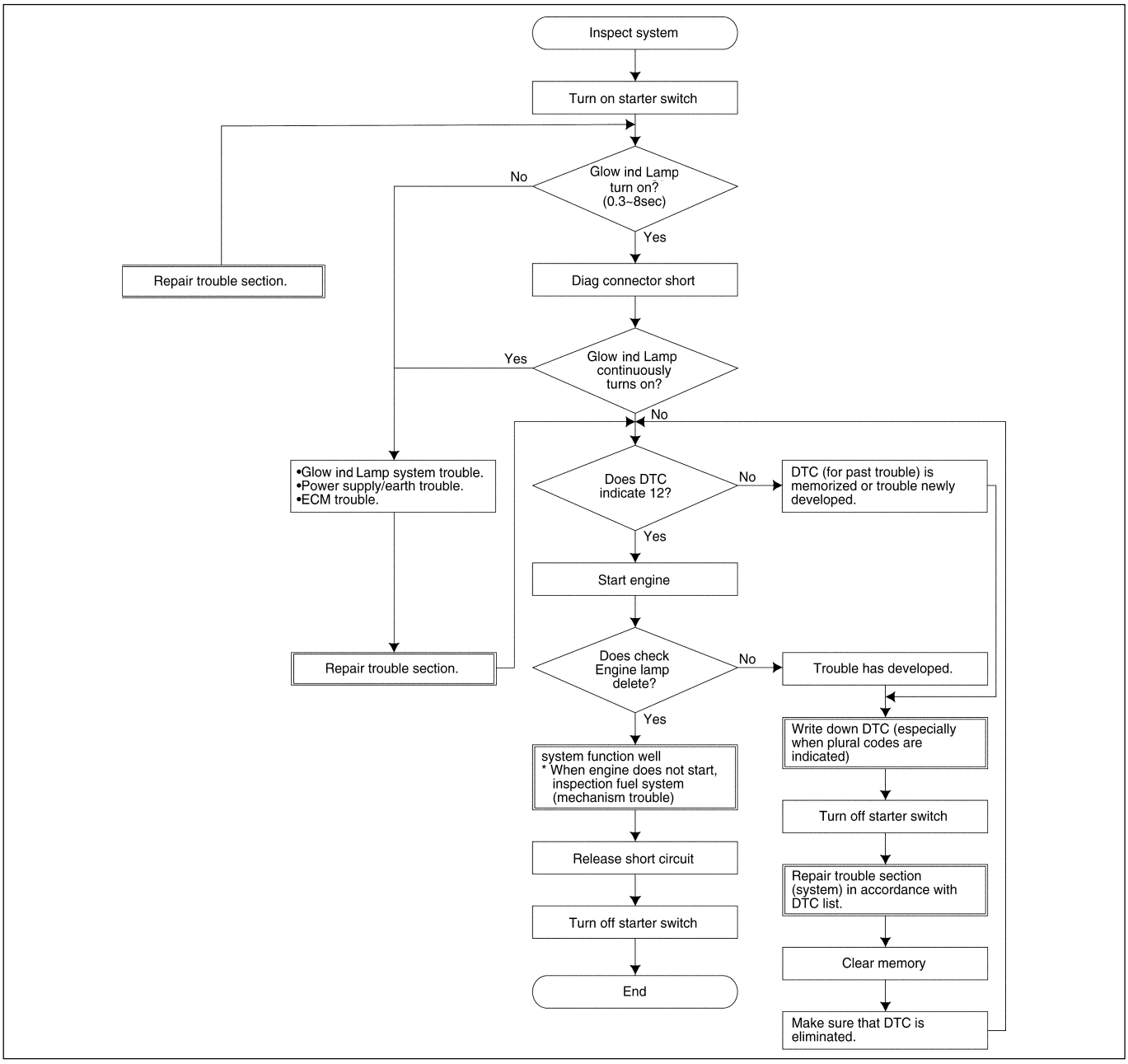

flowchart_13-2.tif

NOTE:

Please note that some items of DTC may not be generated unless the engine is warmed up or unless the vehicle is driven under load.

SELF-DIAGNOSIS FUNCTIONS

(1) Memorization of diagnostic trouble code

The self-diagnosis code indicated will be memorized in Electronically Erasable Programmable Read Only Memory (EEPROM) with in the Engine Control Module (ECM). Accordingly even if the starter switch turns off or the ECM is removed from the vehicle, the memorized self-diagnosis code will not be eliminated.

* Unless an elimination procedure is taken, the diagnostic trouble code (DTC) will remain in memory. (The memory will be eliminated only by a memory clear switch.)

(2) Elimination of diagnostic trouble code

The DTC memorized in the EEPROM with in the ECM can be eliminated only by the operation of the memory clear switch.
The elimination method memory clear switch will be described below:

1. Turn OFF ignition switch.
2. Use 4.7kΩ resistance and make short circuit on memory clear switch.
3. Turn ON ignition switch. The indication lamp turn on (lighting) continuously after three seconds flashing the indication lamp.
4. Turn OFF ignition switch.
5. Remove shortage resistance from memory clear switch.

Location of the memory clear switch

Location of the memory clear switch (DIAGNOSIS CONNECTOR)

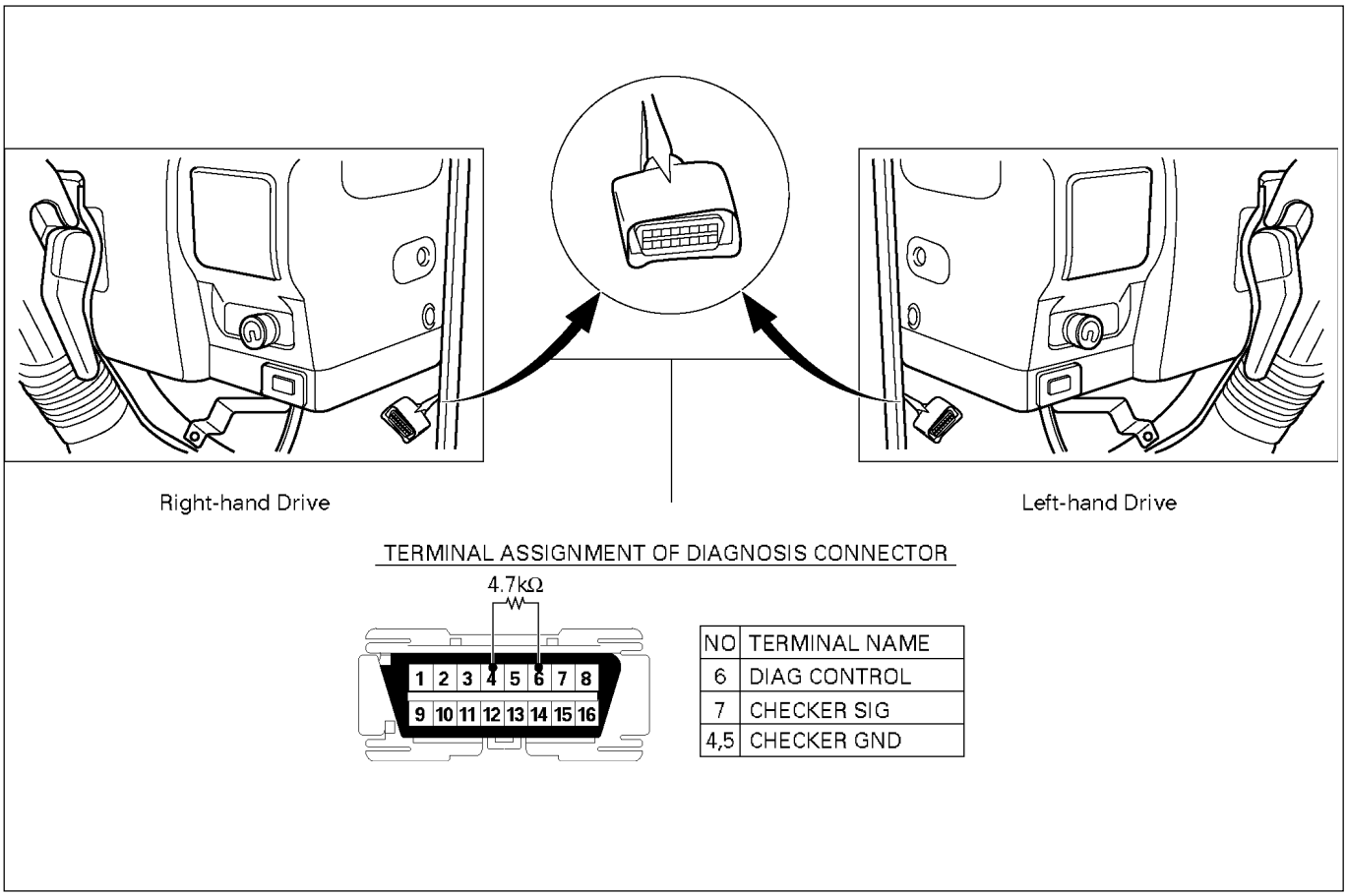

NO	TERMINAL NAME
6	DIAG CONTROL
7	CHECKER SIG
4,5	CHECKER GND

056LX012.tif

How to read flashing of the indicator lamp:

The two-digit diagnosis code flashes starting from ten's figure to indicate the diagnosis code.
Please read the diagnosis code from the flashing.
If the plural diagnosis codes are indicated, the same diagnosis code is flashed repeatedly in steps of three times.
Please read it correctly.

- Diagnostic Trouble Code (DTC) outputting is done in decreasingly order of DTC number.
- Indication is changed over on completion of output DTC indication.
- DTC indicator is stopped with diagnostic switch being off.
- When there is no DTC output, -12+ is outputted in normal DTC code.
- After indicating 3 times pear 1 DTC, shift is conducted to the next DTC. (After making a round, the indications are repeated again.)
- In case of the same diagnostic code, it is used 1 DTC (3 times indication.)

Example Diagnosis Trouble Code Output

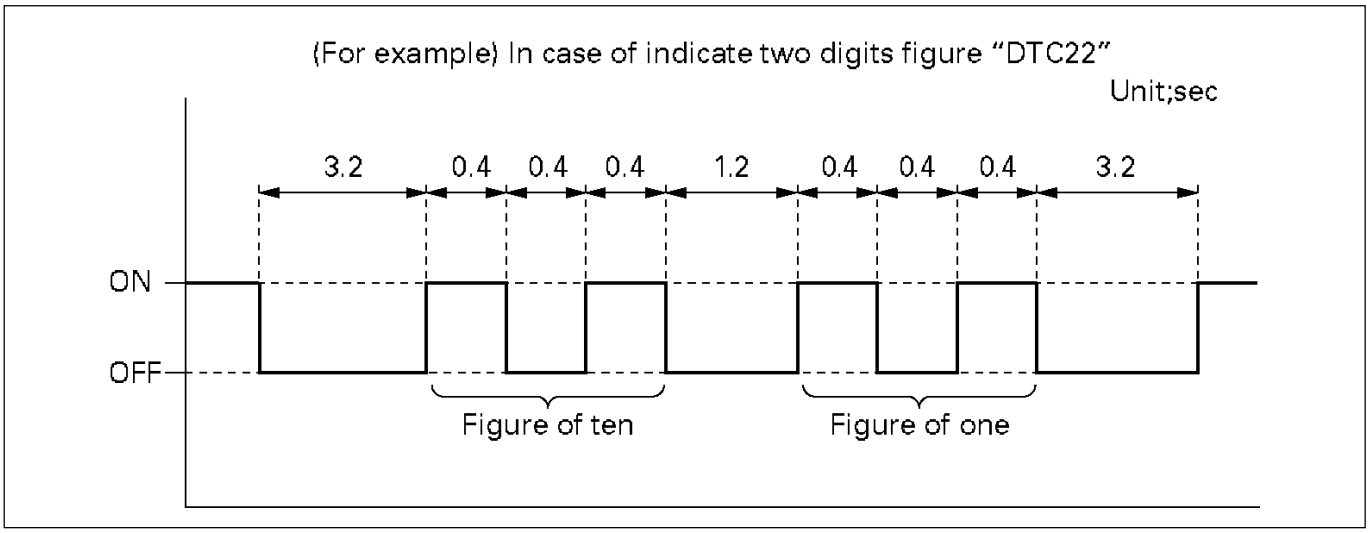

826LX001.tif

Flashing of Indicator Lamp

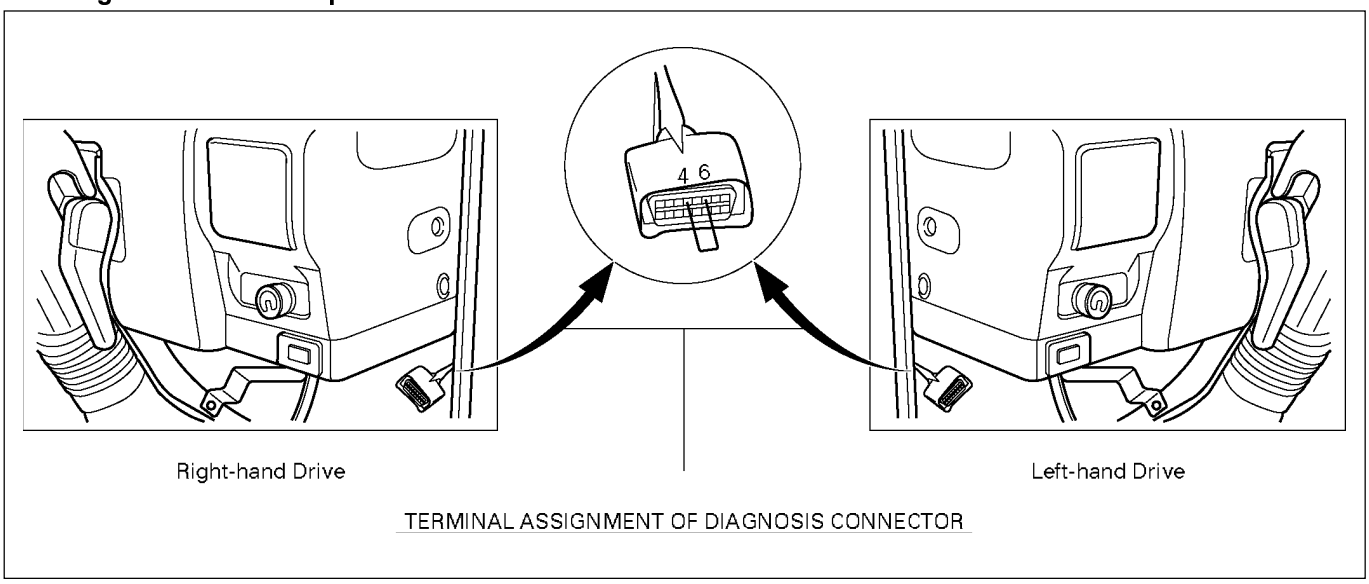

056LX011.tif

DIAGNOSIS TROUBLE CODE (DTC) LIST

DTC#	TECH 2 STRING
21	Rack Sensor Circuit Low Voltage
22	Rack Sensor Circuit High Voltage
13	Engine Coolant Temperature (ECT) Sensor Circuit High Voltage
14	ECT Sensor Circuit Low Voltage
31	Exhaust Gas Recirculation (EGR) Vacuum Switching Valve (VSV) Solenoid Circuit Low Voltage
32	EGR VSV Solenoid Circuit High Voltage
52	Electronically Erasable Programmable Read Only Memory (EEPROM) Error

Error Classified		Trouble Code	Diagnostic Condition	Return Conditi	Back Up	Judging Time
Normal		12	No other trouble code.		No history of this diagnosis recorded	-
Rack Sensor	Harness Open GND short	21	Rack Voltage 0.3V or lower, Engine speed 600~900rpm, and water Temp. 0°C or higher are detected for 3 sec running.	When forward normal	VSV: EGR Output stop. Rack Learning valve: 0	3.52 sec
Rack Sensor	+5V short Rack Sensor Power Voltage	22	5V or higher Rack Voltage detected.			0.52 sec
Water Temp Sensor	Harness Open +B short	13	-79°C (390kΩ) or lower, or 120°C (115kΩ) or higher detected.	When forward normal	VSV: EGR Output stop.	0.52 sec
Water Temp Sensor	GND short	14				
VSV: EGR	Harness Open GND short	* 31	Output TR Monitor	When forward normal	VSV: EGR Output stop.	1.57 sec
VSV: EGR	+B short	* 32				
	ECM EEPROM error	52	Check when ECM is started and when Trouble Code is written.	When forward normal	Trouble Code other than 52 (EEPROM error) not indicated.	

LOCATION OF SENSOR AND SWITCH

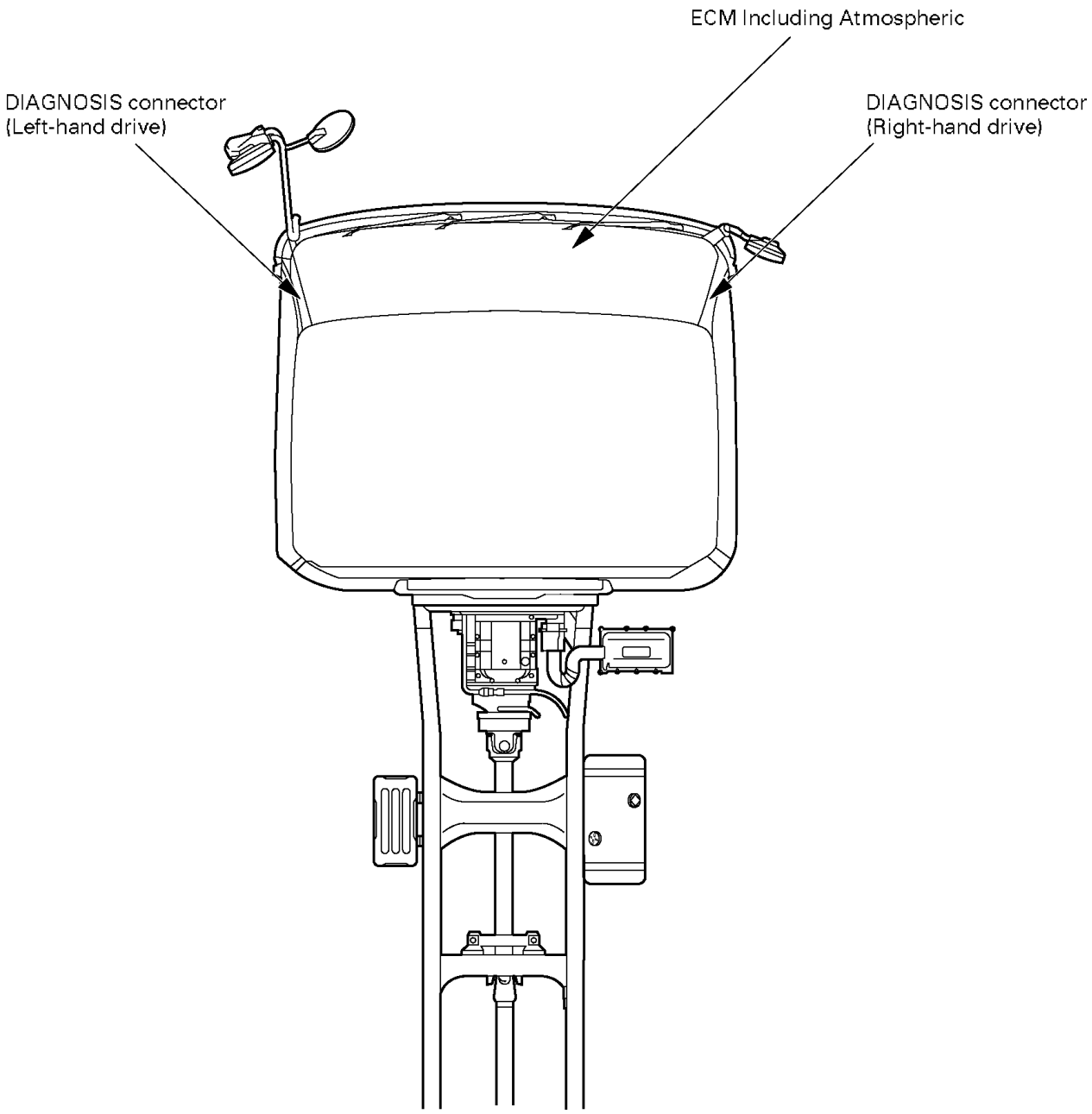

056LX004.tif

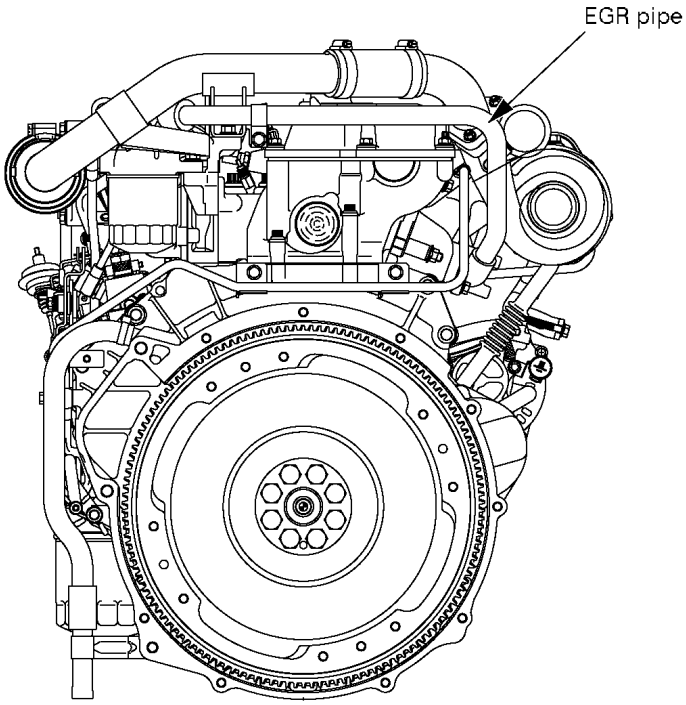

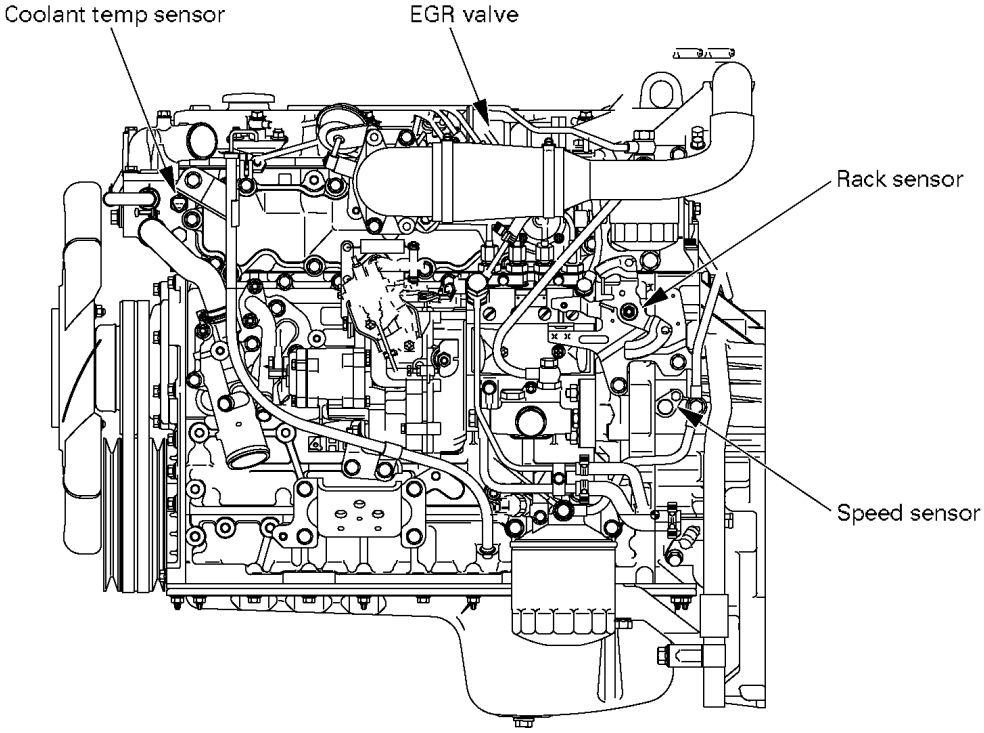

056LX005.tif

PARTS LOCATION

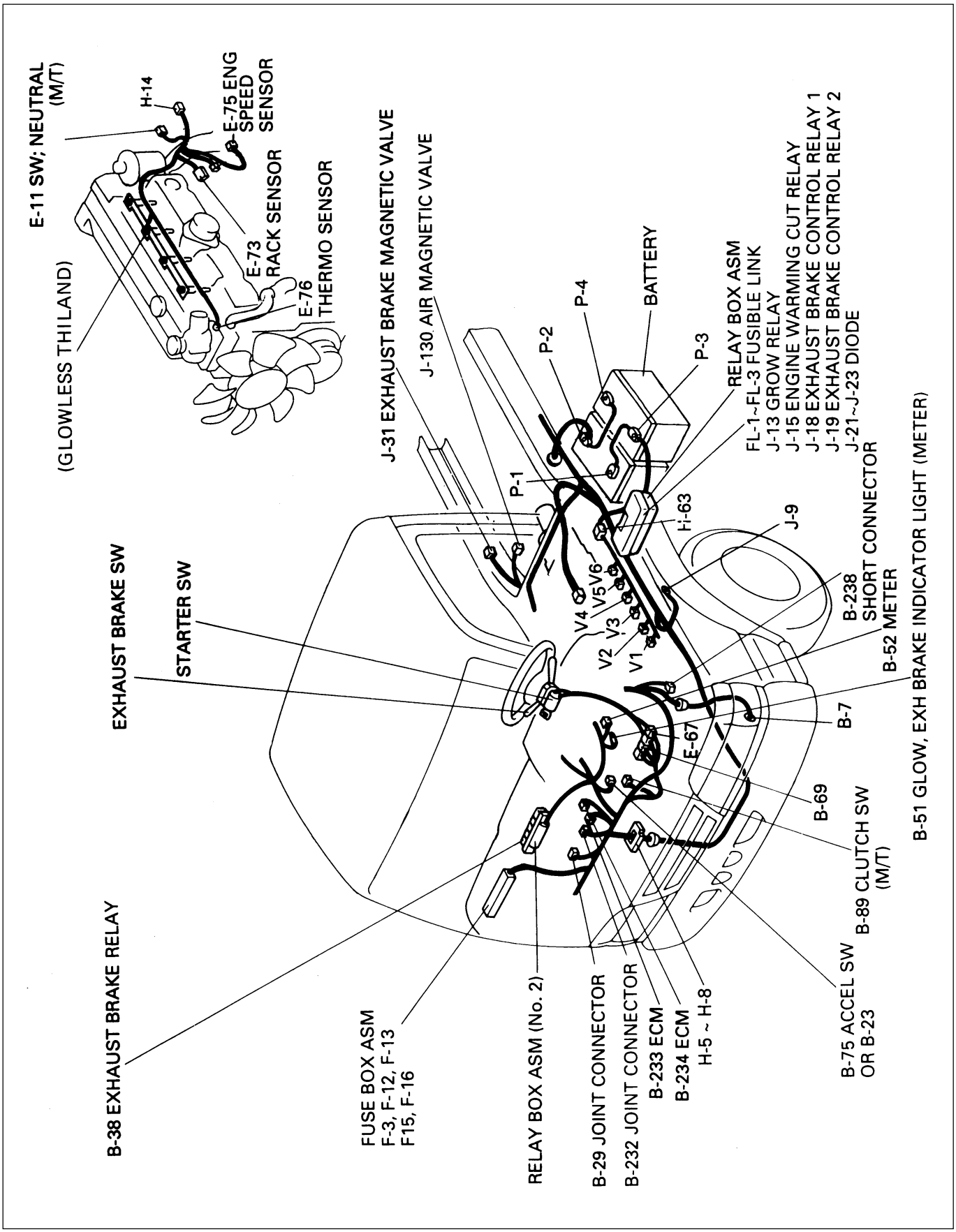

6E-153-1.tif

ENGINE CONTROL MODULE (ECM)

Appearance of ECM

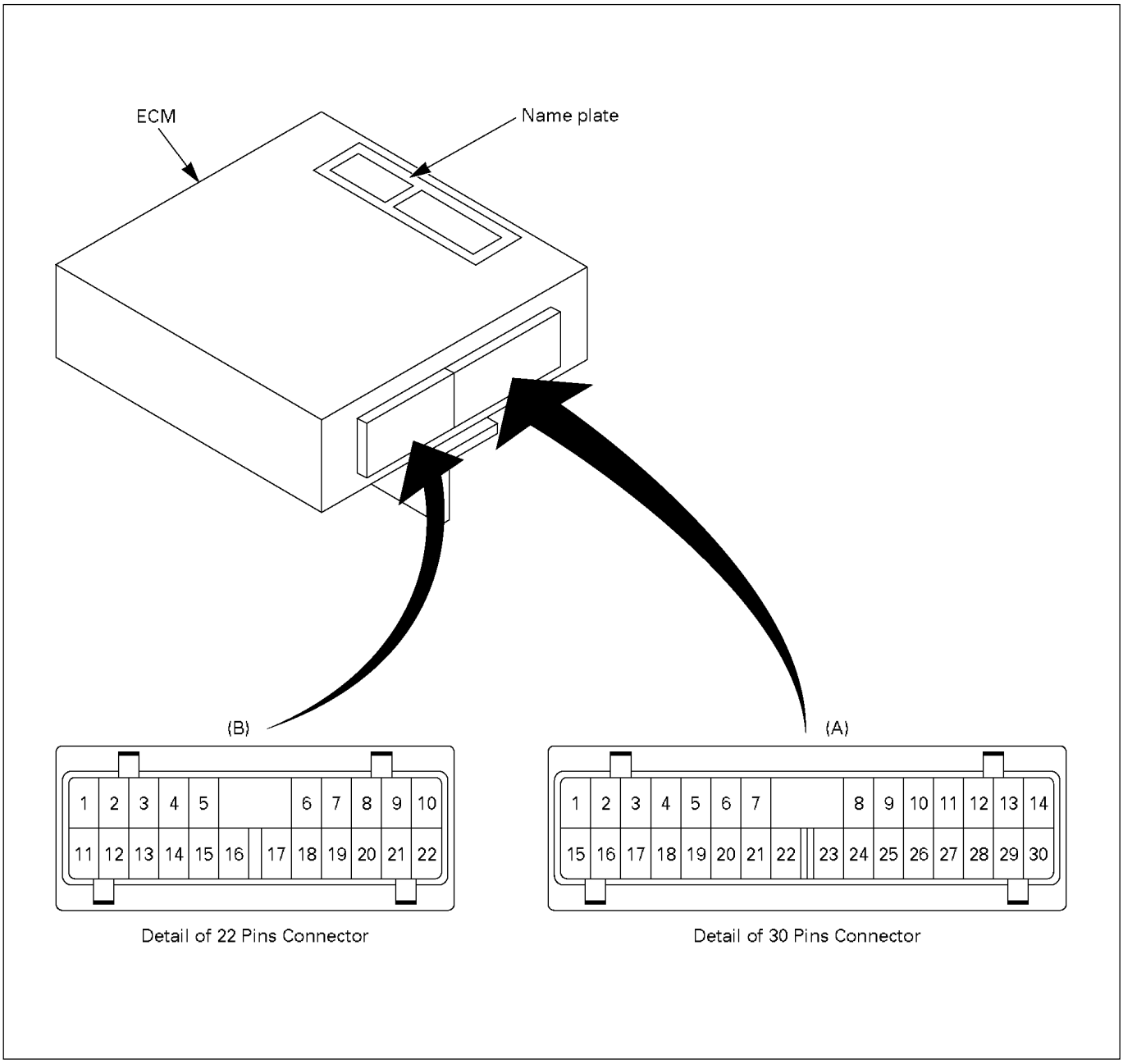

826LW006-1.tif

CHART OF ENGINE CONTROL MODULE (ECM) INPUT/OUTPUT

Connector number	Connector name
A-1	CHECKER
A-2	Not used
A-3	QOS (W/Glow only)
A-4	Not used
A-5	Not used
A-6	RACK+
A-7	RACK SIG
A-8	BATTERY
A-9	IGKBY
A-10	Not used
A-11	Not used
A-12	Not used
A-13	Not used
A-14	Not used
A-15	CHECKER GND
A-16	DIAG
A-17	Not used
A-18	Not used
A-19	Not used
A-20	Not used
A-21	RACK-
A-22	GND
A-23	Not used
A-24	Not used
A-25	Not used
A-26	Not used
A-27	Not used
A-28	Not used
A-29	Not used
A-30	Not used

Connector number	Connector name
B-1	VSV : EGR
B-2	GLOW RELAY
B-3	GLOW IND LAMP
B-4	Not used
B-5	Not used
B-6	Not used
B-7	THERMO -
B-8	THERMO +
B-9	ENGINE -
B-10	ENGINE +
B-11	Not used
B-12	Not used
B13	Not used
B-14	Not used
B-15	Not used
B-16	Not used
B-17	Not used
B-18	STARTER
B-19	EXH BRAKE
B-20	Not used
B-21	Not used
B-22	Not used

LOCATION OF THE ENGINE CONTROL MODULE (ECM) CONNECTOR

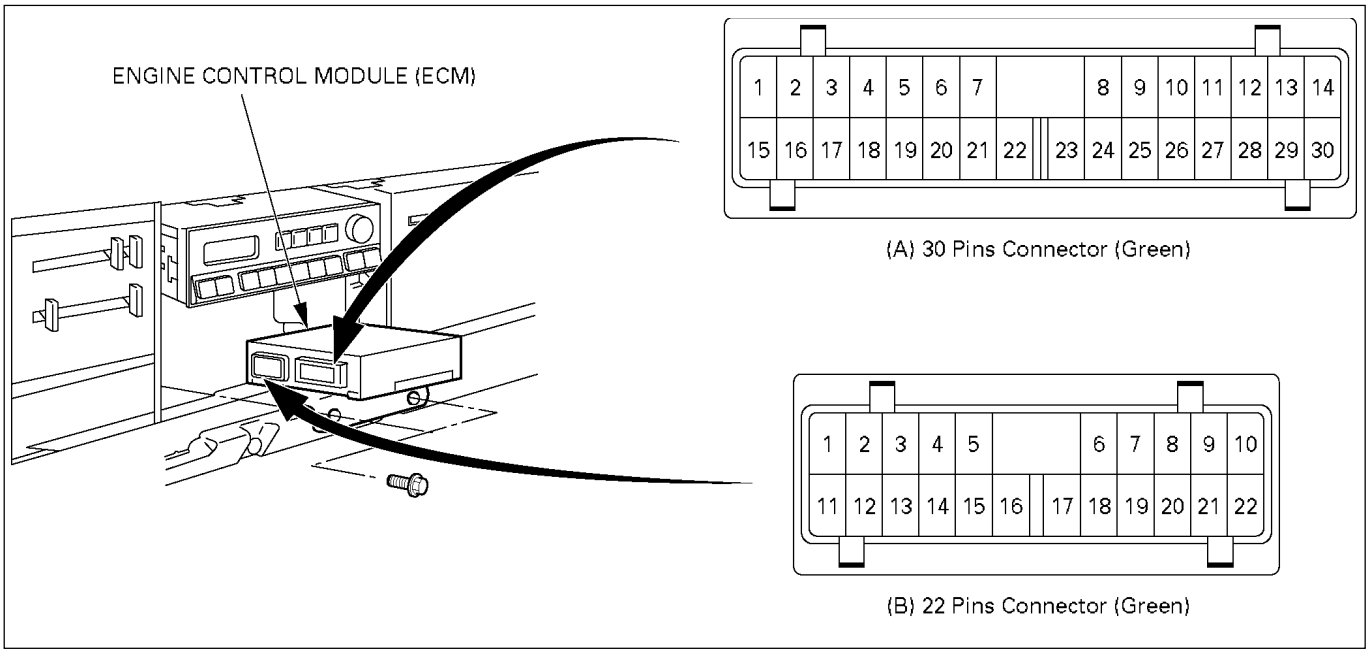

826LW008-1.tif

LOCATION OF DATA LINK CONNECTOR (DLC)

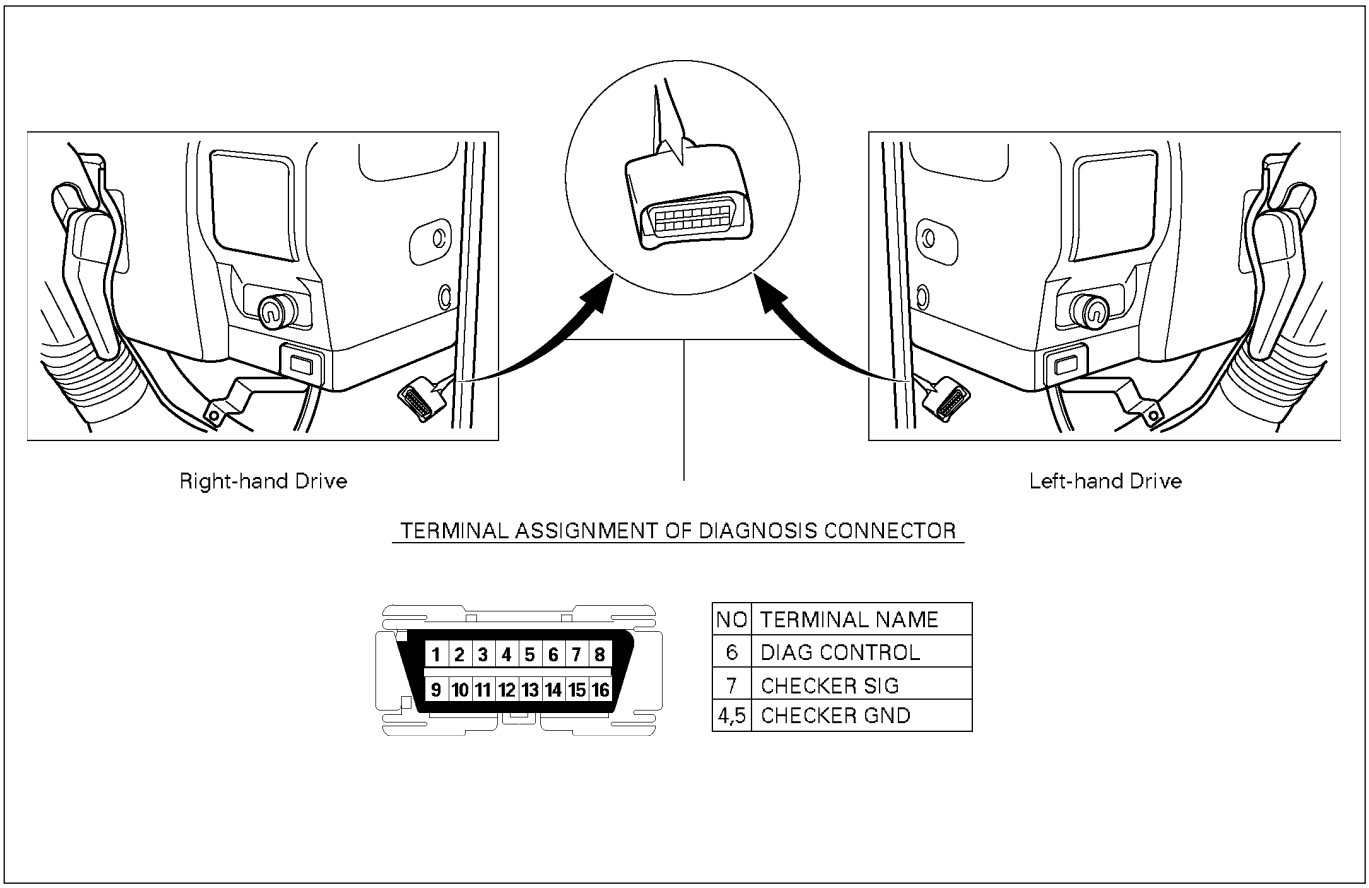

NO	TERMINAL NAME
6	DIAG CONTROL
7	CHECKER SIG
4,5	CHECKER GND

056LX013.tif

ENGINE CONTROL MODULE (ECM) SYSTEM WIRING DIAGRAM

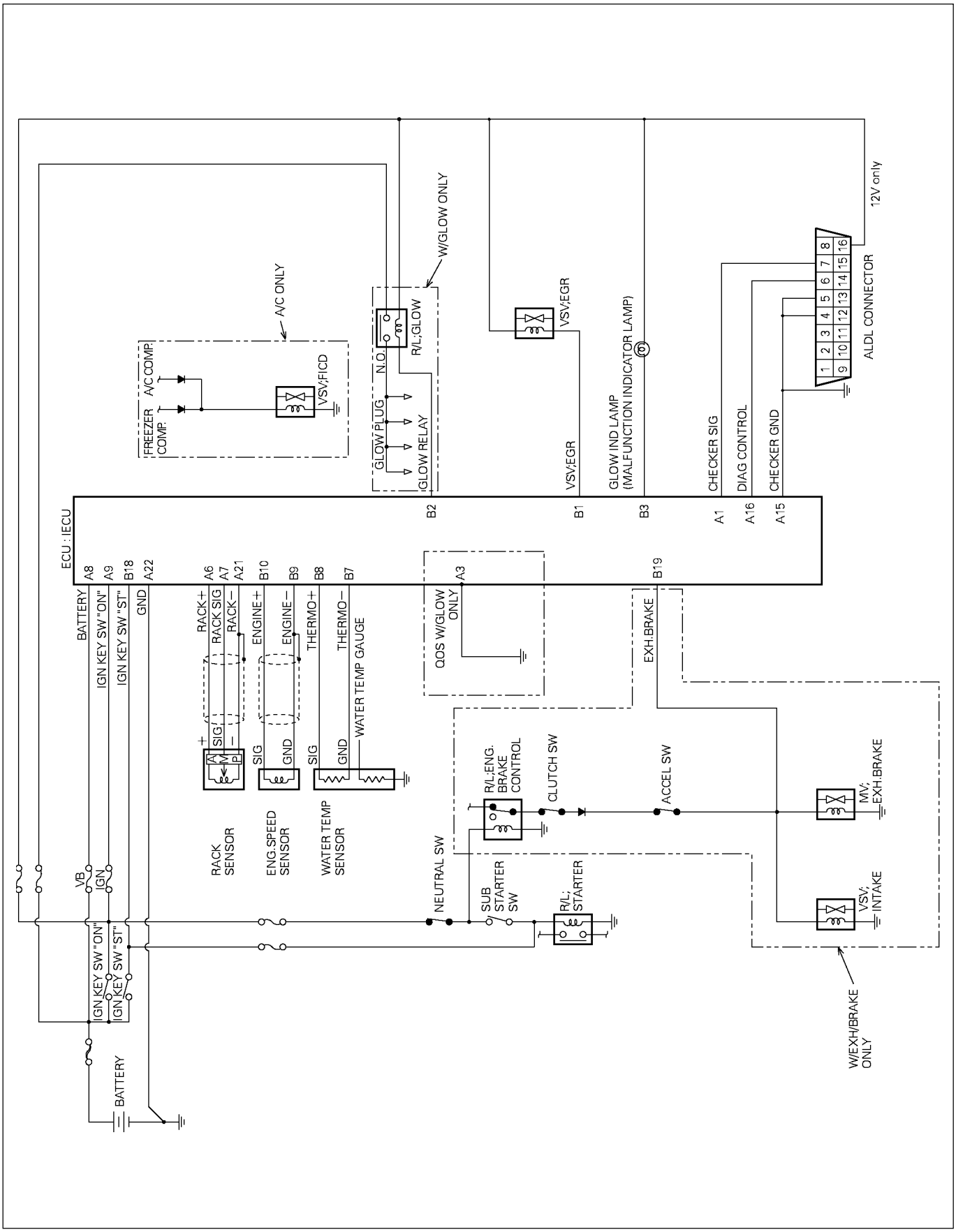

826LX003.tif

AUXILIARY ENGINE CONTROL SYSTEM (Equipped with Exhaust gas recirculation (EGR))

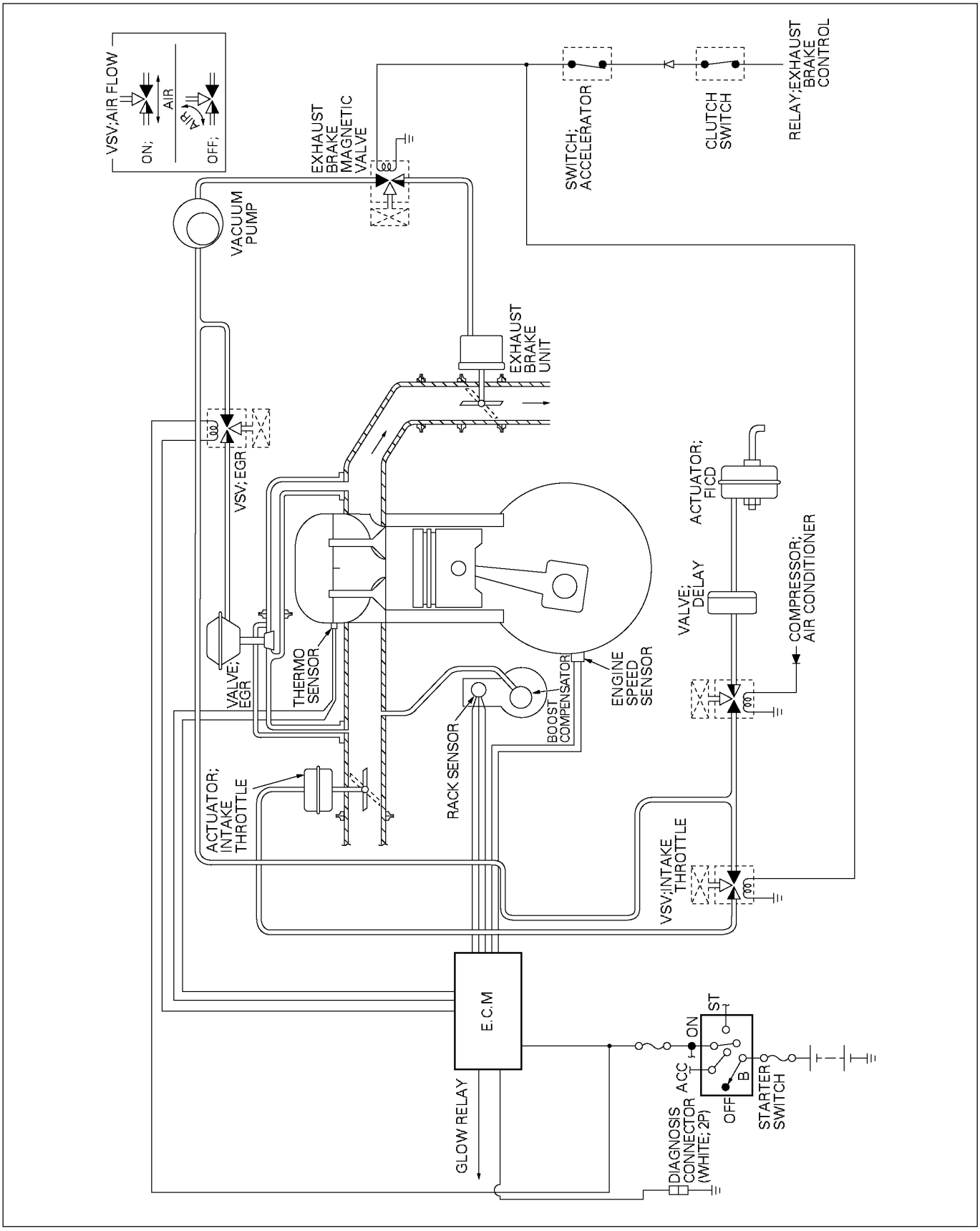

056LX003.tif

VACUUM SWITCHING VALVE (VSV) CIRCUIT (Equipped with Exhaust gas recirculation (EGR))

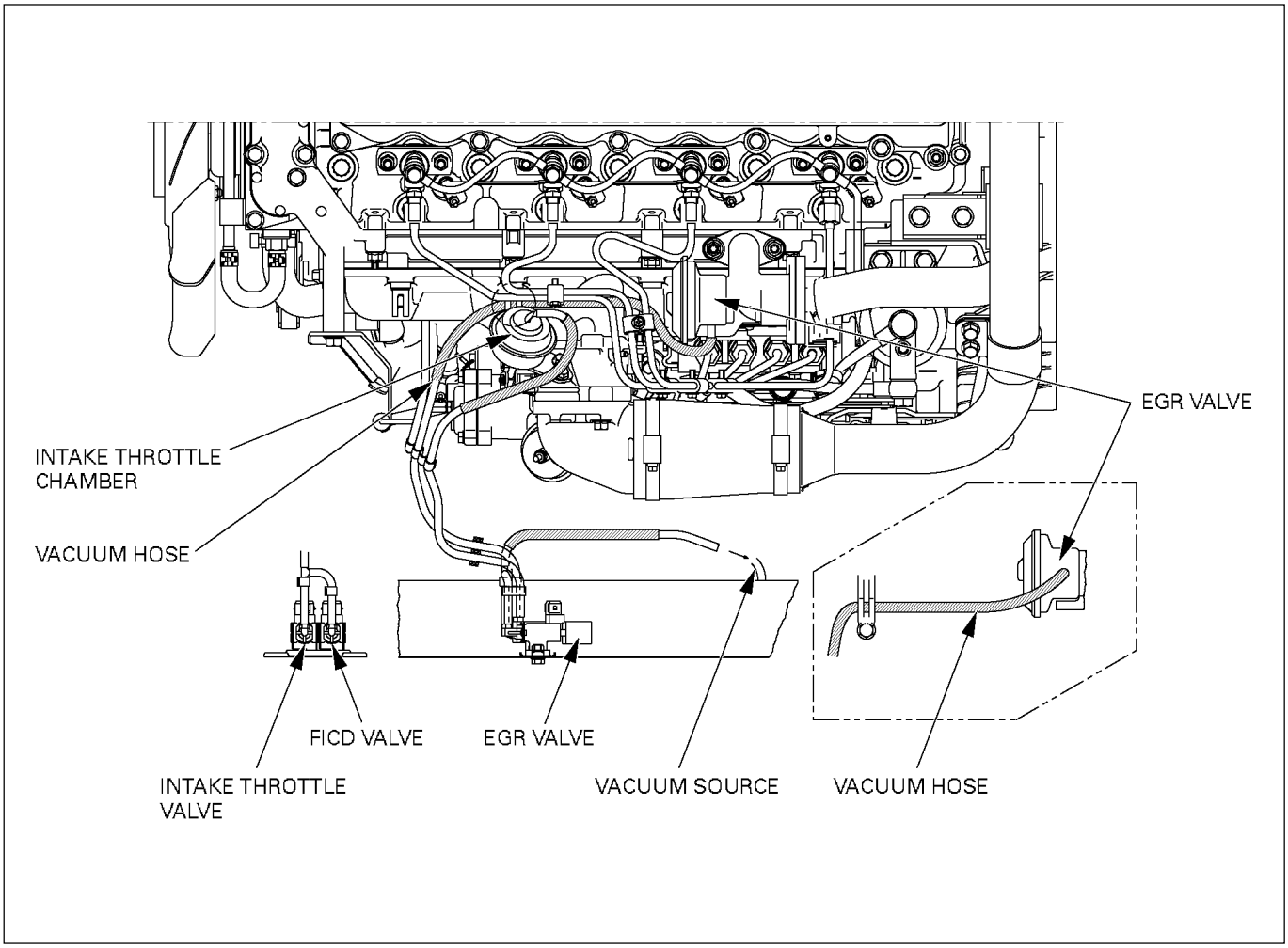

028LX001.tif

EXHAUST BRAKE CONTROL

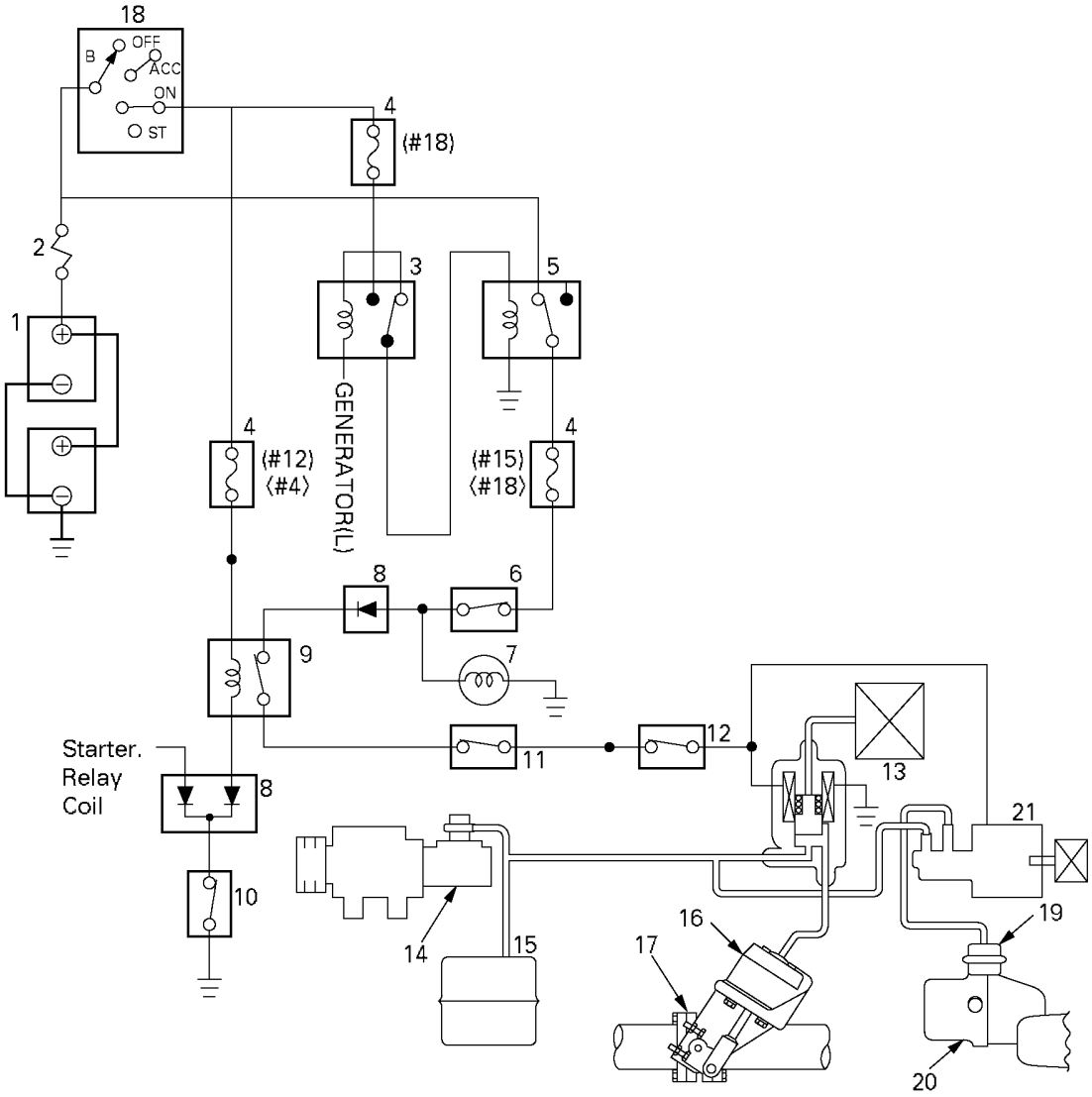

1. Batteries
2. Fusible Link Wire
3. Charge Relay
4. Fuse
5. Exhaust Brake Relay
6. Exhaust Brake Switch
7. Indicator Light
8. Diode
9. Exhaust Brake Control Relay
10. Neutral Switch
11. Clutch Switch (M/T only)
12. Accelerator Switch
13. Magnetic Valve: Exhaust Brake
14. Vacuum Pump
15. Vacuum Tank
16. Vacuum Chamber: Exhaust Brake
17. Exhaust Brake Valve
18. Key Switch
19. Vacuum Chamber: Intake Throttle
20. Intake Throttle
21. Magnetic Valve Intake Throttle

052LX001.tif

DTC-13 ENGINE COOLANT TEMPERATURE (ECT) SENSOR CIRCUIT HIGH VOLTAGE

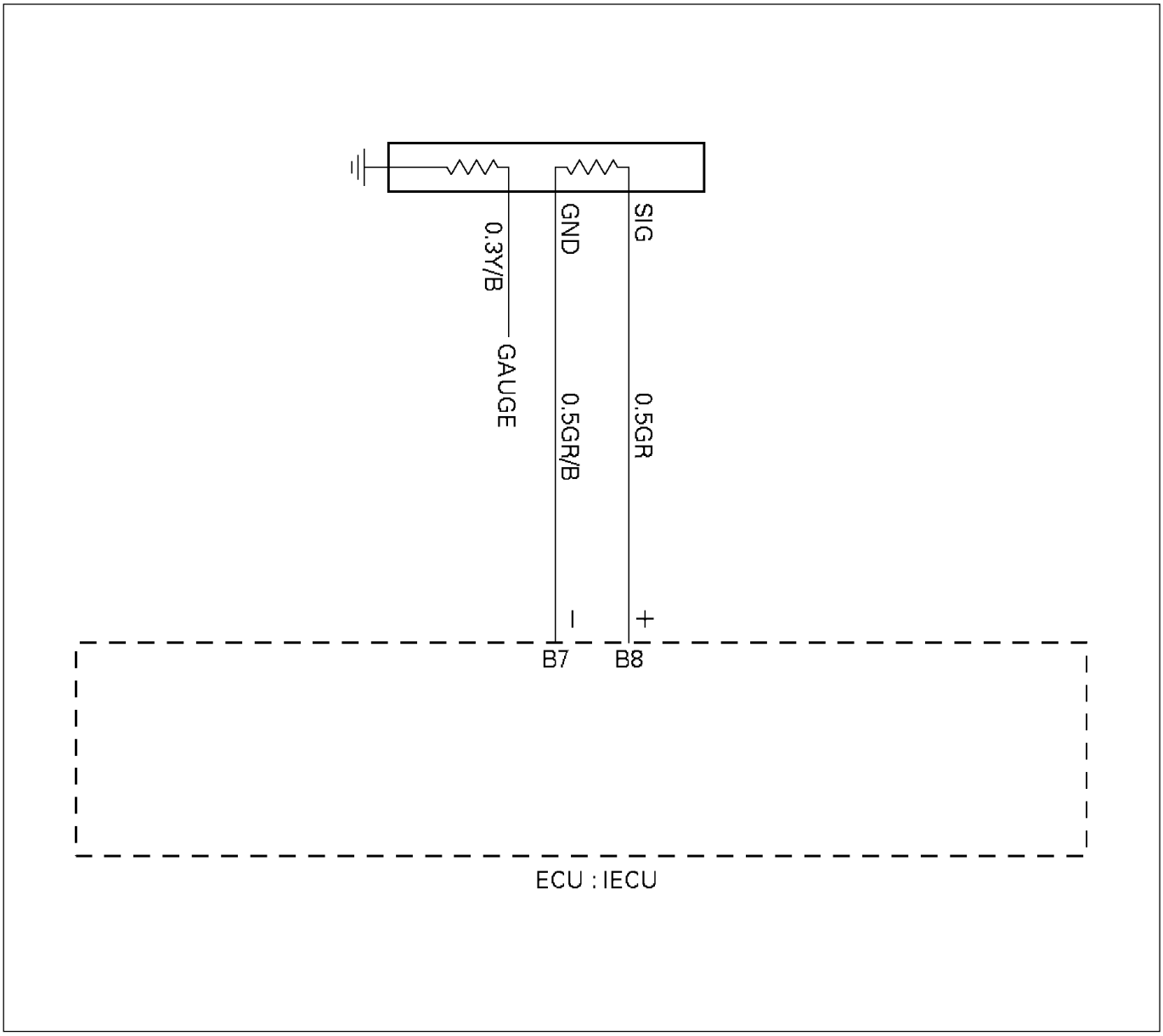

826LX004.tif

Appearance of water temperature sensor and connector pin assignment.

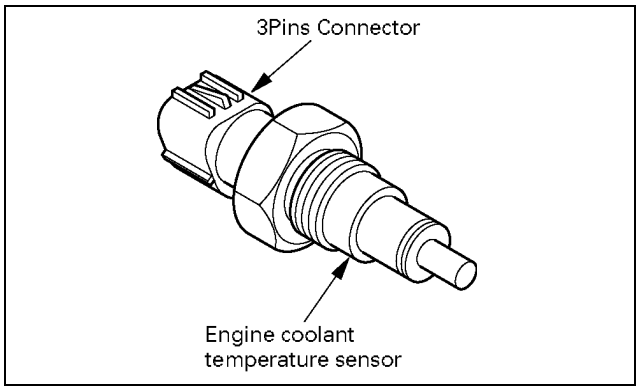

056LW017.tif

Figure. Temperature sensor

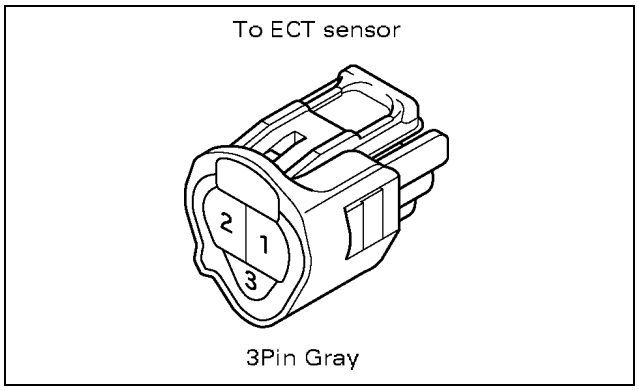

056LW012.tif

Figure. Connector pin assignment

Connector No	Signal
1	Thermistor for engine
2	Thermistor for engine
3	Thermistor for meter

Measure resistance at Engine Coolant Temperature (ECT) sensor

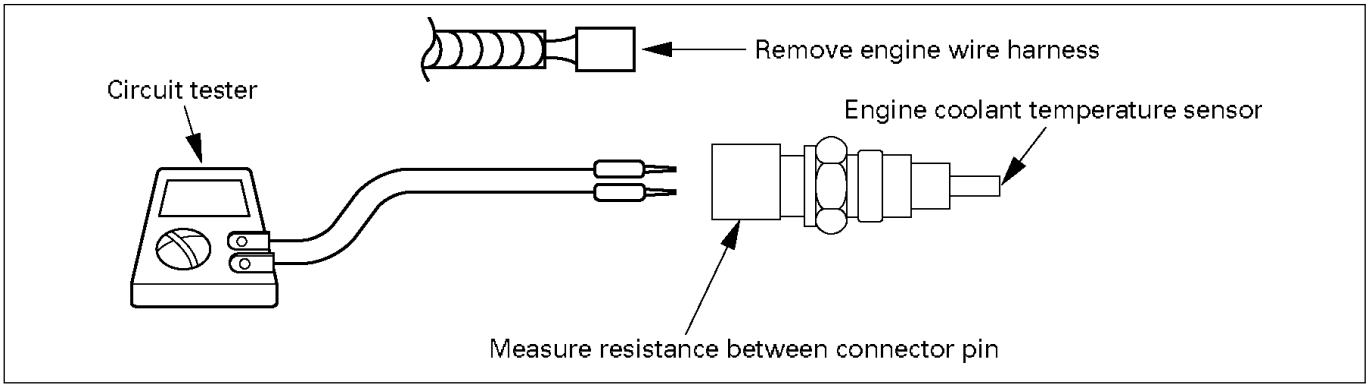

056LW023.tif

CAUTION:

When measuring resistance with a circuit tester, be careful not to damage or deform the terminals.

Resistance value

Inspection Point		Resistance Value	Temperature on sensor	Reference
Connector	Pin No.			
3 pin Black	1 ←→ 3	∞	-	Thermistor for ENGINE ←→ Thermistor for meter
	1 ←→ 2	2.5 (kΩ)	20 (°C)	Thermistor for ENGINE
		247 (Ω)	90 (°C)	
	1 ←→ Body	∞	-	Thermistor for ENGINE ←→ Body
	2 ←→ 3	∞	-	Thermistor for ENGINE ←→ Thermistor for meter
	3 ←→ Body	146.6 (Ω)	60 (°C)	Thermistor for meter ENGINE
	2 ←→ Body	∞	-	Thermistor for ECM ←→ Body

Note: Resistance value is difference according to the temperature of temperature sensor.

Step	Action	Value (s)	Yes	No
1	Was the “Diagnostic system check” performed?	-	Go to Step 2	Go to self diagnostic system check
2	1. Ignition “OFF” 2. Disconnect ECT sensor electrical connector. 3. Jumper the ECT sensor signal circuit and the ECT sensor ground circuit together at the ECT sensor harness connector. 4. Does indicate DTC 14?	-	Go to Step 4	Go to Step 3
3	1. Ignition “OFF” 2. Jumper the ECT signal circuit at the ECT sensor harness connector to chassis ground. 3. Does indicate DTC 14?	-	Go to Step 5	Go to Step 6
4	Check four poor connection at the ECT sensor and replace terminals if necessary. Did any terminals require replacement?	-	Go to Step 10	Go to Step 8
5	1. Ignition “OFF”. 2. Disconnect the ECM, and check the ECT sensor ground circuit for an open. 3. If the ECT sensor ground circuit is open, repair it as necessary. Was the ECT sensor ground circuit open?	-	Go to Step 10	Go to Step 7
6	1. Ignition “OFF”. 2. Disconnect the ECM, and check the ECT sensor signal circuit for an open. 3. If the ECT signal circuit is open, repair it as necessary. Was the ECT sensor signal circuit open?	-	Go to Step 10	Go to Step 7
7	Check for poor sensor ground or ECT sensor signal circuit terminal connection at the ECU and replace terminal(s) if necessary. Did any of the terminals need to be replaced?	-	Go to Step 10	Go to Step 9
8	1. Ignition “OFF” 2. Replace the ECT Sensor. Is the action complete?	-	Go to Step 10	-
9	1. Replace the ECM. Is the action complete?	-	Go to Step 10	-
10	1. Reconnect all the connectors removed. 2. Ignition “ON”, Engine “OFF” Does DTC 13 come normal condition?	-	Go to Step 11	Go to Step 2
11	Is any current trouble other than DTC 13 displayed by indicator light?	-	Go to trouble code section	Trouble code clear

DTC-14 ENGINE COOLANT TEMPERATURE (ECT) SENSOR CIRCUIT LOW VOLTAGE

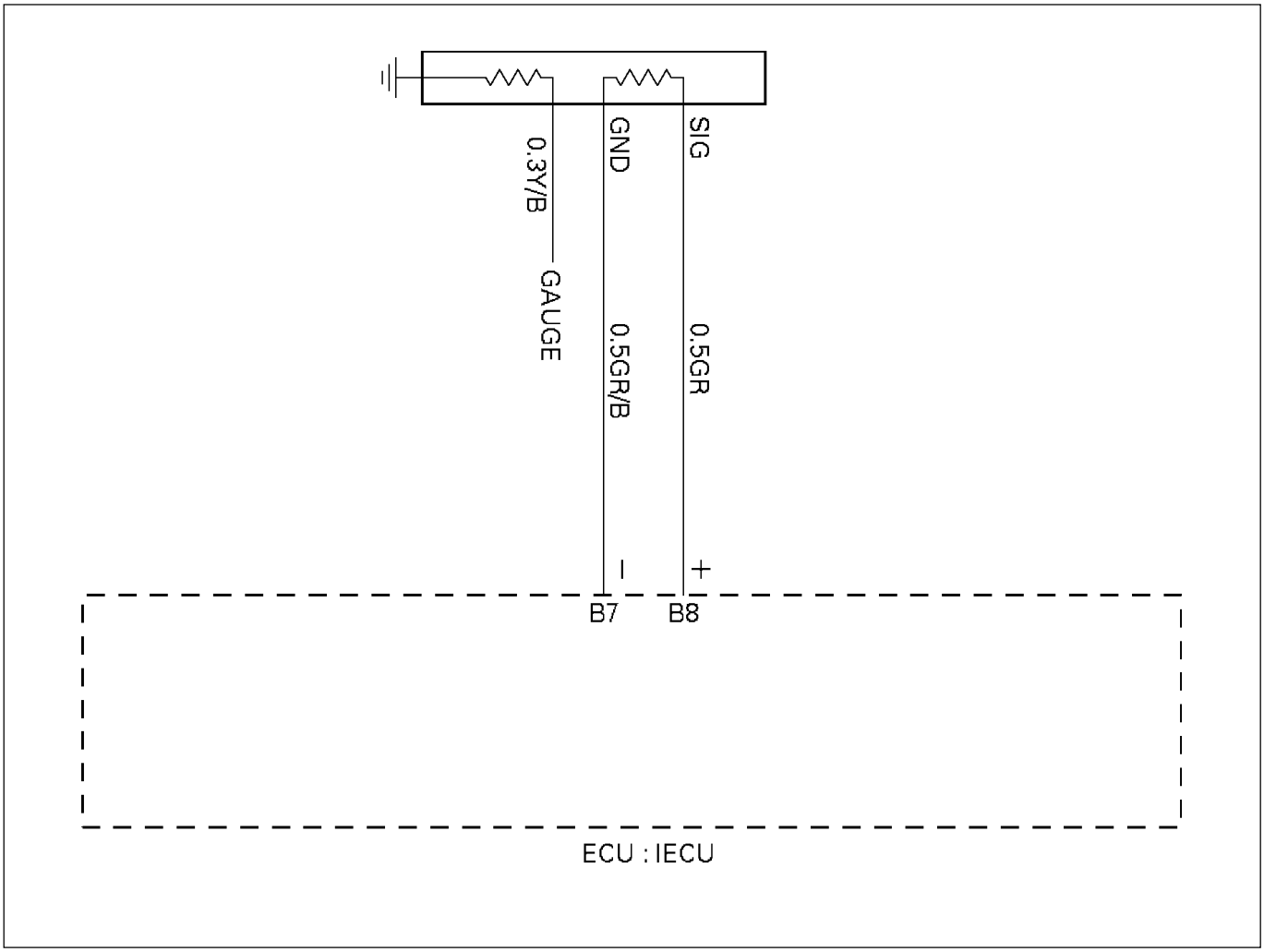

826LX004.tif

Appearance of water temperature sensor and connector pin assignment.

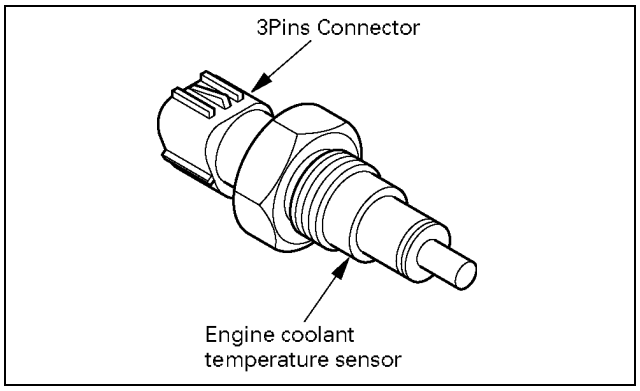

056LW017.tif

Figure. Temperature sensor

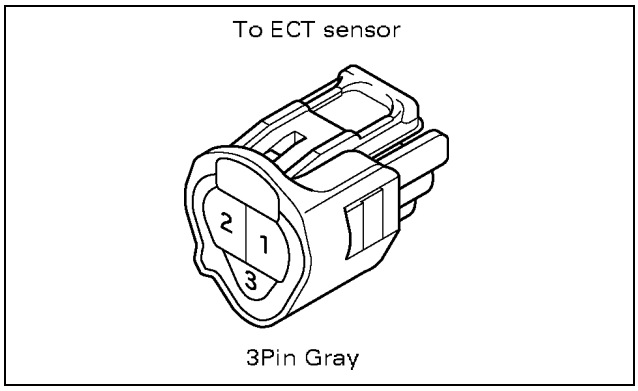

056LW012.tif

Figure. Connector pin assignment

Connector No	Signal
1	Thermistor for engine
2	Thermistor for engine
3	Thermistor for meter

Measure resistance at Engine Coolant Temperature (ECT) sensor

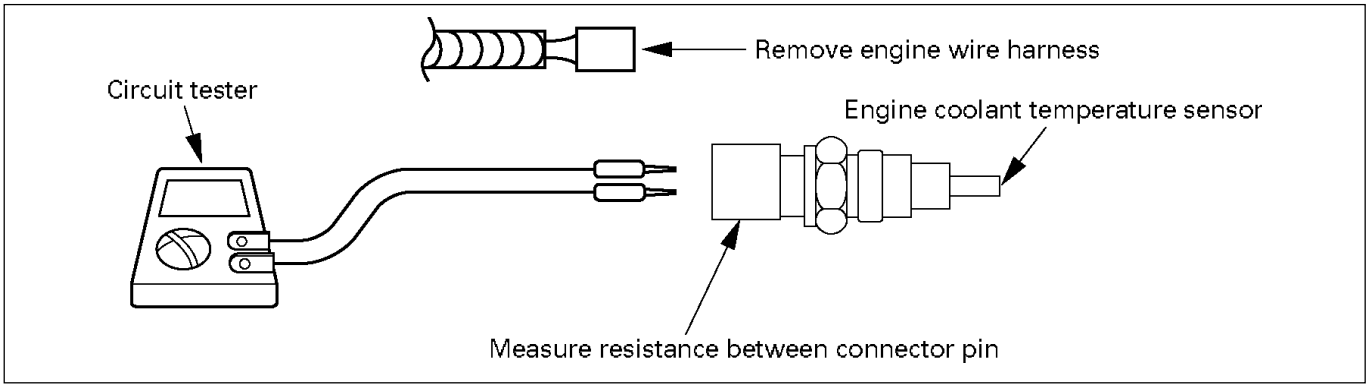

056LW023.tif

CAUTION:

When measuring resistance with a circuit tester, be careful not to damage or deform the terminals.

Resistance value

Inspection Point		Resistance Value	Temperature on sensor	Reference
Connector	Pin No.			
3 pin Black	1 ←→ 3	∞	-	Thermistor for ENGINE ←→ Thermistor for meter
	1 ←→ 2	2.5 (kΩ)	20 (°C)	Thermistor for ENGINE
		247 (Ω)	90 (°C)	
	1 ←→ Body	∞	-	Thermistor for ENGINE ←→ Body
	2 ←→ 3	∞	-	Thermistor for ENGINE ←→ Thermistor for meter
	3 ←→ Body	146.6 (Ω)	60 (°C)	Thermistor for meter ENGINE
	2 ←→ Body	∞	-	Thermistor for ECM ←→ Body

Note: Resistance value is difference according to the temperature of temperature sensor.

Step	Action	Value (s)	Yes	No
1	Was the “Diagnostic system check” performed?	-	Go to Step 2	Go to self diagnostic system check
2	1. Memory DTC to ECM. 2. Clear DTC 3. Ignition “OFF” 4. Disconnect the ECT sensor. 5. Ignition “ON”, Engine “OFF” 6. Does indicate DTC 14? (Ignore DTC 13)	-	Go to Step 3	Go to Step 6
3	1. Ignition “OFF” 2. Check Connector ECT Sensor Harness for interterminal short. 3. Repair if necessary. Was ECT Sensor connector shorted?	-	Go to Step 8	Go to Step 4
4	1. Ignition “OFF” 2. Check the ECM connector terminal short? 3. Repair if necessary. Was ECM terminal shorted?	-	Go to Step 8	Go to Step 5
5	1. Disconnect the ECM. 2. Check if ECT sensor signal circuit for a short to ground or a short to ground circuit. 3. Repair if necessary. Is ECT sensor signal circuit shorted to ground.	-	Go to Step 8	Go to Step 7
6	1. Ignition “OFF” 2. Replace the ECT Sensor. Is the action complete?	-	Go to Step 8	-
7	1. Replace the ECM. Is the action complete?	-	Go to Step 8	-
8	1. Reconnect all the connectors removed. 2. Ignition “ON”, Engine “OFF” Does DTC 13 come normal condition?	-	Go to Step 9	Go to Step 2
9	Is any current trouble other than DTC 14 displayed by indicator light?	-	Go to trouble code section	Trouble code clear

DTC-21 RACK SENSOR CIRCUIT LOW VOLTAGE

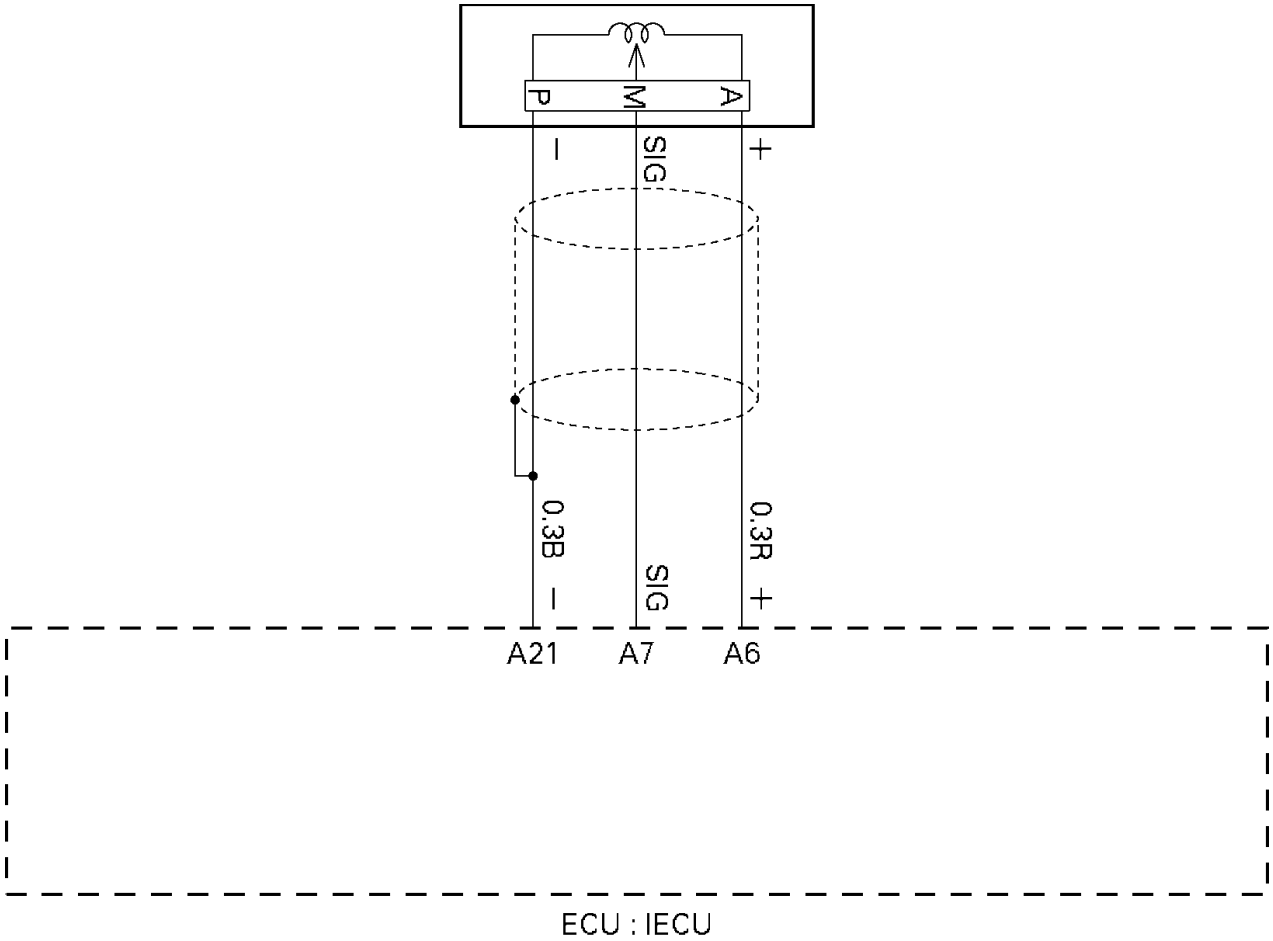

826LX005.tif

Location of Rack sensor connector

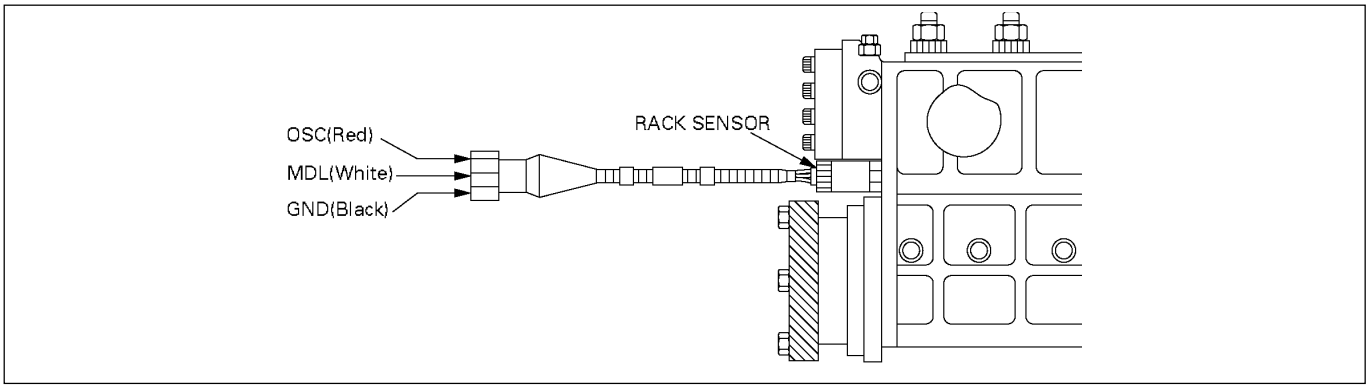

040LW032.tif

Connector name of Rack sensor

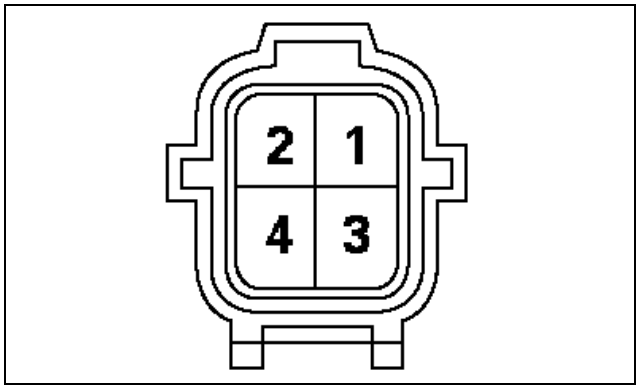

4-16-1.tif

NOTE: Mark "___" on connector which is plugged, therefore, should be confirmed to be played.

Relation between connector number and signal name

Connector No.	Signal name	Wire color
1	Rack sensor (OSC)	R
2	Rack sensor (GND)	W
4	Rack sensor (MDL)	B

Step	Action	Value (s)	Yes	No
1	Was the “Diagnostic system check” performed?	-	Go to Step 2	Go to diagnostic system check
2	1. Check harness side power source circuit and signal circuit for GND short. 2. Repair if necessary. 3. Has DTC21 been corrected?	-	Go to Step 10	Go to Step 3
3	Disconnect Sensor Connector. Jumper RACK+ and RACK sig. Free from trouble now? Ignore code 22.	-	Go to Step 4	Go to Step 6
4	1. Apply 5V to RACK+ TERMINAL. Measure RACK SIG Voltage. Is RACK SIG VOLTAGE as specified?	0.9-2.0V (Idling speed)	Go to Step 7	Go to Step 5
5	1. Check Rack Sensor Harness Signal Circuit and power source for GND short. Check signal circuit for disconnect. 2. Repair if necessary. 3. Free from trouble now?	-	Go to Step 10	Go to Step 7
6	1. Check harness signal circuit and power source circuit for disconnect. 2. Repair if necessary. 3. Free from trouble now?	-	Go to Step 10	Go to Step 9
7	1. Check the iron core of RACK Sensor for damage, seizure, and wear. 2. After check, repair if necessary. Was there any trouble in the iron core (RACK end) inside RACK Sensor?	-	Go to Step 10	Go to Step 8
8	Replaced RACK Sensor?	-	Go to Step 10	-
9	1. Replace the ECM. Is the action complete?	-	Go to Step 10	-
10	1. Reconnect all the connectors removed. 2. Ignition “ON”, Engine “OFF” Is DTC 21 all right under Scan Tool Check?	-	Go to Step 10	Go to Step 2
11	Is any current trouble other than DTC 21 displayed by scan tool?	-	Go to trouble code section	Trouble code clear

DTC-22 RACK SENSOR CIRCUIT HIGH VOLTAGE

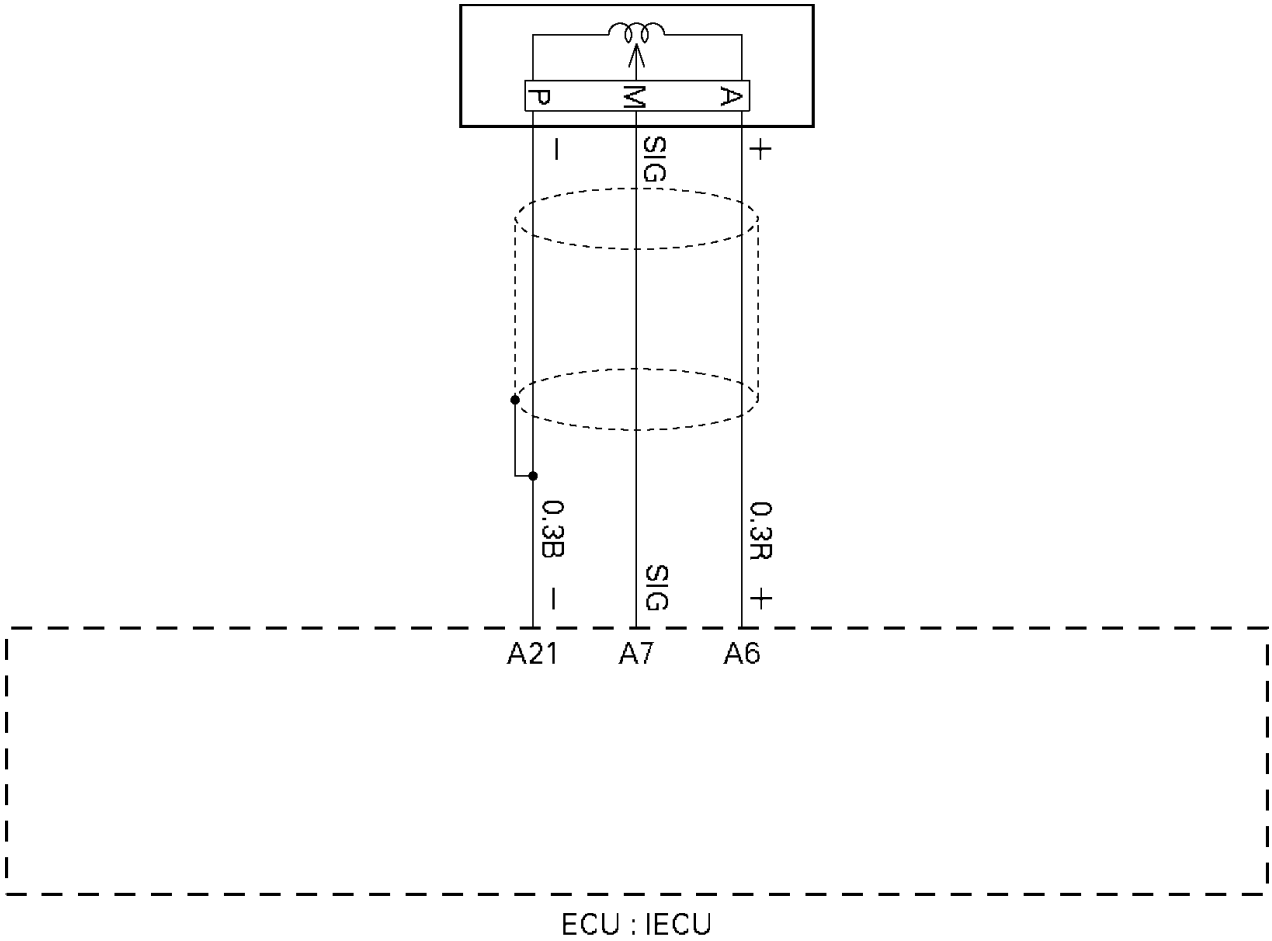

826LX005.tif

Location of Rack sensor connector

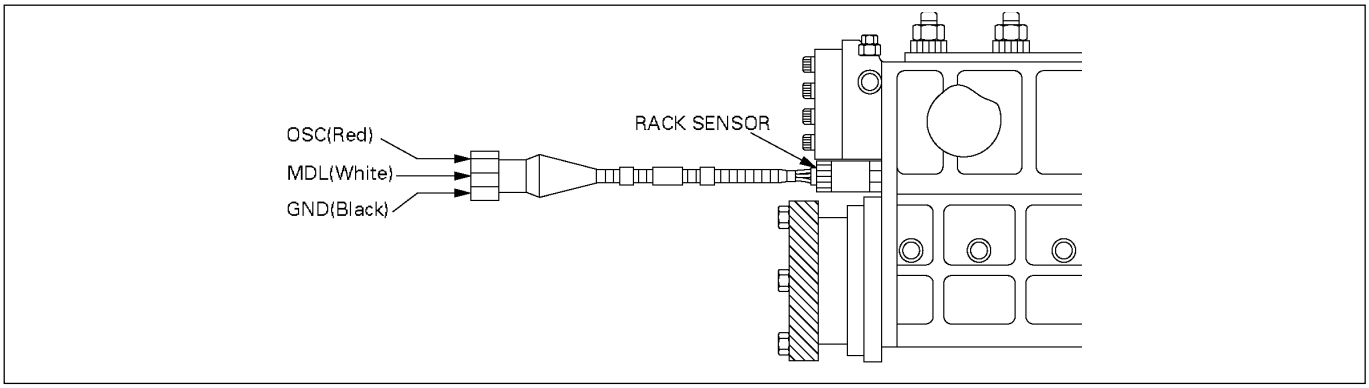

040LW032.tif

Connector name of Rack sensor

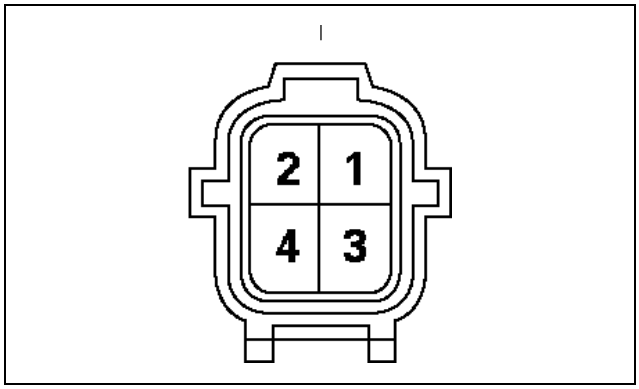

4-16.tif

NOTE: Mark "___" on connector which is plugged, therefore, should be confirmed to be played.

Relation between connector number and signal name

Connector No.	Signal name	Wire color
1	Rack sensor (OSC)	R
2	Rack sensor (GND)	B
4	Rack sensor (MDL)	W

Step	Action	Value (s)	Yes	No
1	Was the “Diagnostic system check” performed?	-	Go to Step 2	Go to diagnostic system check
2	Remove Sensor Connector. Has DTC22 been corrected? (Ignore DTC 21)	-	Go to Step 3	Go to Step 7
3	1. Jumper Harness signal Terminal and GND terminal at the Sensor side of Connector. 2. Ignition “ON” Has DTC22 been corrected?	-	Go to Step 4	Go to Step 5
4	1. Check Sensor Connector for inter terminal short. After check, repair if necessary. Was Connector Terminal shorted?	-	Go to Step 12	Go to Step 6
5	1. Check GND Circuit for disconnect. After check, repair if necessary. Is GND circuit disconnect?	-	Go to Step 12	Go to Step 11
6	1. Check Sensor Harness signal circuit and power source circuit for short. After check, repair if necessary. Was Harness shorted?	-	Go to Step 12	Go to Step 8
7	1. Check Harness signal circuit and power source for short. After check, repair if necessary. Was Harness shorted?	-	Go to Step 12	Go to Step 11
8	1. Apply 5V to RACK+ TERMINAL. 2. Measure RACK SIG Voltage. Is RACK SIG VOLTAGE as specified?	0.9-2.0V (Idling speed)	Go to Step 9	Go to Step 10
9	1. Check the iron core of RACK Sensor for damage, seizure, and wear. 2. After check, repair if necessary. Was there any trouble in the iron core(RACK end) inside RACK Sensor?	-	Go to Step 12	Go to Step 11
10	Replaced sensor. Was Sensor replaced?	-	Go to Step 12	-
11	Replace the ECM. Is the action complete?	-	Go to Step 12	-
12	1. Reconnect all the connectors removed. 2. Ignition “ON”, Engine “OFF” Is DTC22 all right under Scan Tool Check?	-	Go to Step 13	Go to Step 2
13	Is any current trouble other than DTC 22 displayed by indicator light?	-	Go to trouble code section	Trouble code clear

DTC-31 EXHAUST GAS RECIRCULATION (EGR) VACUUM SWITCHING VALVE (VSV) SOLENOID CONTROL LOW VOLTAGE

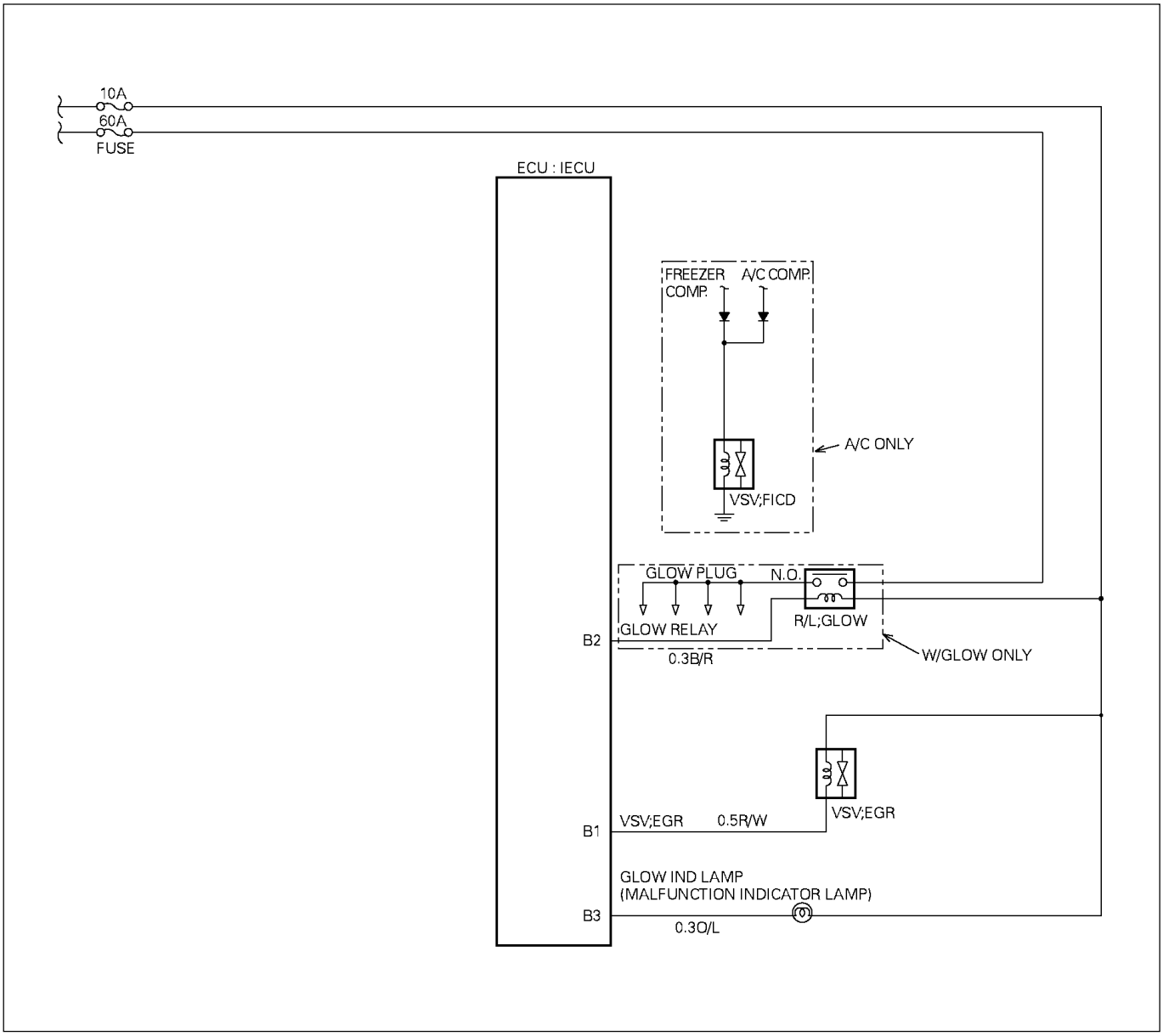

826LX006.tif

Appearance of Vacuum Switching Valve (VSV): Exhaust Gas Recirculation (EGR) connector

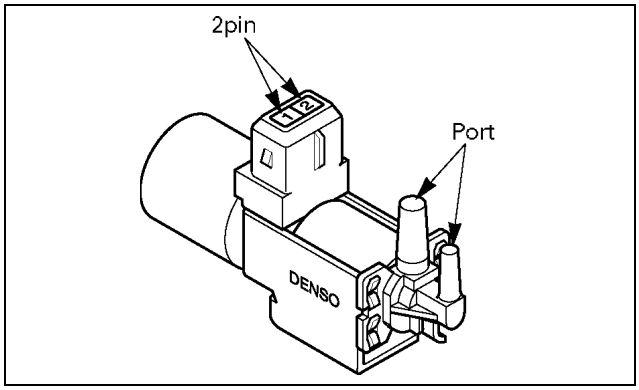

Figure. VSV:EGR

056LW026.tif

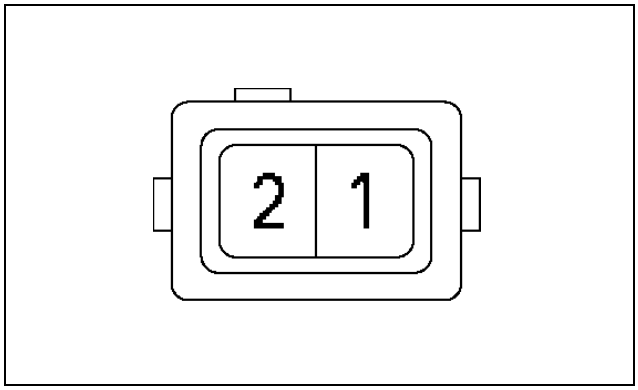

Figure. VSV:EGR connector

821LX001.tif

Connector No	Signal
1 2	GND SIG

Measure resistance at VSV:EGR

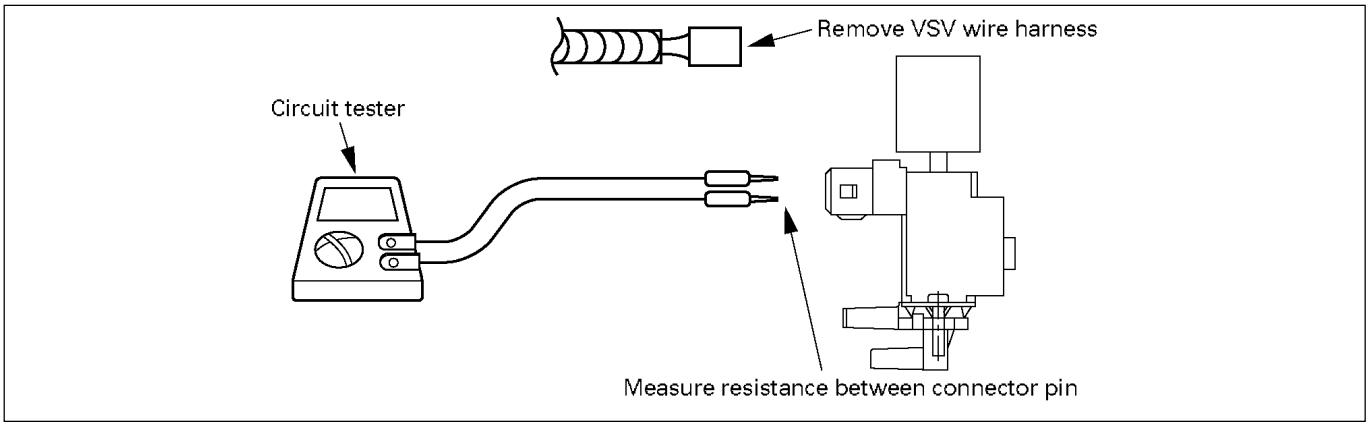

056LW005.tif

CAUTION:

When measuring resistance with a circuit tester, be careful not to damage or deform the terminals.

Resistance value

Inspection Point		Resistance Value (Ω)	Reference
Connector	Pin No.		
2 pin Black	2 ←→ 1	37 - 44 (for 12 volt) 159 - 169 (for 24 volt)	SIG ←→ GND
	1 ←→ Body	∞	SIG ←→ Body

Note: Resistance value is difference according to the engine temperature (condition of engine warming up)

Step	Action	Value (s)	Yes	No
1	Was the “Diagnostic system check” performed?	-	Go to Step 2	Go to diagnostic system check
2	1. Ignition “OFF”. 2. Disconnect the VSV from the wiring harness connector. 3. Ignition “ON” Engine “OFF”. 4. Using the Digital Voltmeter (DVM), check for voltage on the “Power supply side terminal” of the VSV harness connector. Does the DVM read the following value?	(12 Volt) 24 Volt	Go to Step 4	Go to Step 3
3	1. Check the suspect circuit between the VSV connector and “Engine Ignition”. Fuse for the following condition. * A short to ground * An open circuit 2. Repair if necessary. Has DTC 31 been corrected?	-	Go to Step 8	-
4	Using the DVM, check the resistance of the VSV Does the DVM read the following Value?	37 ~ 44Ω 159 ~ 169Ω	Go to Step 5	Go to Step 6
5	1. Ignition “OFF” 2. Disconnect the ECM connector from ECM. 3. Check the VSV circuit between the ECU and VSV connector. * A short to ground * An open circuit 2. Repair if necessary. Has DTC 31 been corrected?	-	Go to Step 8	Go to Step 7
6	Replace the VSV. Is the action complete?	-	Go to Step 8	-
7	Replace the ECM. Is the action complete?	-	Go to Step 8	-
8	1. Reconnect all the connectors removed. 2. Ignition “ON”, Engine “OFF”. Does DTC 33 come normal condition?	-	Go to Step 9	Go to Step 2
9	Is any current trouble other than DTC 33 displayed by indicator light?	-	Go to trouble code section	Trouble code clear

DTC-32 EXHAUST GAS RECIRCULATION (EGR) VACUUM SWITCHING VALVE (VSV) SOLENOID CONTROL HIGH VOLTAGE

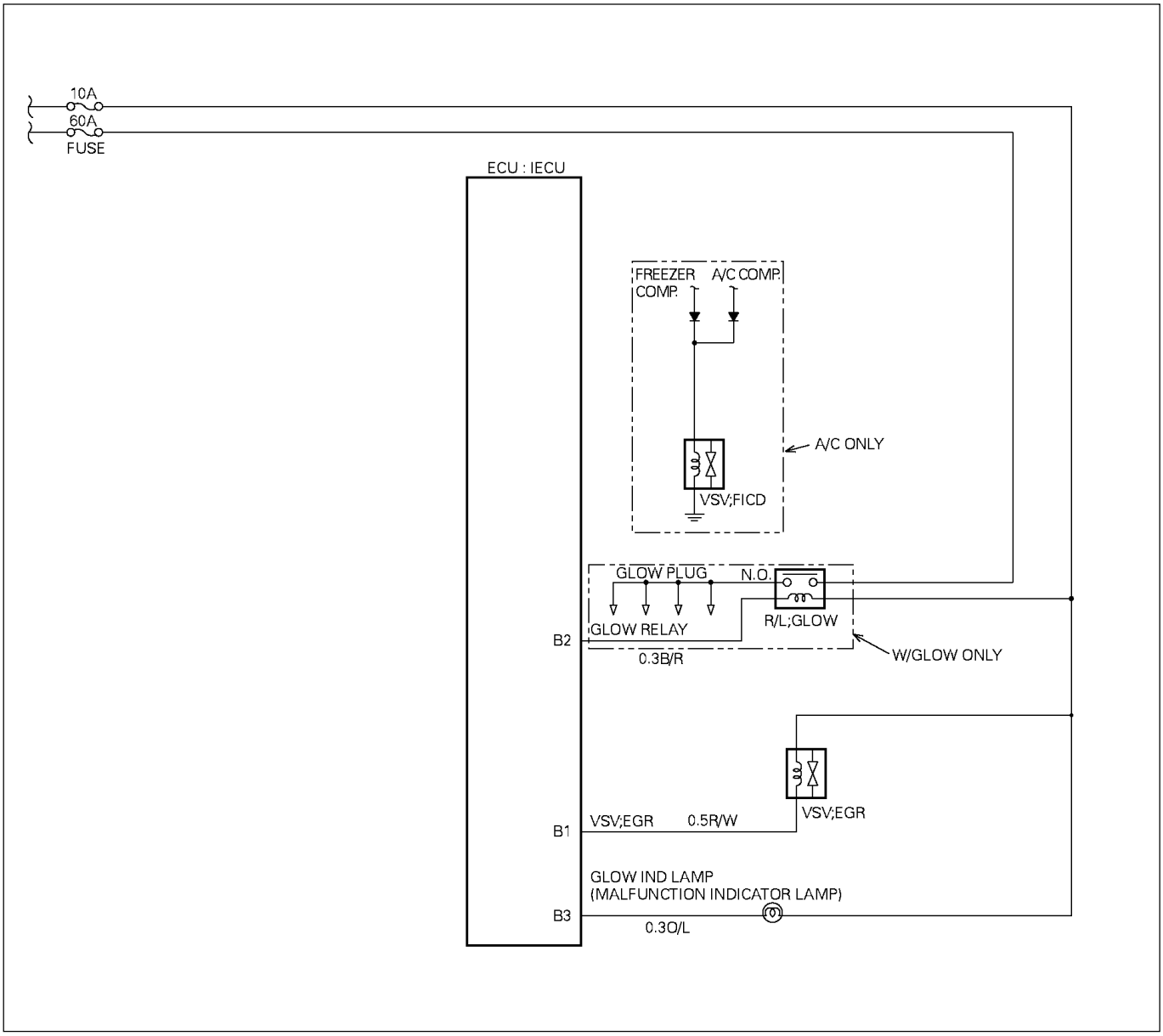

826LX006.tif

Appearance of Vacuum Switching Valve (VSV): Exhaust Gas Recirculation (EGR) connector

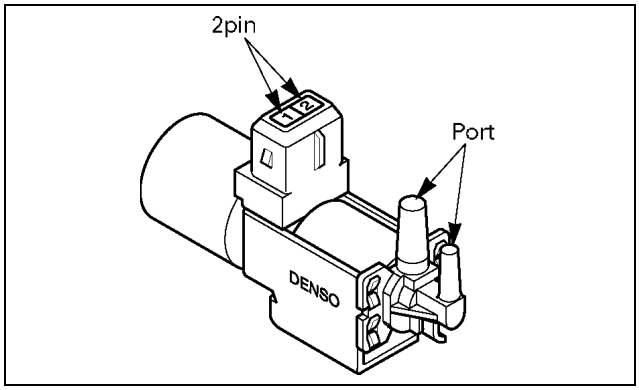

Figure. VSV:EGR

056LW026.tif

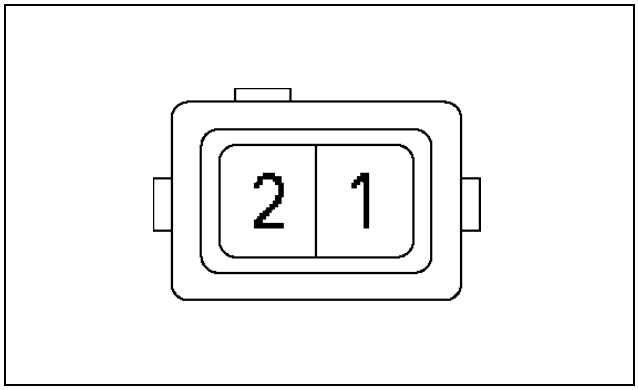

Figure. VSV:EGR connector

821LX001.tif

Connector No	Signal
1 2	GND SIG

Measure resistance at VSV:EGR

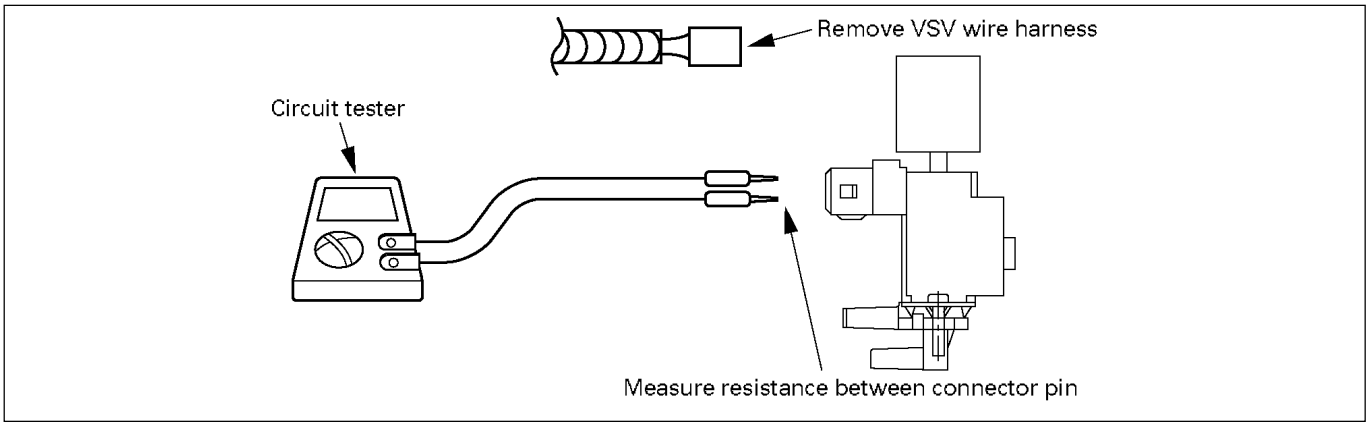

056LW005.tif

CAUTION:

When measuring resistance with a circuit tester, be careful not to damage or deform the terminals.

Resistance value

Inspection Point		Resistance Value (Ω)	Reference
Connector	Pin No.		
2 pin Black	2 ←→ 1	37 - 44 (for 12 volt) 159 - 169 (for 24 volt)	SIG ←→ GND
	1 ←→ Body	∞	SIG ←→ Body

Note: Resistance value is difference according to the engine temperature (condition of engine warming up)

Step	Action	Value (s)	Yes	No
1	Was the “Diagnostic system check” performed?	-	Go to Step 2	Go to diagnostic system check
2	Using the DVM, check the resistance of the VSV Does the DVM read the following Value?	37 ~ 44Ω 159 ~ 169Ω	Go to Step 3	Go to Step 4
3	1. Ignition “OFF”. 2. Disconnect the ECM connector from ECM. 3. Check the short to voltage of VSV circuit between the ECM and VSV connector. 4. Repair if necessary. Has DTC 32 been corrected?	-	Go to Step 6	Go to Step 5
4	Replace the VSV. Is the action complete?	-	Go to Step 6	-
5	Replace the ECM. Is the action complete?	-	Go to Step 6	-
6	1. Reconnect all the connectors removed. 2. Ignition “ON”, Engine “OFF”. Does DTC 32 come normal condition?	-	Go to Step 7	Go to Step 2
7	Is any current trouble other than DTC 34 displayed by indicator light?	-	Go to trouble code section	Trouble code clear

DTC-41 QUICK ON START (QOS) RELAY CONTROL CIRCUIT LOW VOLTAGE

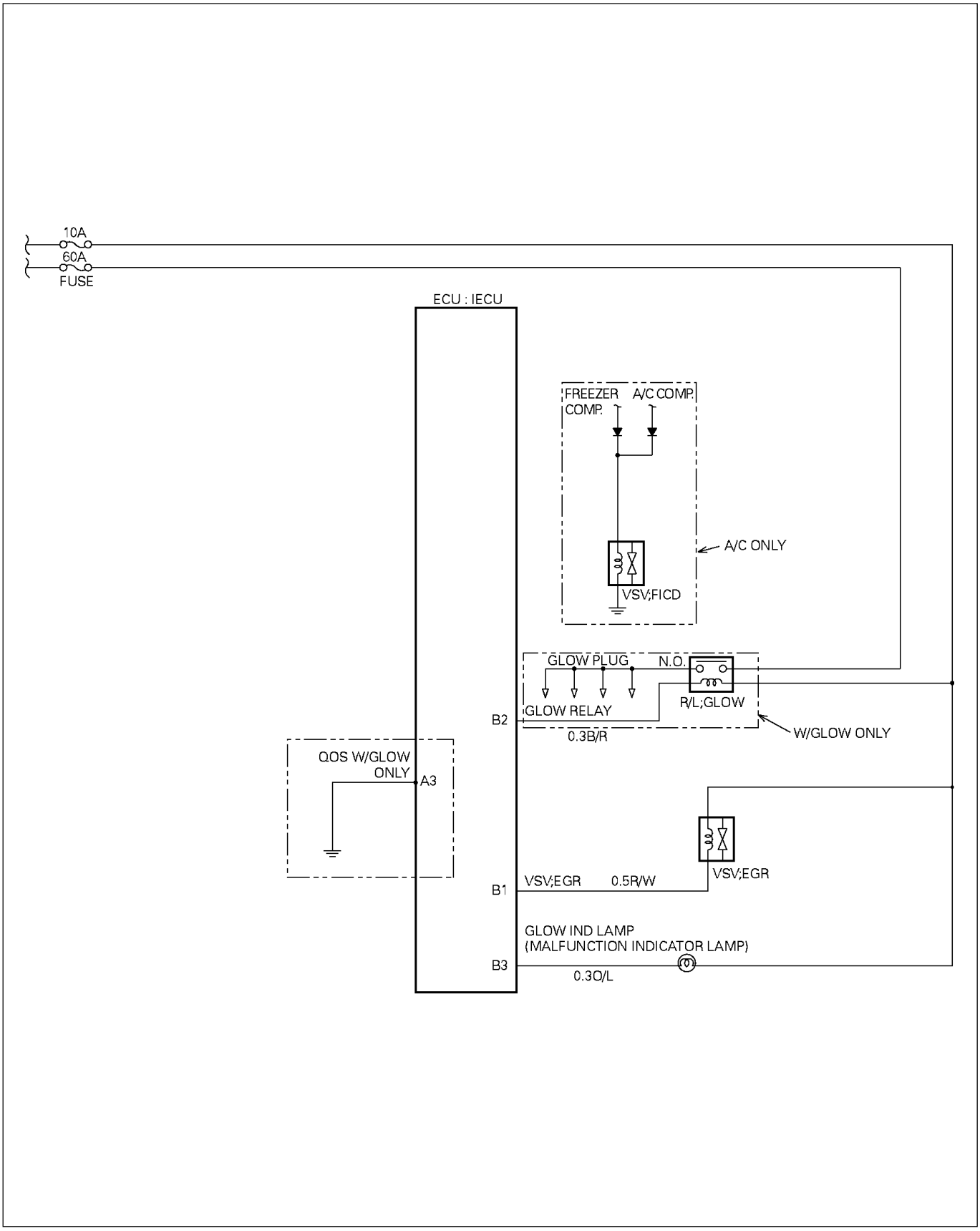

826LX009.tif

Location of relay

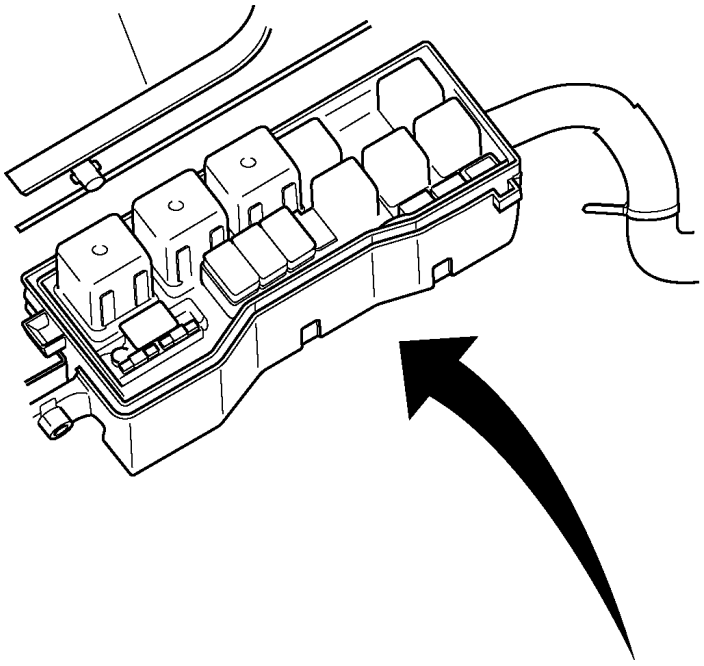

Relay box
(Installed on the left side rear of the cab)

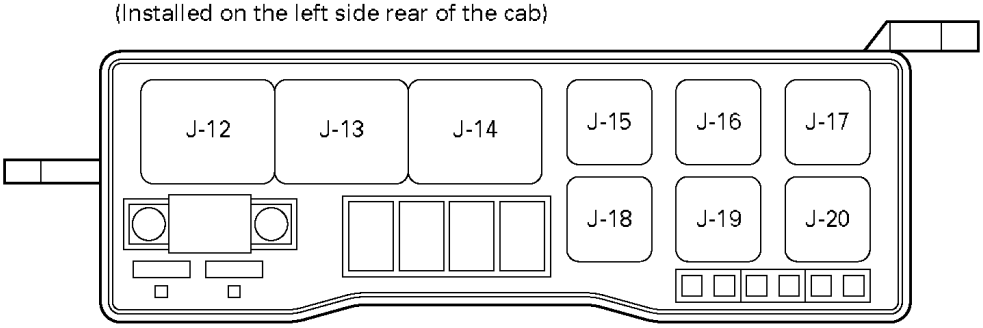

No.	RELAY NAME
J-12	STARTER
J-13	GLOW1 (QOS)
J-14	C/HEATER
J-15	ENG. WARM CUT (QWS)
J-16	———
J-17	CONDENSER FAN
J-18	EXH. BRAKE CONTROL
J-19	———
J-20	MARKER LAMP

826LW038.tif

Inspection for prestroke power cut relay

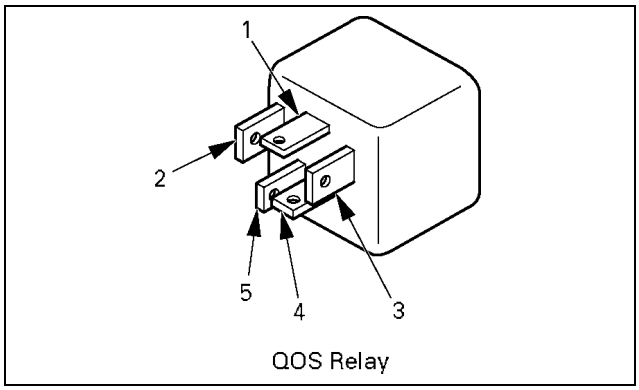

056LW021.tif

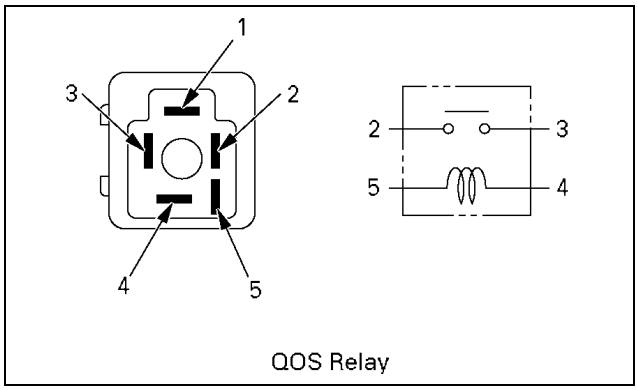

056LW020.tif

Resistance value

Inspection point		Resistance	Reference
Inspection relay unit	4 ←→ 5	23 (Ω) (for 12 volt) 100 (Ω) (for 24 volt)	
	2 ←→ 3	∞	Not be supplied electricity to coil
		Below 0.5 (Ω)	Be supplied electricity to coil

Step	Action	Value (s)	Yes	No
1	Was the “Diagnostic system check” performed?	-	Go to Step 2	Go to diagnostic system check
2	1. Ignition “OFF” 2. Disconnect the Relay from the Relay box connector. 3. Ignition “ON” Engine “OFF” 4. Using the Digital Voltmeter (DVM), check for voltage on the “Power supply side terminal” terminal of the Relay Box Connector. Does the DVM read the following value?	(12 Volt) or 24 Volt	Go to Step 4	Go to Step 3
3	1. Check the suspect circuit between the Relay connector. Fuse for the following condition. * A short to ground * An open circuit 2. Repair if necessary. Has DTC 41 been corrected?	-	Go to Step 8	-
4	Using the DVM, check the resistance of inter “4” “5” Relay terminal. Does the DVM read the following Value?	23Ω (for 12 Volt) 100Ω (for 24 Volt)	Go to Step 5	Go to Step 6
5	1. Ignition “OFF” 2. Disconnect the ECM connector from ECM. 3. Check the Relay circuit between the ECU and Relay connector * A short to ground * An open circuit 2. Repair if necessary. Has DTC 41 been corrected?	-	Go to Step 8	Go to Step 7
6	Replace the Relay. Is the action complete?	-	Go to Step 8	-
7	Replace the ECM. Is the action complete?	-	Go to Step 8	-
8	1. Reconnect all the connectors removed. 2. Ignition “ON”, Engine “OFF” Does DTC 41 come normal condition?	-	Go to Step 9	Go to Step 2
9	Is any current trouble other than DTC 41 displayed by indicator light?	-	Go to trouble code section	Trouble code clear

DTC-42 QUICK ON START (QOS) RELAY CONTROL CIRCUIT HIGH VOLTAGE

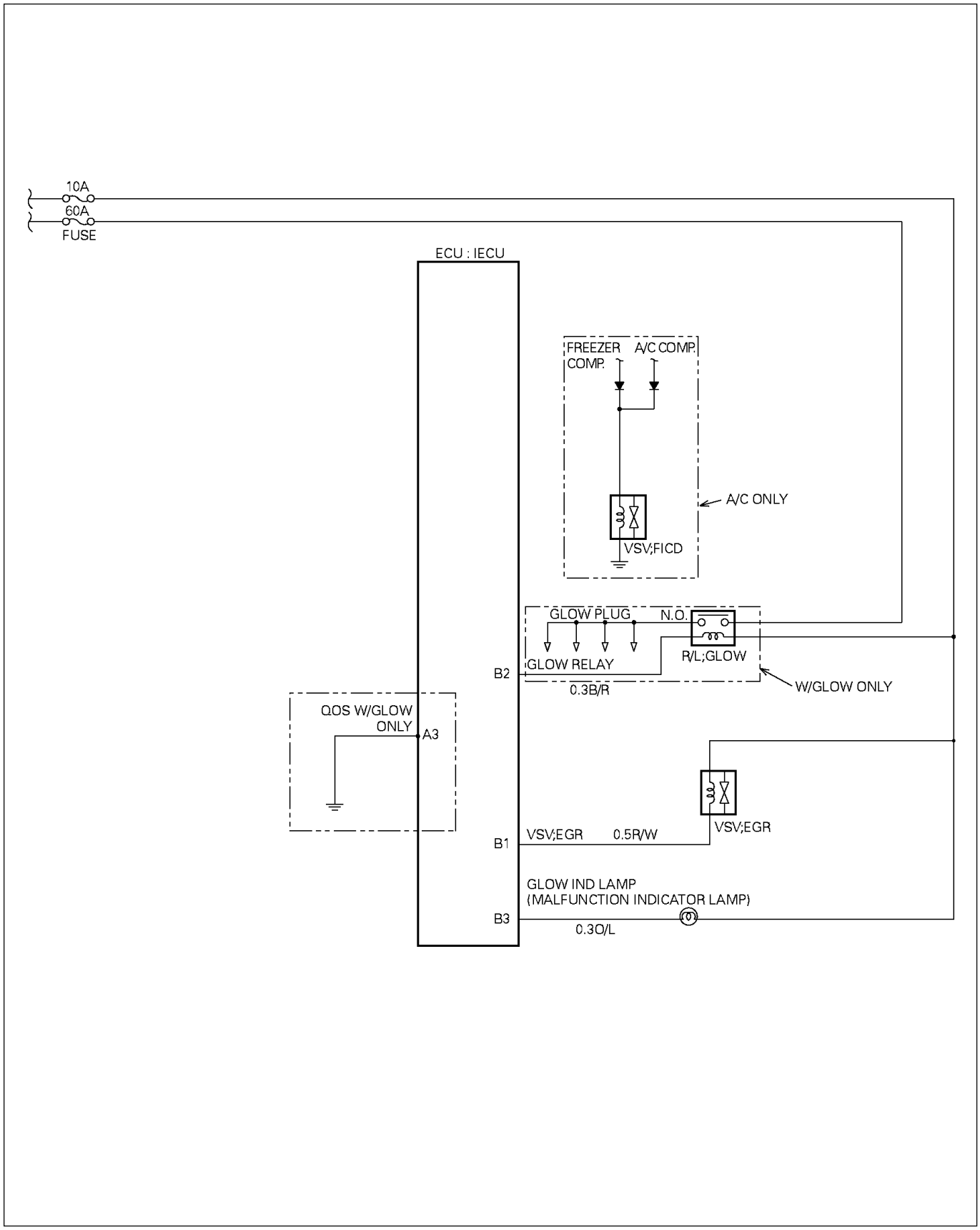

826LX009.tif

Location of relay

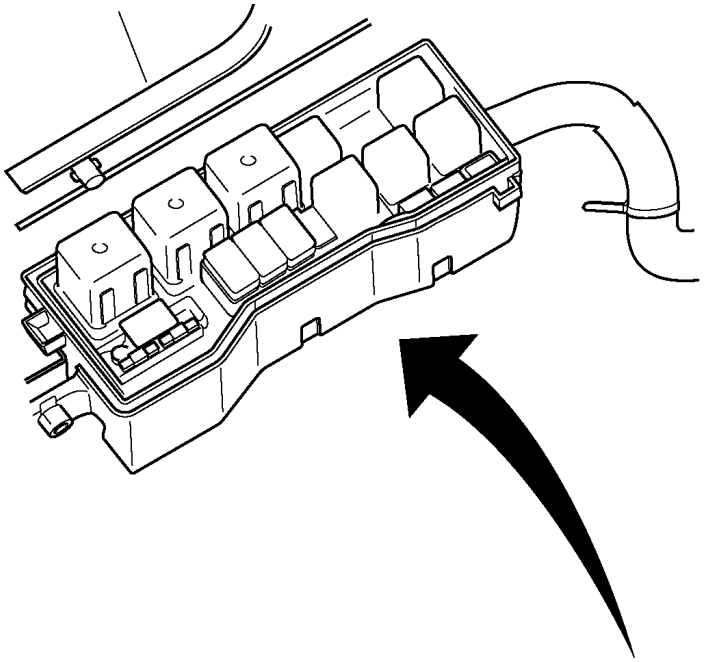

Relay box
(Installed on the left side rear of the cab)

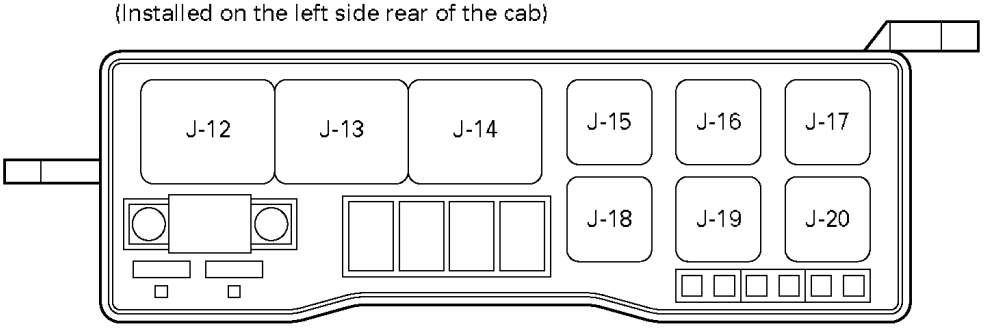

No.	RELAY NAME
J-12	STARTER
J-13	GLOW1 (QOS)
J-14	C/HEATER
J-15	ENG. WARM CUT (QWS)
J-16	———
J-17	CONDENSER FAN
J-18	EXH. BRAKE CONTROL
J-19	———
J-20	MARKER LAMP

826LW038.tif

Inspection for Quick On Start (QOS) power cut relay

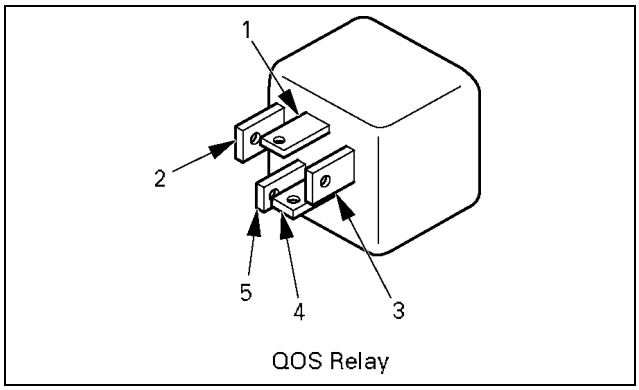

056LW021.tif

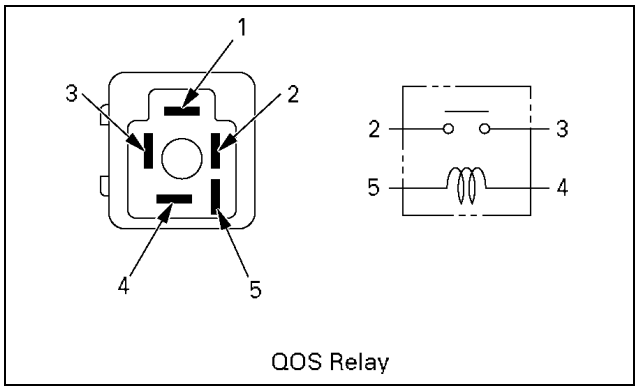

056LW020.tif

Resistance value

Inspection point		Resistance	Reference
Inspection relay unit	4 ←→ 5	23 (Ω) (for 12 volt) 100 (Ω) (for 24 volt)	
	2 ←→ 3	∞	Not be supplied electricity to coil
		Below 0.5 (Ω)	Be supplied electricity to coil

Step	Action	Value (s)	Yes	No
1	Was the “Diagnostic system check” performed?	-	Go to Step 2	Go to diagnostic system check
2	Using the DVM, check the resistance between terminal number 4 and 5 of the Relay. Does the DVM read the following Value?	23Ω (for 12 Volt) 100Ω (for 24 Volt)	Go to Step 3	Go to Step 4
3	1. Ignition “OFF” 2. Disconnect the ECM connector from ECM. 3. Check the short to voltage of Relay circuit between the ECM and Relay connector 4. Repair if necessary. Has DTC 42 been corrected?	-	Go to Step 6	Go to Step 5
4	Replace the Relay. Is the action complete?	-	Go to Step 6	-
5	Replace the ECM. Is the action complete?	-	Go to Step 6	-
6	1. Reconnect all the connectors removed. 2. Ignition “ON”, Engine “OFF” Does DTC 42 come normal condition?	-	Go to Step 7	Go to Step 2
7	Is any current trouble other than DTC 42 displayed by indicator light?	-	Go to trouble code section	Trouble code clear

DTC-52 ELECTRONICALLY ERASABLE PROGRAMMABLE READ ONLY MEMORY (EEPROM) ERROR

Step	Action	Value (s)	Yes	No
1	Was the “Diagnostic system check” performed?	-	Go to Step 2	Go to diagnostic system check
2	Replace the ECM Is the action complete?	-	Go to Step 3	-
3	1. Reconnect all the connectors removed. 2. Ignition “ON”, Engine “OFF” Is DTC 52 all right under Scan Tool Check?	-	Go to Step 4	Go to Step 2
4	Is any current trouble other than DTC 52 displayed by indicator light?	-	Go to trouble code section	Trouble code clear

WITHOUT DIAGNOSIS TROUBLE CODE

INTRODUCTION

If there occurs a malfunction although no Diagnostic Trouble Code (DTC) is generated, then inspect and repair the system in accordance with the flowcharts given on the following pages.

When a Diagnostic Trouble Code (DTC) is produced, inspect and repair system with reference to “EMISSION AND ELECTRICAL DIAGNOSIS”

STARTUP FAILURE (Quick On Start only)

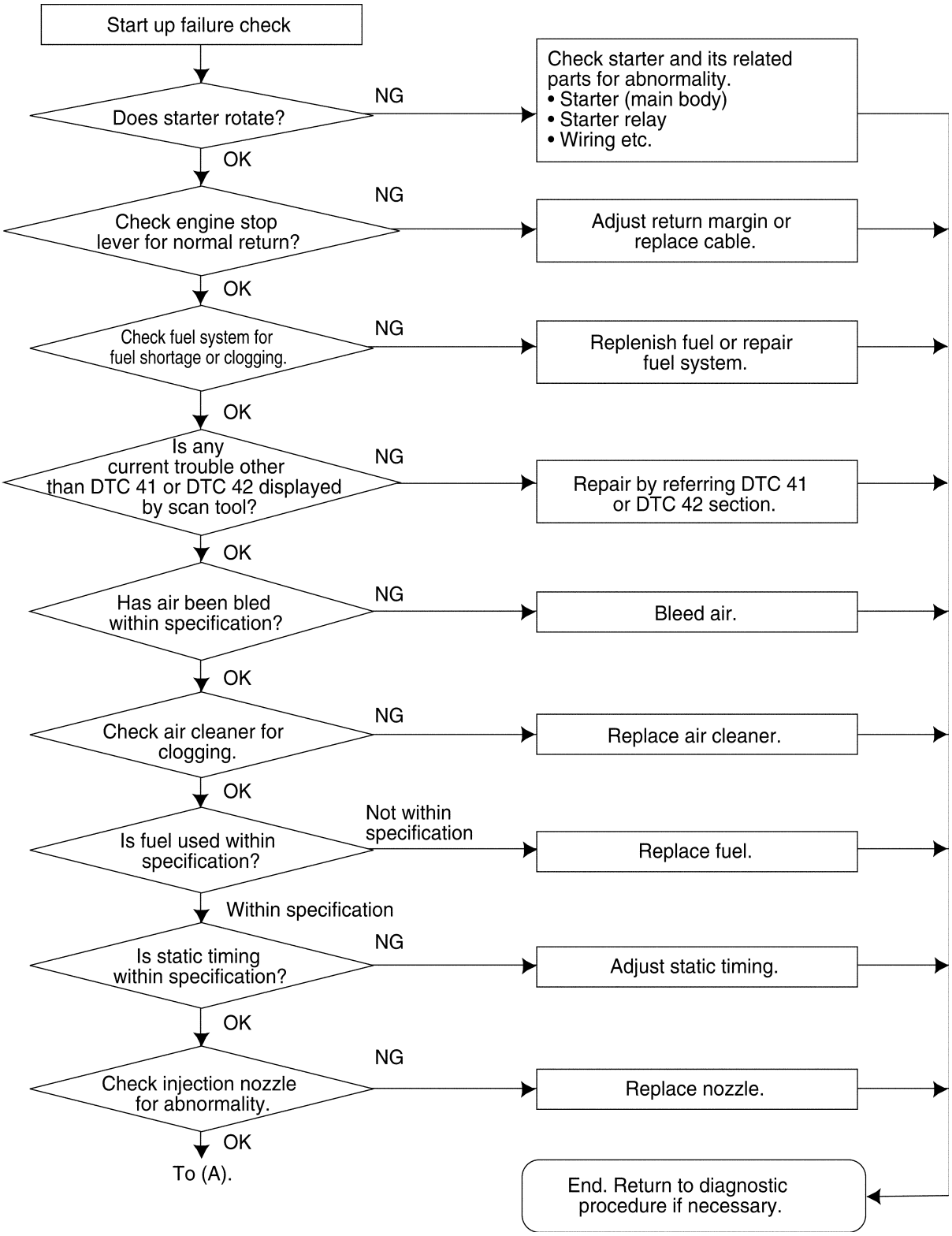

Flow189.tif

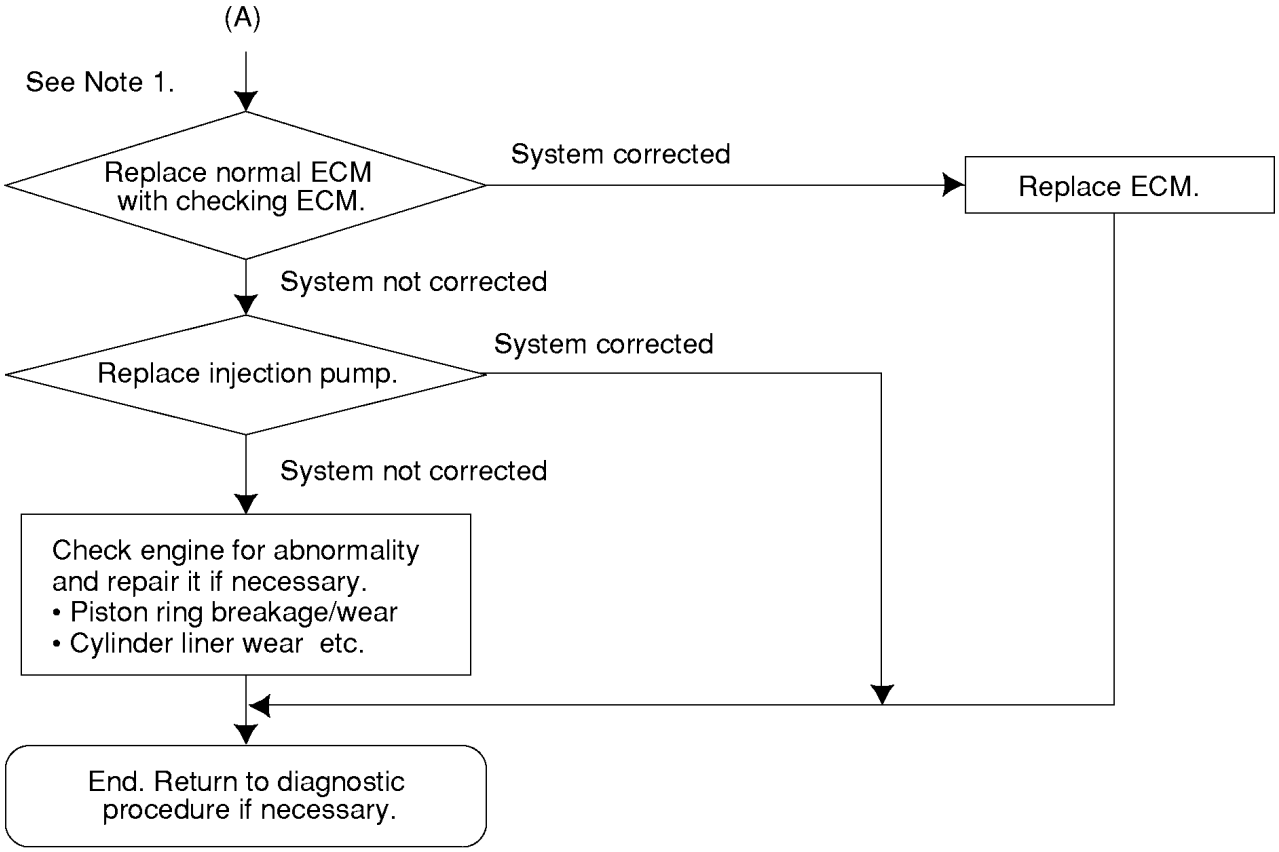

flow03BStartup.tif

NOTE 1:

The condition of the system in which the malfunction has occurred should be checked by making comparisons between the vehicle Engine Control Module (ECM) and the checking ECM.

BLACK SMOKE (EXCESSIVE)

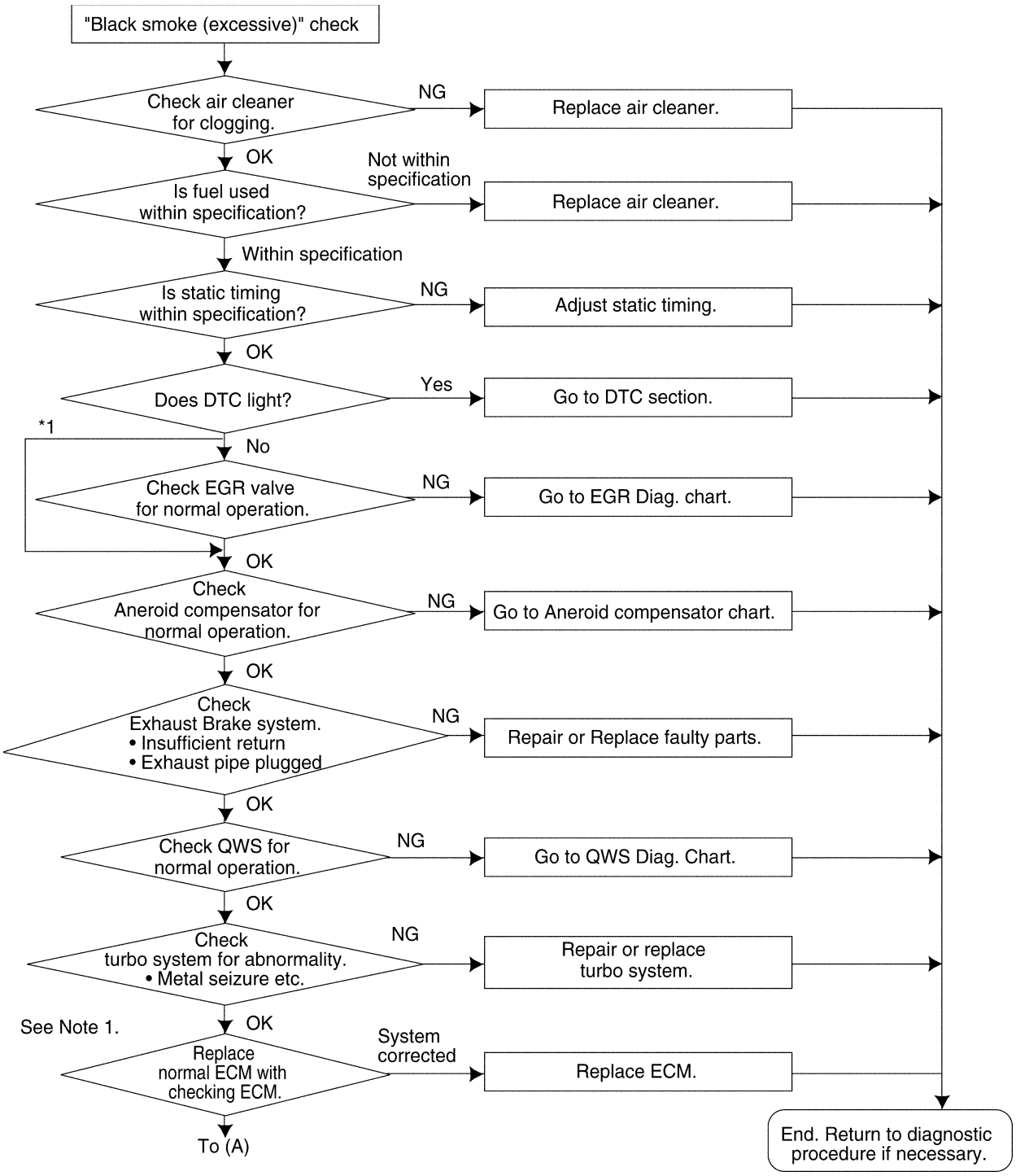

Flow191.tif

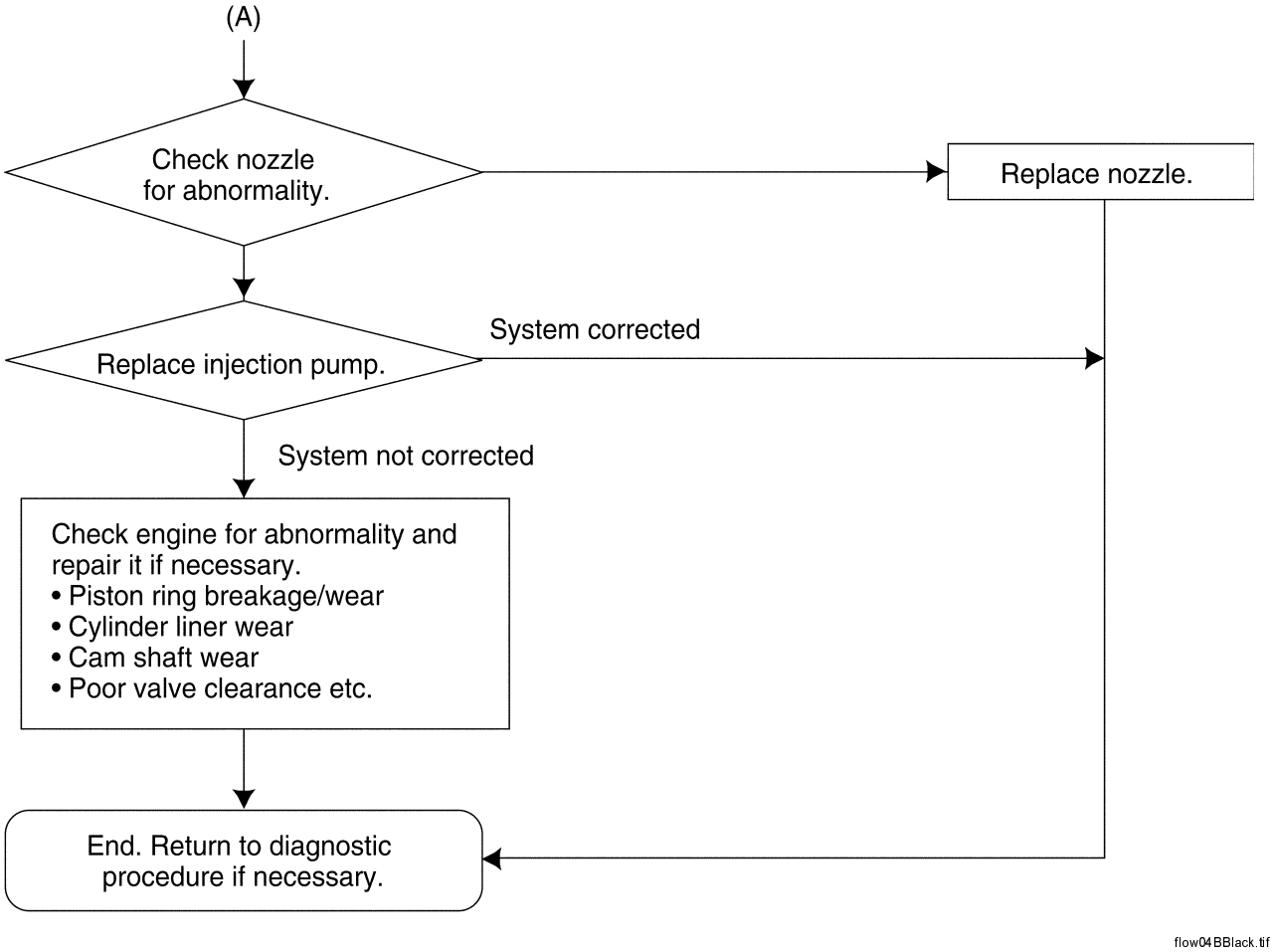

NOTE 1:

The condition of the system in which the malfunction has occurred should be checked by making comparisons between the vehicle Engine Control Module (ECM) and the checking ECM.

NOTE 2:

Refer to a trouble code for a supplier's check, if available.

LACK OF POWER

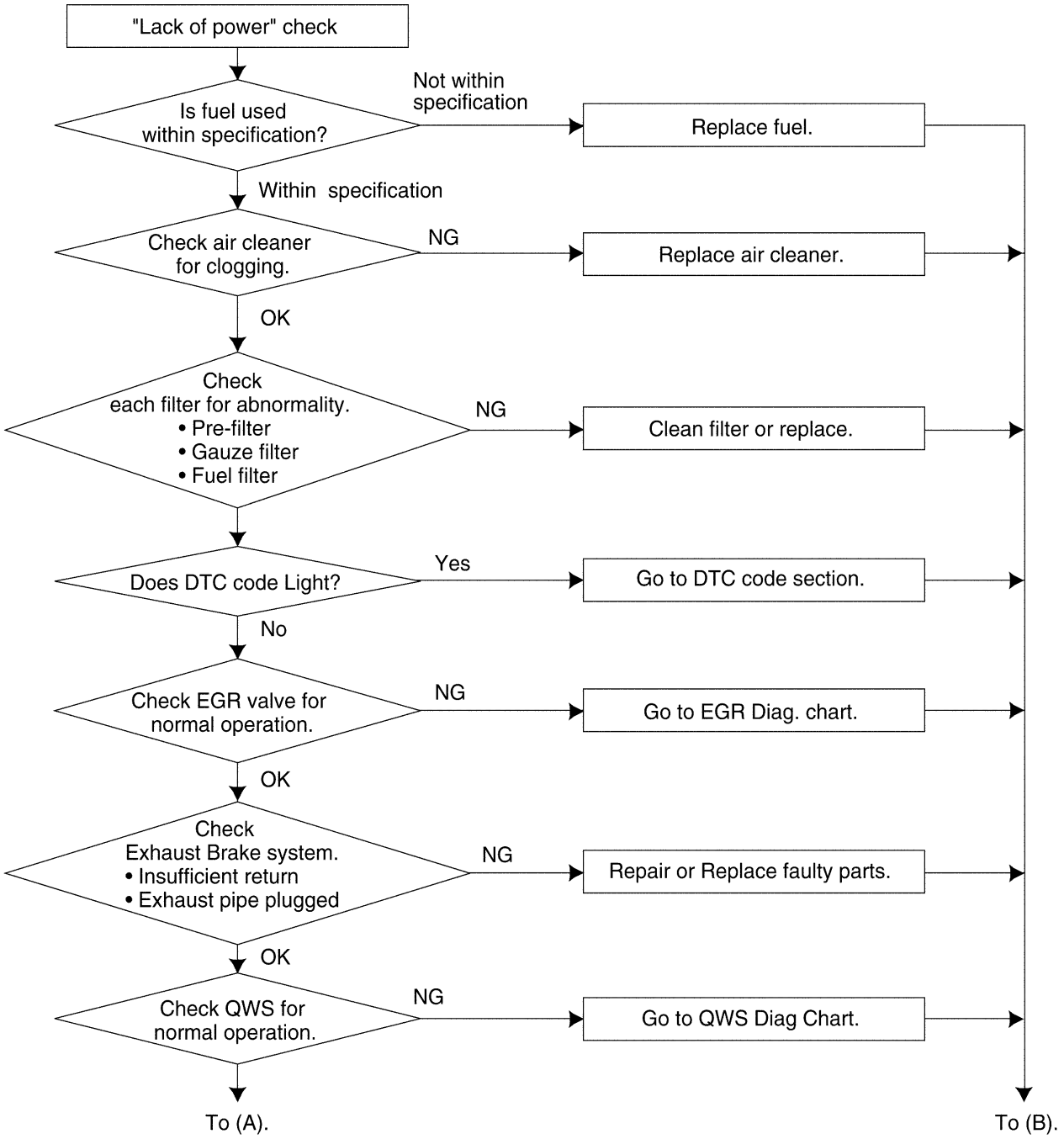

Flow193.tif

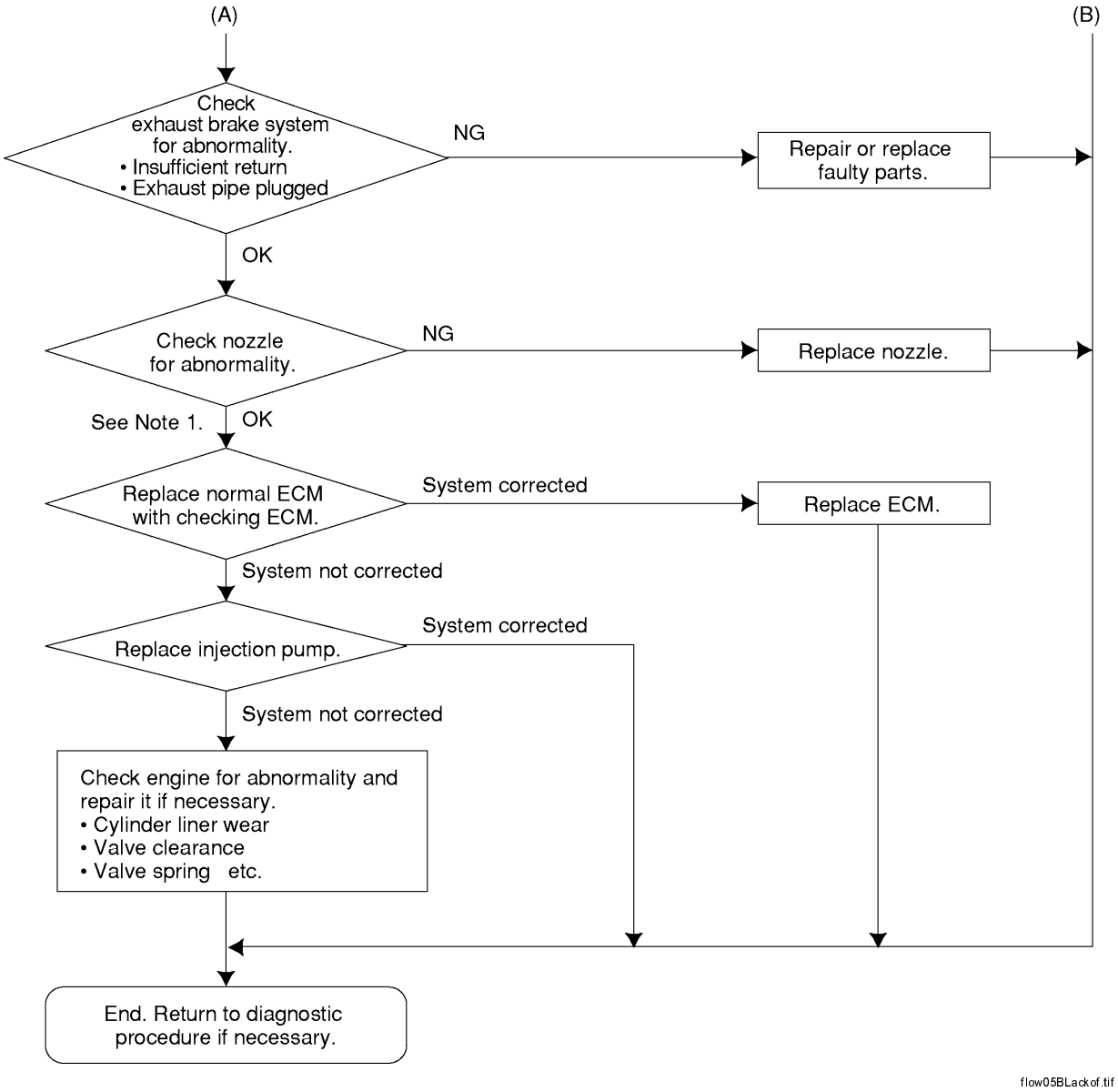

NOTE 1:

The condition of the system in which the malfunction has occurred should be checked by making comparisons between the vehicle Engine Control Module (ECM) and the checking ECM.

EXHAUST BRAKE MALFUNCTION (Exhaust Brake only)

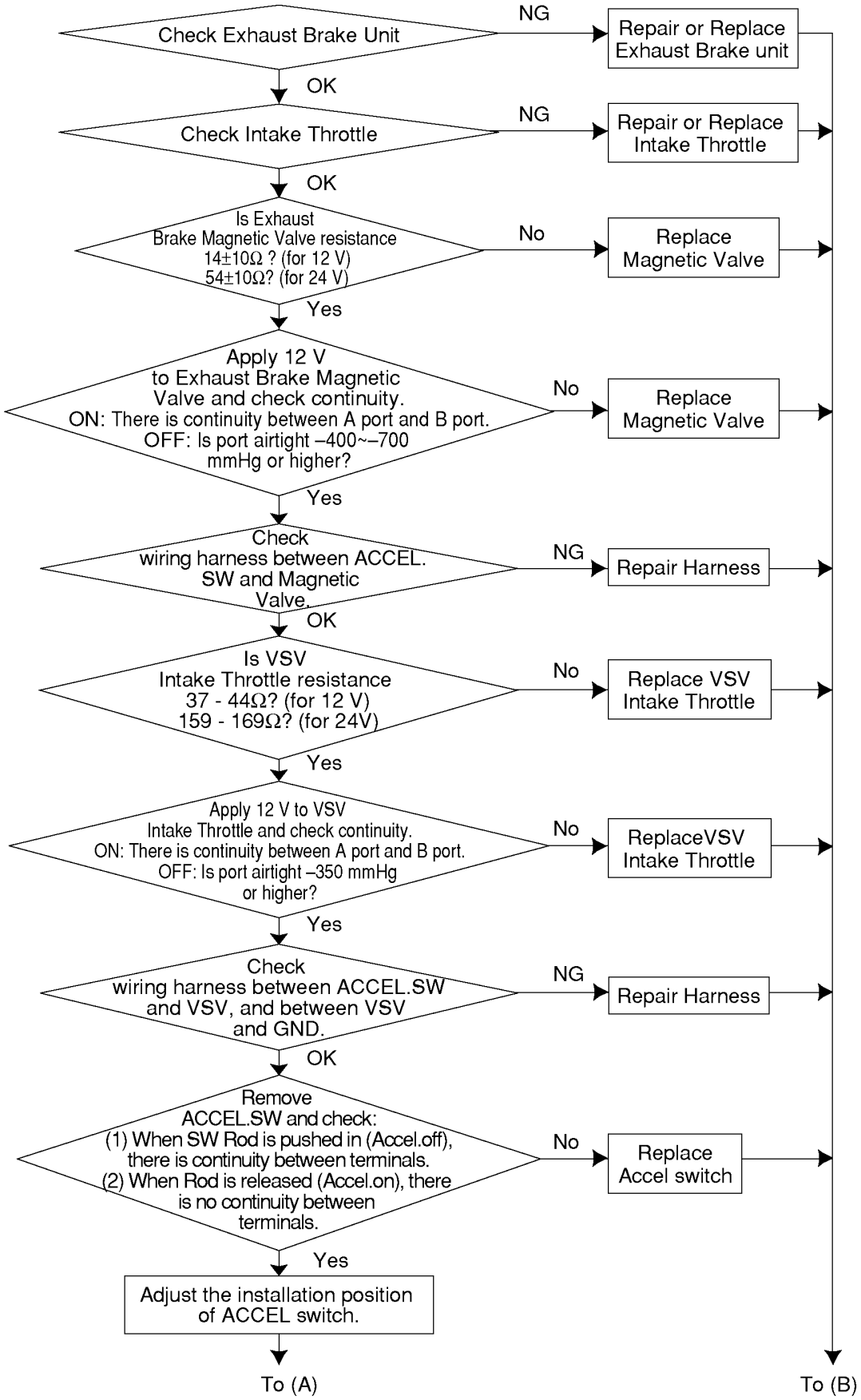

flows07ExhaustBk.tif

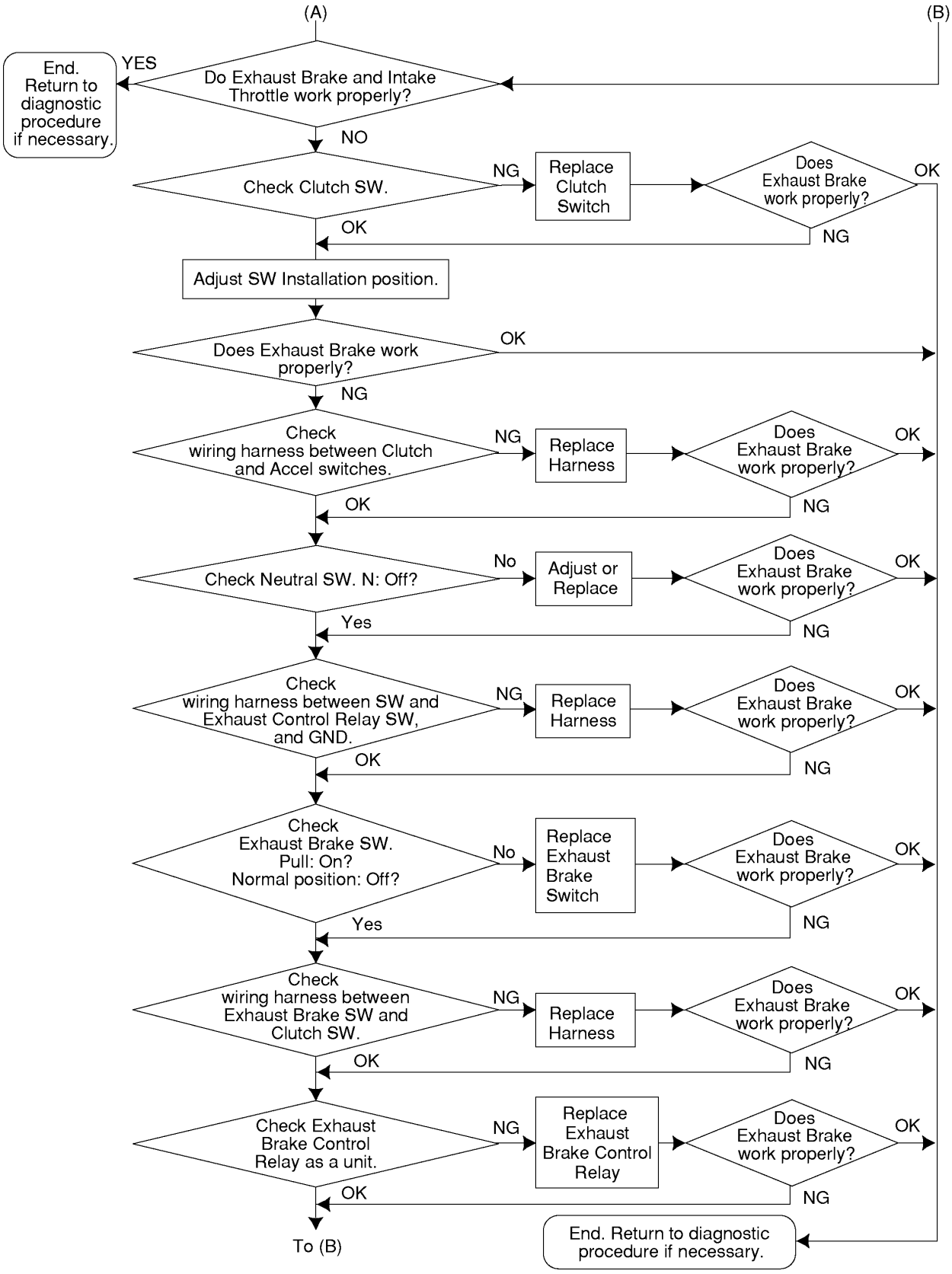

flows08QWSsysCheck.tif

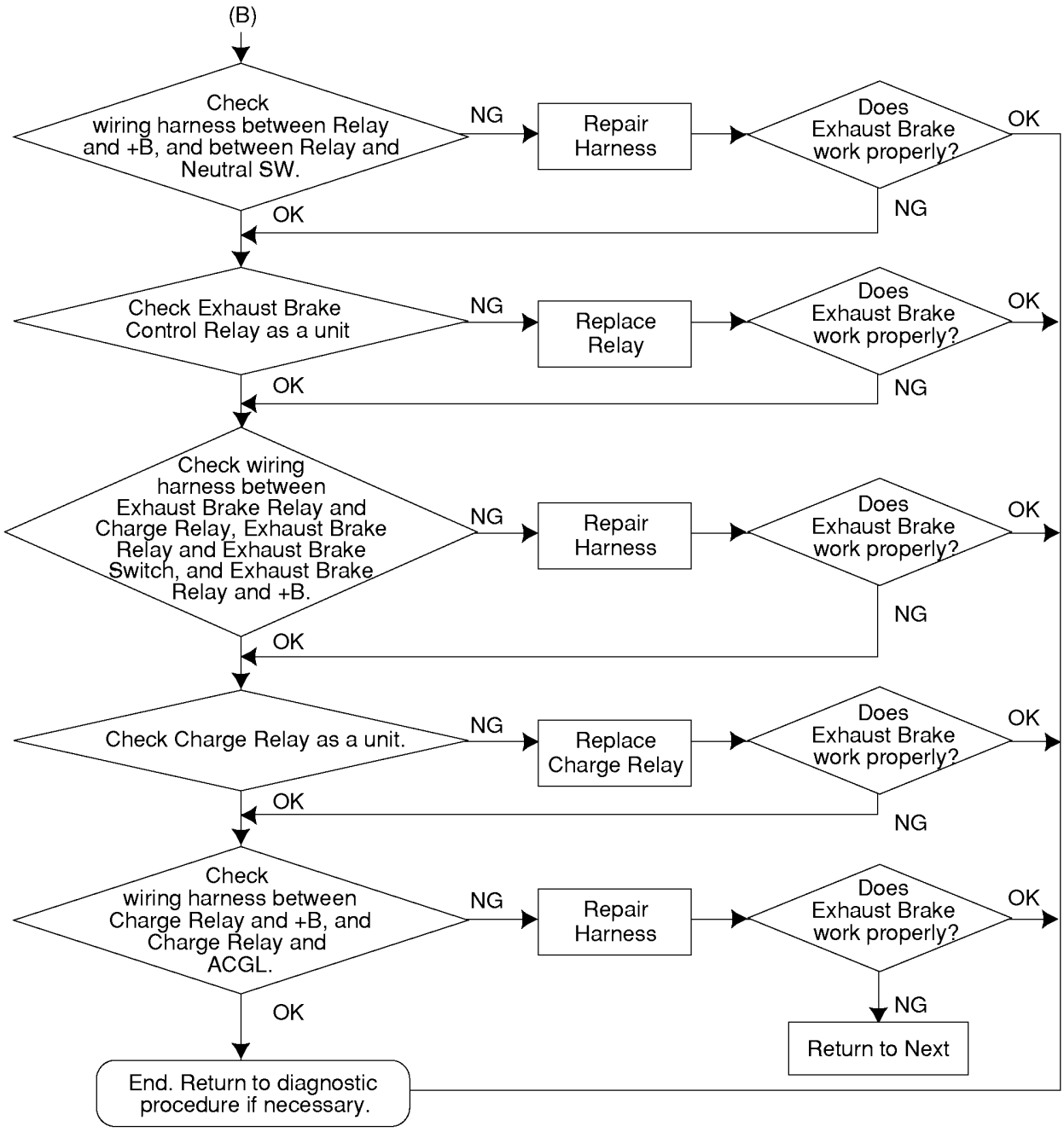

* Repair of wiring harness includes diode check.

flows09QWSsysCheck.tif

INSPECTION

1. Exhaust Brake Magnetic Valve

Inspection

Connect the magnetic valve connector terminal No.1 and No.2 to (+) terminal and (-) terminal of battery, respectively, and check the continuity between the ports.

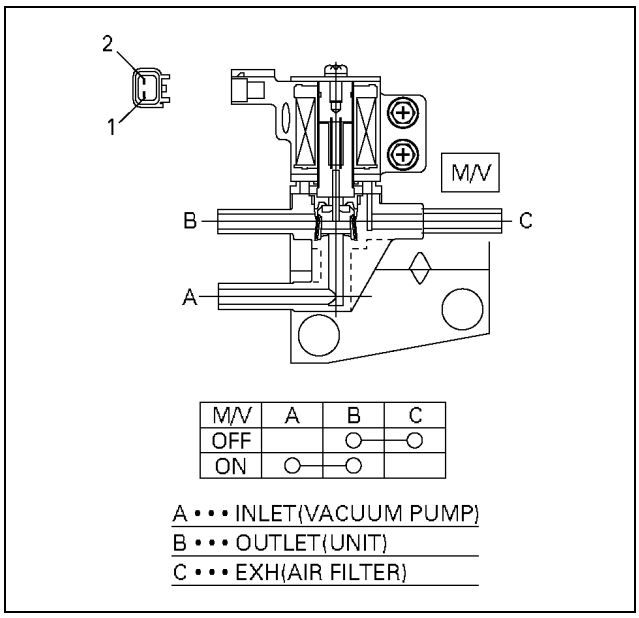

056LW010.tif

CAUTION: When measuring resistance with a circuit tester, be careful not to damage or deform the terminals.

2. Exhaust Throttle Valve

Working

Actuate the exhaust brake with the engine idling and make sure that you hear the valve strike on the stopper.

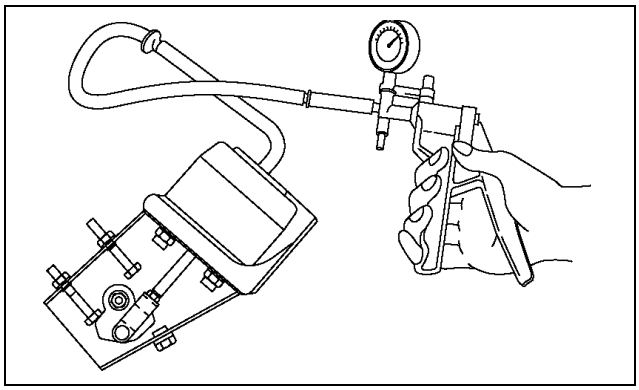

157LW002.tif

Unit

Apply a negative pressure of 53.3 kPa - 93.3 kPa {400 mmHg - 700 mmHg} to the power chamber by means of a vacuum pump and make sure of the smooth opening/closing of the exhaust brake valve.

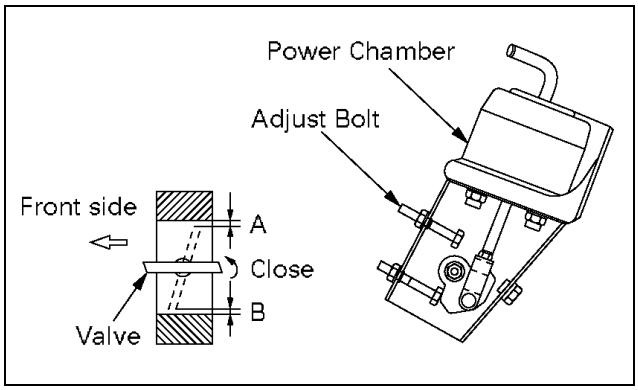

157LW001.tif

Apply a negative pressure of 86.7 - 93.3 kPa {650 - 700 mmHg} to the power chamber using a vacuum pump and make sure the average of measurements at Point A and Point B of the clearance between valve and body is as follows: 0.4 mm - 0.6 mm (Minimum: 0.4mm)
If the clearance is out of this range, adjust with the adjusting bolt.

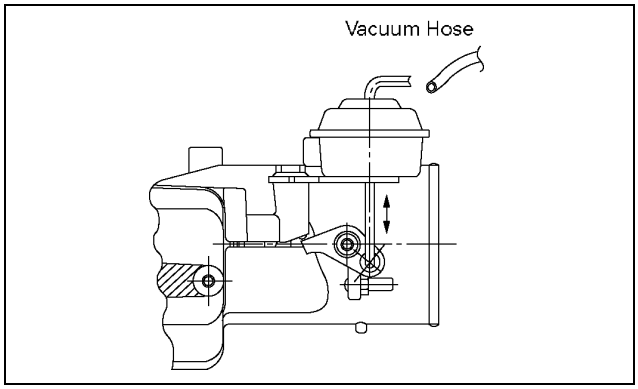

025LW001.tif

3. Intake Throttle Valve

Working

Disconnect the vacuum hose from the actuator and try to move the rod by hand, making sure of the smooth move of the rod.

EXHAUST GAS RECIRCULATION (EGR) SYSTEM MALFUNCTION4. Vacuum Switching Valve; Intake Throttle

Inspection

Connect the vacuum switching valve connector terminals No.1 and No.2 to (+) terminal and (-) terminals of battery, respectively, and check the continuity between the ports.
If the check result is abnormal, repair or replace the valve.

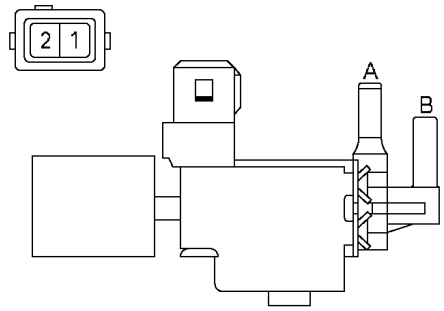

Volume Condition \ Port	A	B
Operation	○	○
Not Operation		

065LW005.tif

5. Accelerator Switch (2-pole connector type)

Inspection

1. Check the continuity between the switch connector terminals.

CAUTION: When measuring resistance with a circuit tester, be careful not to damage or deform the terminals.

2. Check the smooth move of the pushrod. If the check result is abnormal, repair or replace the pushrod.

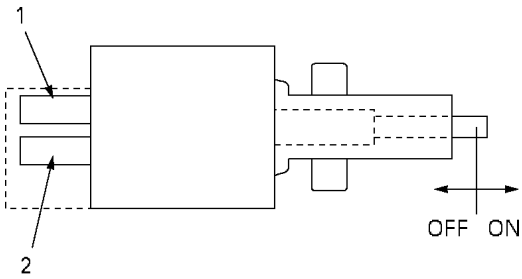

Switch position \ Connection pin	1	2
Release push rod	○	○
Push in Push rod		

065LW003.tif

Removal

1. Accelerator Switch
   Disconnect the connector.
   Loosen the lock nut.
   Turn the switch to remove.

Re installation

To install, follow the removal procedure in reverse order:

1. Drive the threaded part of the switch until its end surface becomes flush with that of the bracket side of nut.
2. Tighten the lock nut.

   Tightening torque: 1.3 N·m {130 kg··cm}

EXHAUST GAS RECIRCULATION (EGR) SYSTEM MALFUNCTION

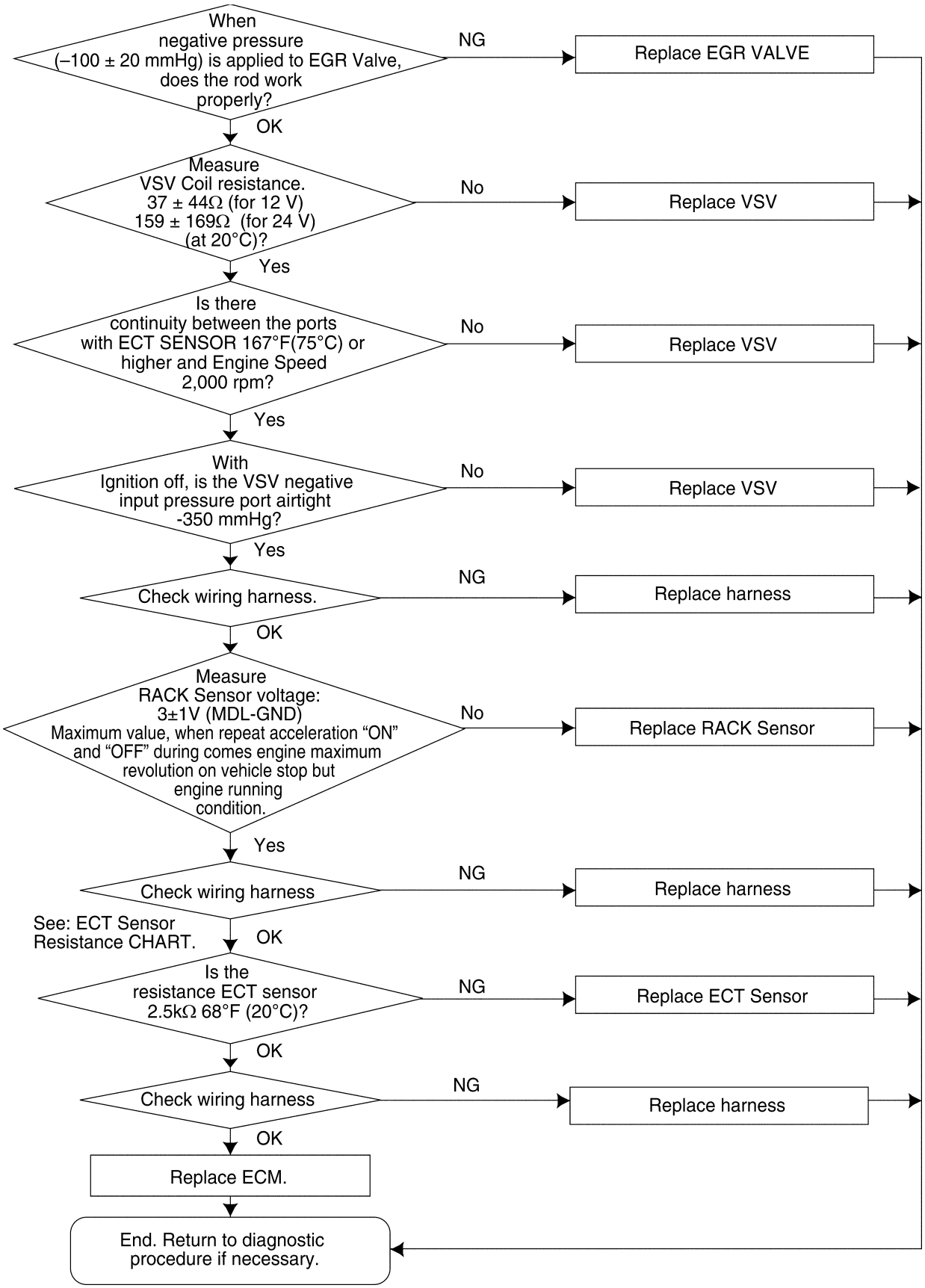

Flow200.tif

INSPECTION

1. Thermosensor (Engine coolant temperature)

Soak the temperature sensitive part of a thermosensor in the water,and while changing the water temperature, make sure the resistance is changed as the following graph shows:

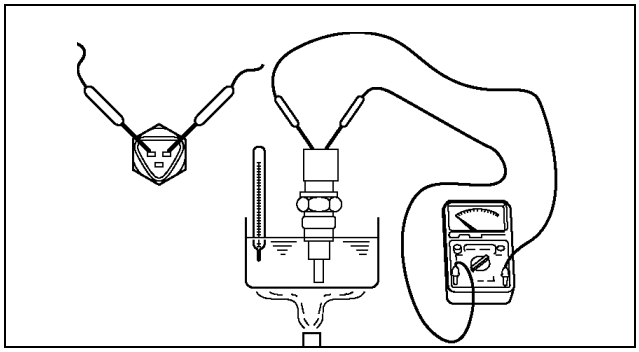

010LW001.tif

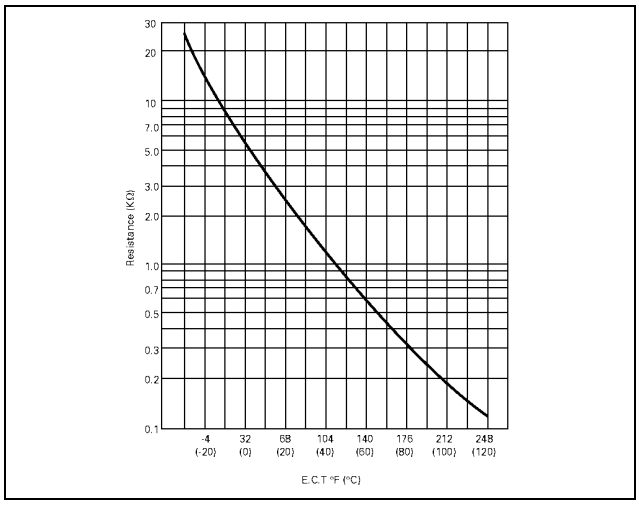

065LW004.tif

2. Vacuum Switching Valve (VSV)

1. Resistance Check

Check the resistance between the VSV connector terminals using a circuit tester.

Cold Resistance: 37-44 (Ω) (for 12 volt model)
: 159-169 (Ω) (for 24 volt model)

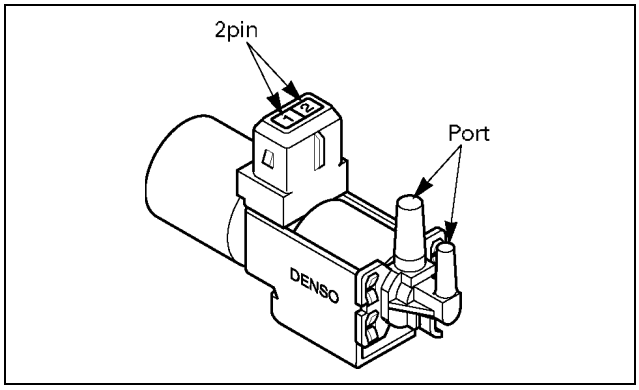

056LW026.tif

Connect battery voltage between VSV connector terminals and make sure of the continuity between the ports.

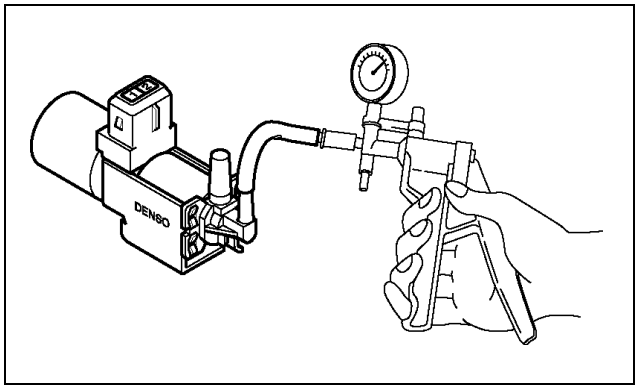

056LW028.tif

2. Airtight Check

Apply negative pressure to the negative pressure input port as illustrated on the left.
Although there is leakage, it is no problem if the negative pressure rises to -350 mmHg (-47 kPa) or more.

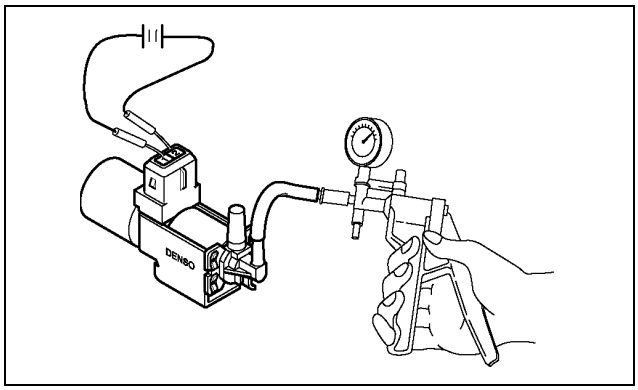

056LW027.tif

3. Working Check

Apply powervoltage between the terminals, there is no problem if the negative pressure does not rise when applied to the input port.

CAUTION: When measuring resistance with a circuit tester, be careful not to damage or deform the terminals.

3. Exhaust Gas Recirculation (EGR) Valve

With negative pressure applied to the diaphragm chamber, make sure that the valve is smoothly actuated to make the area between (1) and (2) ventilated.
Startup: About -100 mmHg ± 20 mmHg

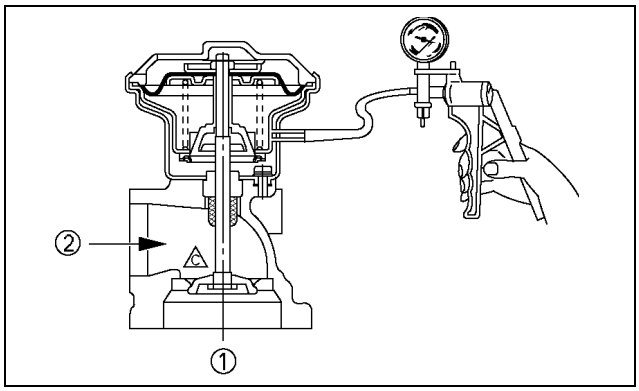

056LW009.tif

Check to see if EGR valve is normally actuated under the following conditions:
Engine coolant temp.: 80 °C or higher

SPECIAL TOOLS

ILLUSTRATION	TOOL NO. TOOL NAME
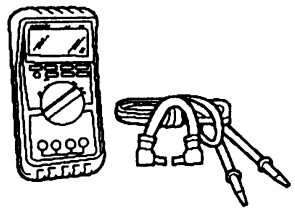 6E-203-1.tif	**5-8840-0366-0** **(J 39200)** High Impedance Multimeter (Digital Voltmeter-DVM)
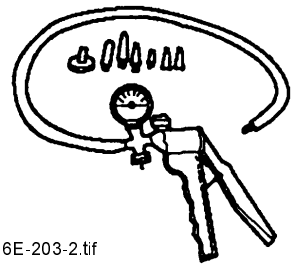 6E-203-2.tif	**5-8840-0279-0** **(J 23738-A)** Vacuum Pump with Gauge

SECTION 6F

EXHAUST

CAUTION:
Exhaust system components must have enough clearance from the underbody to prevent overheating of the floor pan and possible damage to the passenger compartment, insulation and trim materials.

CONTENTS

	PAGE
General Description	**6F - 2**
Gasket	**6F - 2**
On-Vehicle Service	**6F - 3**
Front Exhaust Pipe	**6F - 3**

GENERAL DESCRIPTION

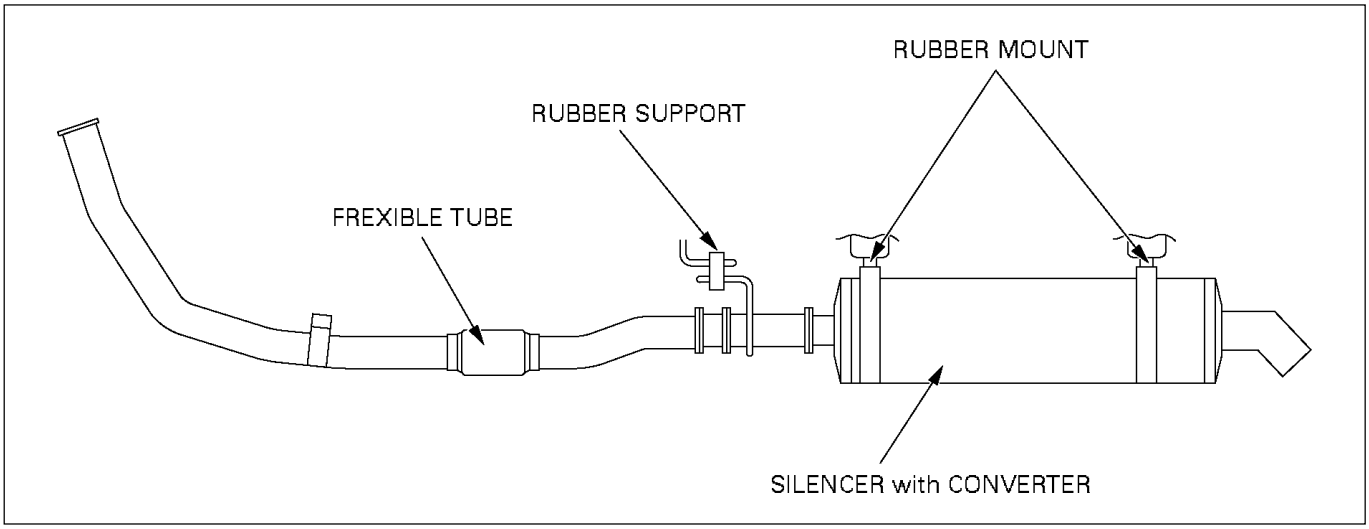

150LX007.tif

The vehicle is equipped with a single horizontal exhaust system which consists of a front exhaust pipe with a heat shield attached, a main exhaust pipe, a silencer with catalytic converter and a tail pipe.

An engine exhaust brake is attached between the front exhaust pipe and the exhaust manifold.

The exhaust brake, when turned on, restricts the flow of exhaust gases and thereby slows the engine.

Be sure the exhaust brake system is turned off before performing any exhaust system diagnosis.

GASKET

The gasket must be replaced whenever a new exhaust pipe, muffler or exhaust throttle is installed.

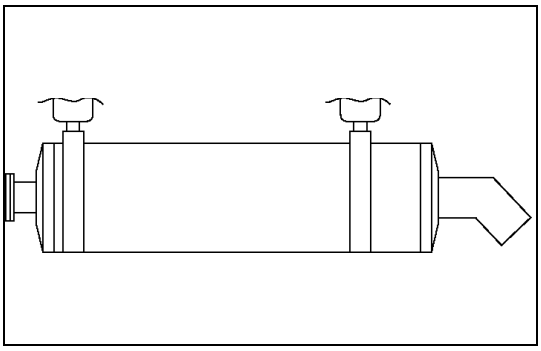

150LX006.tif

THREE WAY CATALYTIC CONVERTER

The three way catalytic converter is an emission control device added to the exhaust system to reduce pollutants from the exhaust gas stream.

CAUTION:

- **The catalytic converter requires the use of unleaded fuel only.**

Periodic maintenance of the exhaust system is not required. If the vehicle is raised for other service, it is advisable to check the condition of the complete exhaust system.

A dual bed monolith catalytic converter is used in combination with three way catalytic converter.

Catalytic Types:

Three way (Reduction/Oxidation) catalyst

The catalyst coating on the three way (reduction) converter contains platinum and rhodium which lowers the levels of nitrogen oxides (NOx) as well as hydrocarbons (HC) and carbon monoxide (Co).

ON-VEHICLE SERVICE

Rattles and noise vibrations in the exhaust system are usually caused by misalignment of parts. When aligning the system, leave all bolts or nuts loose until all parts are properly aligned; then tighten, working from front to rear.

1. Check connections for looseness or damage, especially for exhaust gas leakage.
2. Check clamps and rubbers for weakness, cracks or damage.
3. Check for dents or damage and for any holes or cracks caused by corrosion.

FRONT EXHAUST PIPE

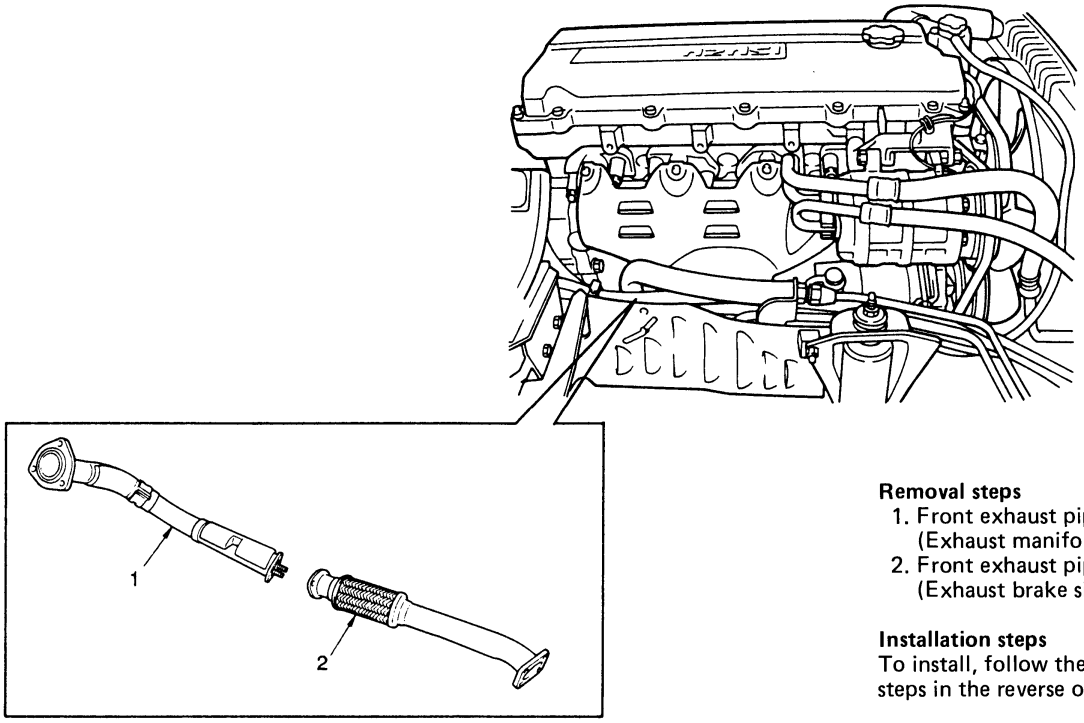

Removal steps
1. Front exhaust pipe I (Exhaust manifold side)
2. Front exhaust pipe II (Exhaust brake side)

Installation steps
To install, follow the removal steps in the reverse order.

6F-3-1.tif

REMOVAL

Preparation

- Battery negative cable.

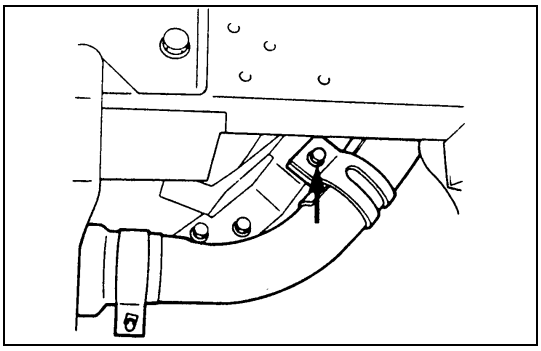

6F-3-2.tif

1. Front Exhaust Pipe I (Exhaust manifold side)

- Remove three nuts from front exhaust pipe I (exhaust manifold side)
- Remove the bolt from mounting bracket (engine right side)
- Remove four bolts and nuts from front exhaust pipe II (exhaust brake side)

2. Front Exhaust Pipe II (exhaust brake side)

INSTALLATION

2. Front Exhaust Pipe II (exhaust brake side)

Exhaust Brake Unit fixing Bolt Torque	N·m (kg·m/lb·ft)
17 (1.7/12)	

1. Front Exhaust Pipe I (exhaust manifold side)

Exhaust Pipe II side	N·m (kg·m/lb·ft)
17 (1.7/12)	

Mounting Bracket Bolt Torque	N·m (kg·m/lb·ft)
18 (1.8/13)	

Manifold Fixing Nut Torque	N·m (kg·m/lb·ft)
67 (6.8/49)	

- Connect battery ground cable.
- Start engine and check for exhaust gas leakage from exhaust pipes.

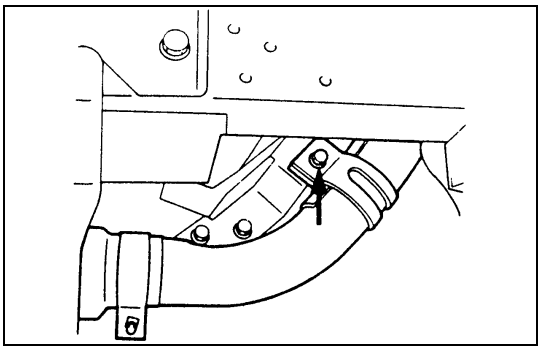

6F-4-1.tif

SECTION 6G
TURBOCHARGER

CONTENTS

PAGE

General Description ..... 6G - 2
On-Vehicle Service ..... 6G - 3
Charge Air Pipe ..... 6G - 4
Intake Manifold ..... 6G - 4
Turbocharger ..... 6G - 5
Inspection and Repair ..... 6G - 6
Oil Leakage Check ..... 6G - 7
Exhaust Manifold ..... 6G - 9
Turbocharger Turbine Housing Replacement (For 4HG1-T model) ..... 6G - 9
Charge Air Cooler ..... 6G -12

GENERAL DESCRIPTION

TURBOCHARGER

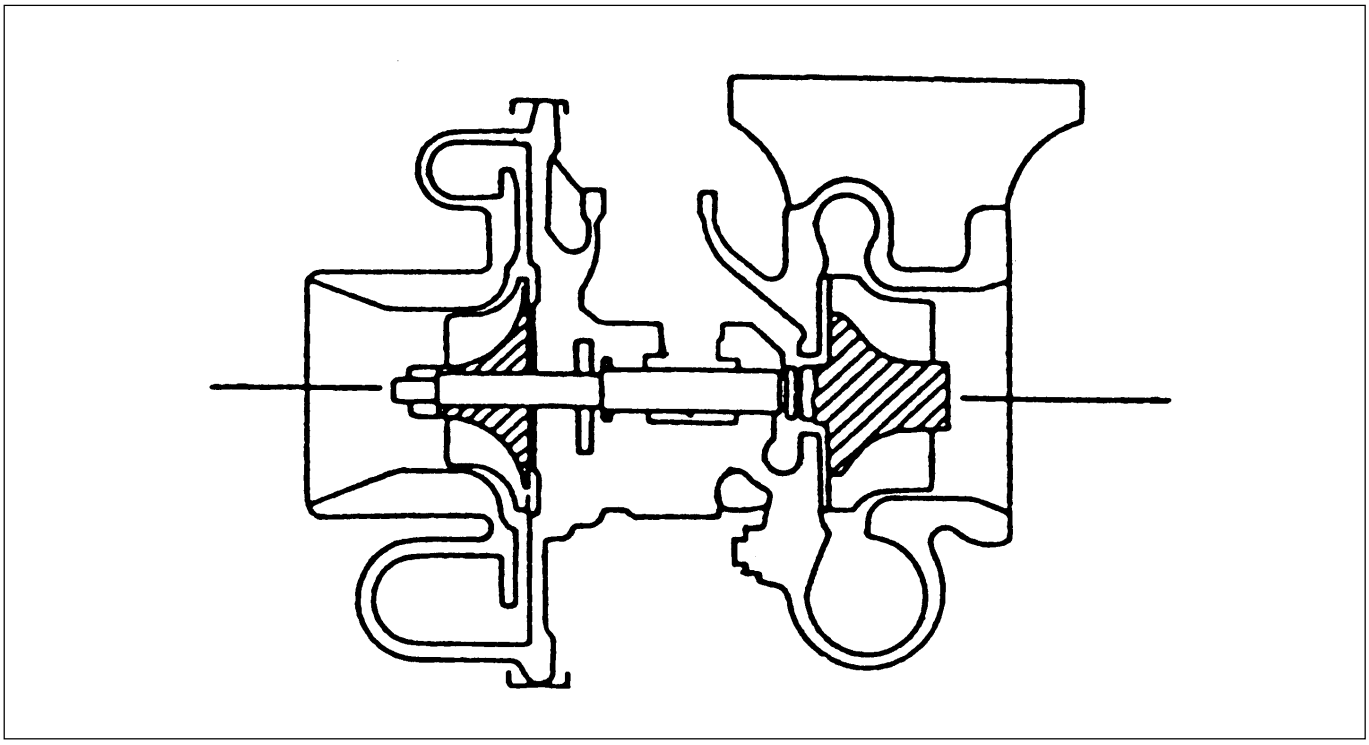

6G-2-1.tif

Garrett turbocharger components are constituted the Center Housing and Rotating Assembly (CHRA), the compressor housing, and the turbine housing.

Rotating parts include the turbine shaft, the compressor wheel, the shaft bearings, the thrust bearings and the oil seal rings. These parts are supported by the center housing.

The turbocharger bearing and turbine shaft are lubricated with engine oil and at the same time are cooled with engine coolant to improve their durability.

The turbocharger increase air intake efficiency, the results in increased engine power, reduced fuel consumption and minimal engine noise.

Turbocharger rotating parts operate at very high speeds and temperatures. The parts materials have been carefully selected and machined to extremely high precision.

The turbocharger for 4HG1T Engine has a unit construction of turbine housing and exhaust manifold.

ON-VEHICLE SERVICE

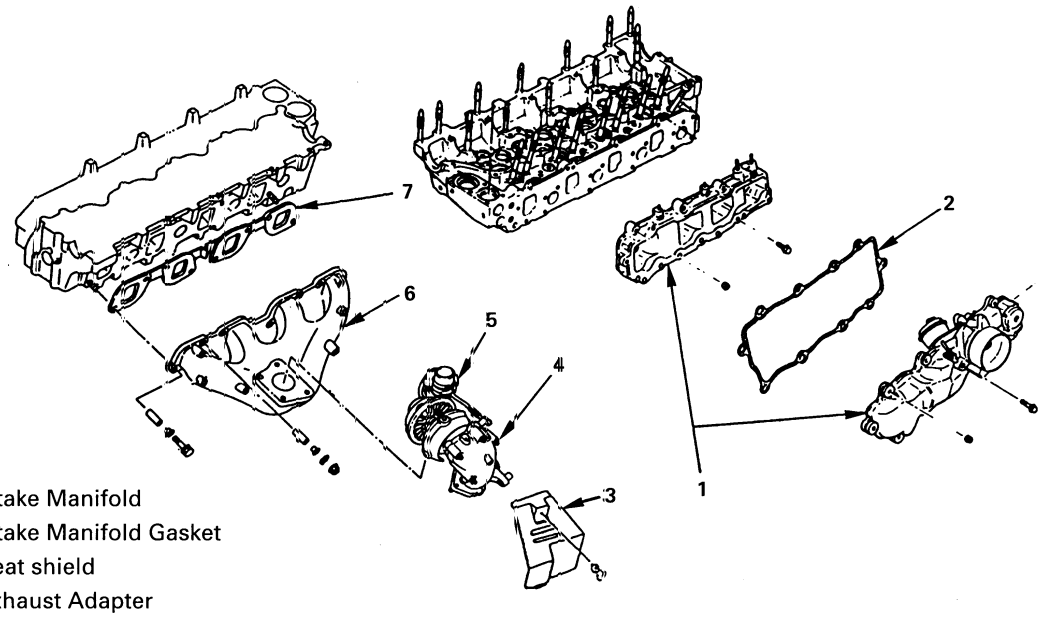

1. Intake Manifold
2. Intake Manifold Gasket
3. Heat shield
4. Exhaust Adapter
5. Turbocharger
6. Exhaust Manifold
7. Exhaust Manifold Gasket

6G-3-1.tif

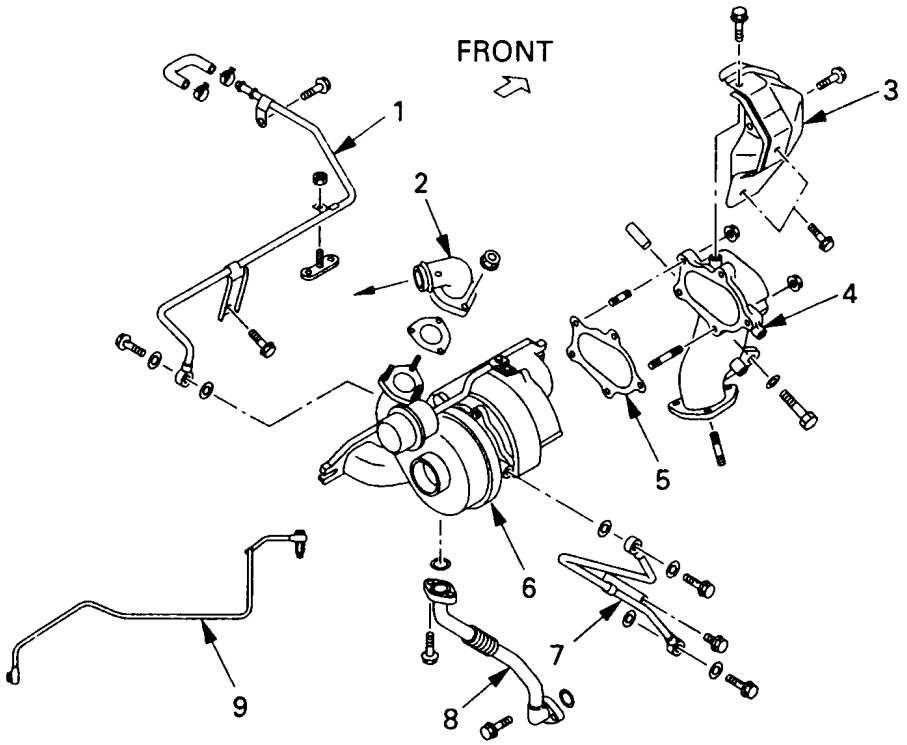

036LX008.tif

CHARGE AIR PIPE

REMOVAL

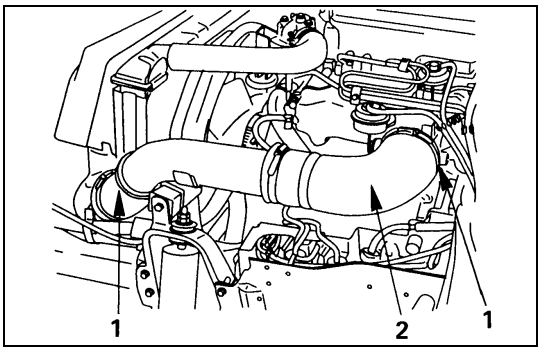

6G-4-1.tif

1. Connecting house clamps.
2. Connecting hoses.
3. Bracket bolts and washers and charge air pipe.
4. Clamps.
5. Connecting hose.
6. Bracket accelerator cable.
7. Bracket engine stop cable and vacuum hose.
8. Engine harness connector.
9. Charge air pipe.
10. Gasket.

CAUTION:
- Hoses for deterioration, or damage.
- Charge air pipes for damage.

INSTALLATION

1. Gasket to the intake manifold.
2. Charge air pipe.
3. Engine harness connector.
4. Bracket engine stop cable and vacuum hose.
5. Bracket accelerator cable.
6. Connecting hose.
7. Clamps.
8. Charge air pipe and bracket bolts.
9. Connecting hoses.
10. Clamps.

INTAKE MANIFOLD

REMOVAL

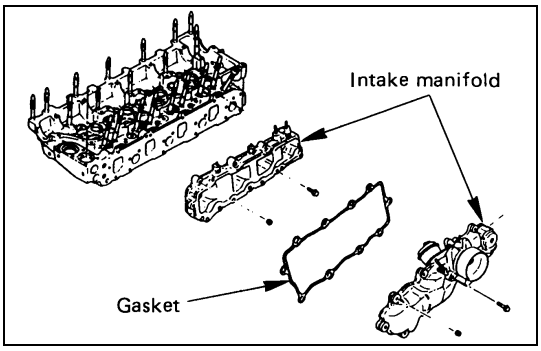

6G-4-2.tif

1. PCV hose.
2. Accelerator cable injection pump side.
3. Connecting hose.
4. Bracket accelerator cable.
5. Bracket engine stop cable and vacuum hose.
6. Engine harness connector.
7. Charge air pipe.
8. Gasket.
9. Injection pipe.
10. Intake manifold.
11. Gasket and discard.

INSTALLATION

1. **Intake manifold.**

Tighten

Intake manifold	N·m (kg·m/lb·ft)
	19 (1.9 / 14)

2. **Injection pipe**

Tighten

Fuel injector line nuts	N·m (kg·m/lb·ft)
	26 (2.7 / 20)

3. **Gasket**
4. **Charge air pipe.**
5. **Engine harness connector.**
6. **Bracket engine stop cable and vacuum hose.**
7. **Bracket accelerator cable.**
8. **Connecting hose.**
9. **Accelerator cable injection pump side.**
10. **PCV hose.**

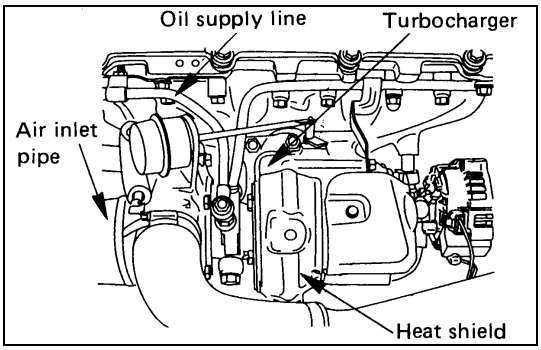

6G-5-1.tif

TURBOCHARGER

Refer to “Statement on Cleanliness and Care” previously in this section.

REMOVAL

1. **Turbocharger air inlet pipe.**
2. **Turbocharger intake pipe.**
3. **Connecting hose.**
4. **Exhaust gas recirculation (EGR) pipe.**
5. **Heat shield bolt.**
6. **Water feed and drain lines.**
7. **Oil feed line.**
8. **Oil drain line.**
9. **Exhaust pipe to exhaust adapter nuts.**
10. **Exhaust adapter to turbocharger nuts.**
11. **Turbocharger to exhaust manifold nuts.**

CAUTION:
The turbocharger for 4HG1-T Engine has a unit construction of turbin housing and exhaust manifold.

INSPECTION AND REPAIR

CAUTION:
- **Turbocharger housing for cracks or damage.**
- **Gasket surfaces for damage.**
- **Seals and gaskets for damage.**
- **Turbine and compressor blades for damage or carbon buildup.**
- **Air and exhaust exit openings for oil or wetness.**
- **For grinding or roughness when spinning turbine and compressor wheels by hand.**
- **For evidence of turbine or compressor blades contacting the shroud or housing. If any of the above conditions exist, the turbocharger must be replaced or repaired by an authorized repair facility.**

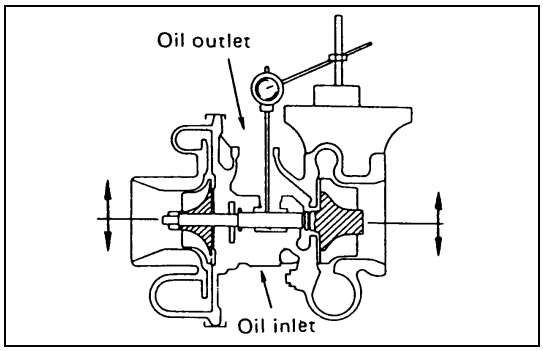

6G-6-1.tif

PLAY IN RADIAL CLEARANCE

Moving the rotor in the radial clearance, measure the play by a dial gage.
- Measure the play at several points while letting the rotor revolve.
- Use only the flat dial gage attachment. Do not use the pointed one.
- Attach the turbocharger and dial gage firmly.

Play in radial clearance mm (in)

Standard	Limit
0.056 - 0.127 (0.0022 - 0.0050)	0.140 (0.0055)

If excessive, replace the turbocharger.

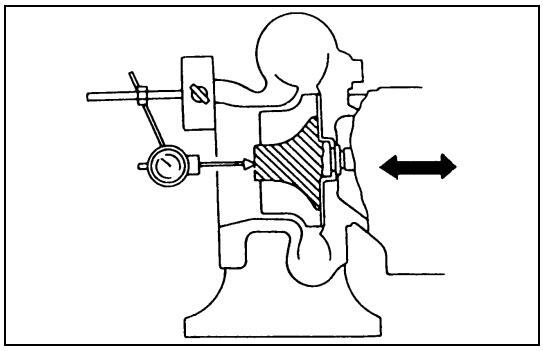
6G-6-2.tif

PLAY IN AXIAL CLEARANCE

Moving the rotor in the axial clearance, measure the play by a dial gage.
- Measure the play at several points while letting the rotor revolve.
- Attach the turbocharger and dial gage firmly.

Play in axial clearance mm (in)

Standard	Limit
0.013 - 0.097 (0.0005 - 0.0038)	0.097 (0.0038)

If excessive, replace the turbocharger.

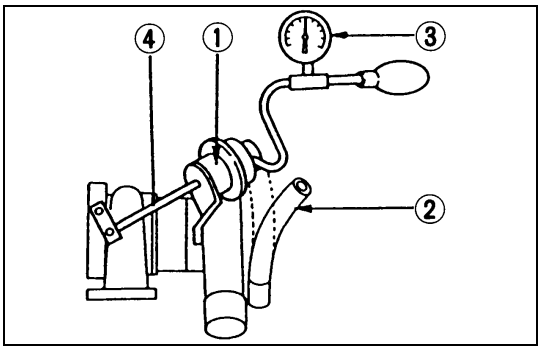

6G-6-3.tif

Operation of waist gate

- Disconnect hose ② from waist gate ①, and install pressure gauge ③ as shown in the figure.
- With the engine stopped, operate the pressure gauge pump to apply pressure to the waist gate for check the waist gate function.

OIL LEAKAGE CHECK

1. Remove the charge air pipe connecting hose to the compressor side of the turbocharger.
2. Clean the area around the compressor wheel.
3. Remove the blow-by hose.
4. Start the engine and let idle. Rev the engine and hold at wide open throttle (WOT) for five seconds, then release and let idle for five seconds. Repeat this cycle for a total of five times then let the engine idle steady for five minutes.
5. Shut off the engine.
6. Check the compressor area for an oil stream.

CAUTION:

- **A stream of oil indicates a possible defective turbocharger. If mist or spray is present, however, this is normal and is NOT indicative of a turbocharger problem.**

7. If the turbocharger is suspect, refer to the on-vehicle service procedures in this section.

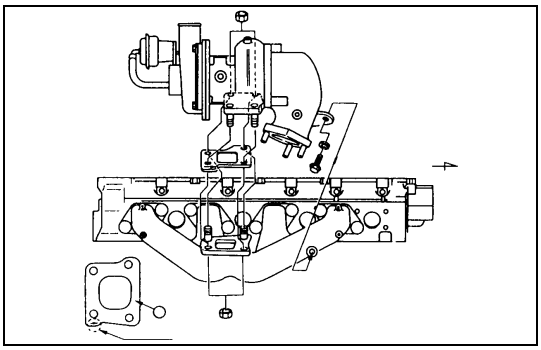

6G-7-1.tif

INSTALLATION

1. **Exhaust manifold to turbocharger.**
2. **New gasket and turbocharger to exhaust manifold.**

Tighten

Turbocharger	N·m (kg·m/lb·ft)
	52 (5.3 / 38)

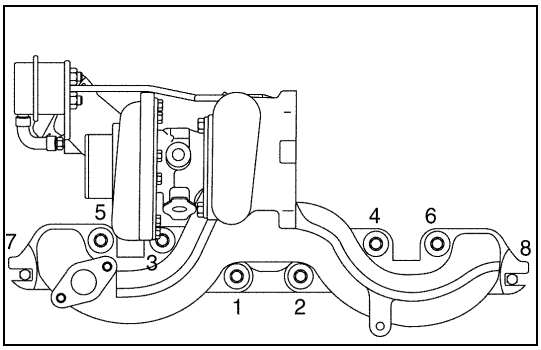

036LX005.tif

3. **Cylinder head to turbinhousing and exhaust manifold. (4HG1-T)**

Exhaust manifold	N·m (kg·m/lb·ft)
	34 (3.5 / 25)

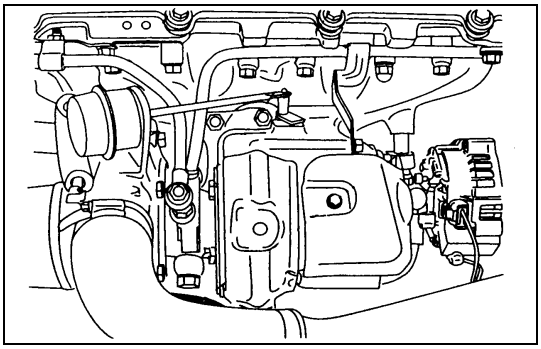

6G-7-2.tif

4. **Turbocharger to exhaust adapter.**

   Tighten

Exhaust adapter	N·m (kg·m/lb·ft)
32 (3.3 / 24)	

5. **Exhaust pipe to exhaust adapter.**

   Tighten

Exhaust pipe	N·m (kg·m/lb·ft)
67 (6.8 / 49)	

6. **Turbocharger oil drain line.**

   Tighten

Oil drain line	N·m (kg·m/lb·ft)
Turbocharger	9 (0.9 / 6)
Cyliner body	21 (2.1 / 15)

7. **Turbocharger oil supply line to turbocharger.**

   Tighten

Oil supply line	N·m (kg·m/lb·ft)
27 (2.8 / 20)	

8. **Water supply and drain lines.**

   Tighten

Water supply	N·m (kg·m/lb·ft)
41 (4.2 / 30)	

9. **Heat shield to exhaust adapter**
10. **Charge air pipe connecting hoses and clamps to turbocharger.**
11. **Air inlet pipe to turbocharger.**

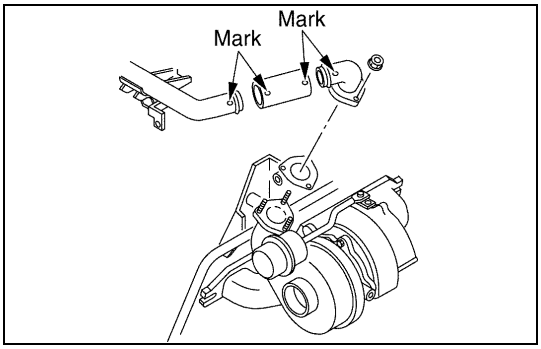

036LX006.tif

12. **Fit the connecting hose over the pipe to its projecting part. (4HG1-T)**
13. **Align connecting hose and pipe marks with each other (4HG1-T)**

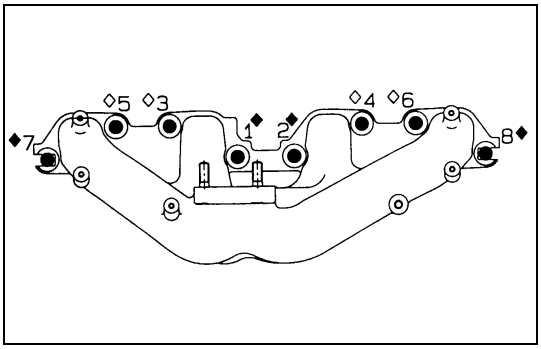

6G-8-1.tif

EXHAUST MANIFOLD

REMOVAL

1. **Turbocharger as outlined previously in this section.**
2. **Heat shield**
3. **Exhaust manifold Bolts, nuts and washers.**
4. **Exhaust manifold**
5. **Gaskets**

CAUTION:

- **Exhaust manifold and cylinder head for cracks or damage to gasket surfaces.**

INSTALLATION

1. **Gaskets.**
2. **Exhaust manifold.**
3. **Washers nuts and bolts.**

Tighten

Exhaust manifold	N·m (kg·m/lb·ft)
	34 (3.5 / 25)

4. **Heat shield**
5. **Turbocharger as outlined previously in this section.**

TURBOCHARGER TURBINE HOUSING REPLACEMENT (For 4HG1-T model)

Changing the turbine housing of the turbocharger (integrated with the exhaust manifold)

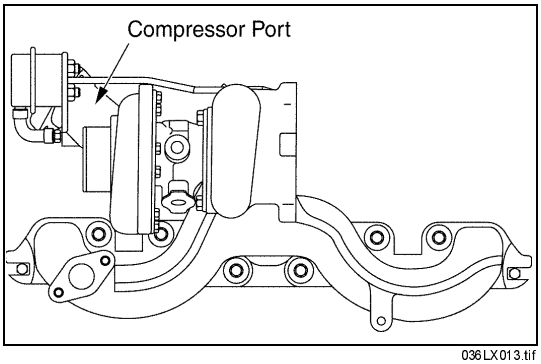

036LX013.tif

INSPECTION

Before replacing the turbine housing, make sure there are no abnormalities in other parts.

Note:

- **It is normal to find some oil inside the compressed-air duct. The oil is to lubricate the turbine shaft, and as long as the exhaust is not abnormally white in color, this does not indicate a problem.**

1) Make sure the parts have no cracks, impeded movement, damage, or distortion of shape, that there is no oil leakage from the seal, and that there is no gas leakage.
2) Turn the rotor to see if it rotates smoothly, also checking the rotation direction as well as the amount of slack.

   Refer to the separate reference sheet for the proper amount of slack.

   If there is an abnormality in any of the above, you will have to change the turbocharger as a unit.

DISASSEMBLY

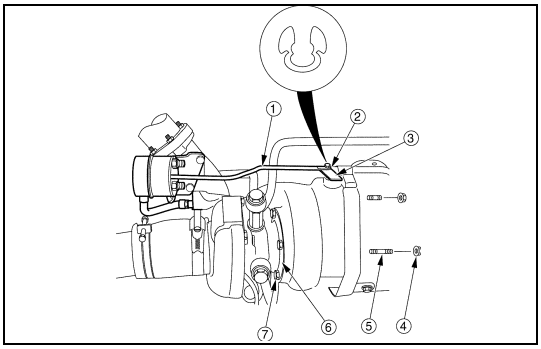

036LX009.tif

1) Separate the end of the actuator rod ① from the E Ring ②, then remove the crank ③ from the end of the rod ①.
2) Remove the turbine housing tie-down bolts ⑦.
3) Separate the turbine housing from the sensor housing.

Note:

- **Be careful not to scratch the turbine blades when removing parts.**

Inspecting the center housing assembly:

Check that none of the blades is bent, cracked, or scratched. Make sure there are no obstructions that would interfere with the movement of the blades or with mounting the new housing. Remove any excess carbon or oil.

REPLACING PARTS

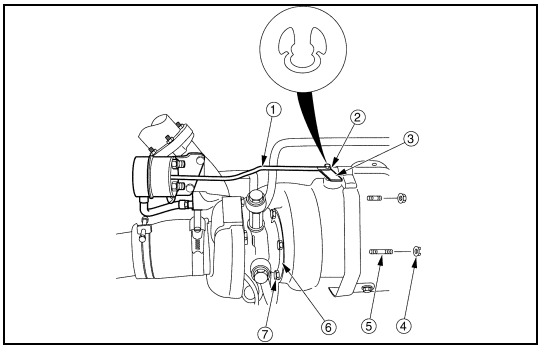

036LX009.tif

When reassembling, be sure to replace the following parts. (Use only genuine Isuzu parts.)

1) E Ring ②
2) Turbine housing tie-down bolts ⑦
3) Turbine housing clamp ⑥
4) Adapter nut
5) Adapter stud ⑤

CLEANING

Thoroughly clean off the oil and carbon from abutting surfaces, the oil passages, flange surfaces, air and exhaust ducts, etc. Always air-dry the parts after cleaning.

ASSEMBLY

1) Insert the sensor housing into the turbine housing.

Note:

- **When inserting the sensor housing, make sure it will not impede the movement of the turbine blades.**

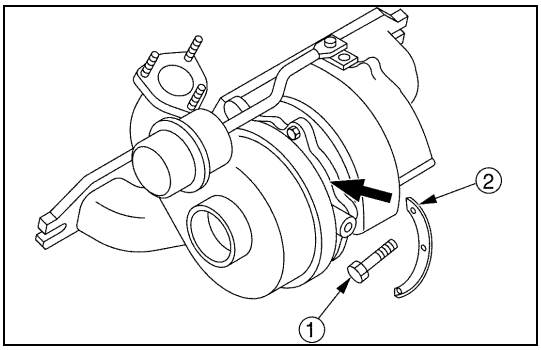

036LX010.tif

2) Apply molybdenum disulfide to the thread and underside of the head of each bolt ①.
3) Temporarily secure the sensor housing in place with the clamp ②.

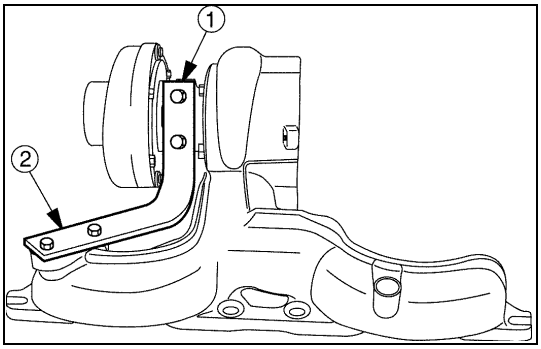

036LX014.tif

4) Connect the oil side of the sensor housing ① and the EGR-connection side of the exhaust manifold ② to the angle setting gauge, then tighten the bolt to secure the gauge in place. (The angle of the sensor housing and turbine housing will be set with the use of this gauge).

Turbocharger housing setting gauge: 5-8840-2673-0

① M6 x P = 1.00

② M8 x P = 1.25

5) To give the sensor housing some slack, loosen the bolt on side ① by half a turn.
6) Tighten the turbine housing tie-down bolts to the specified torque.

Tightening torque of housing tie-down bolts	N-m (kg-m/lb-ft)
	2.6 (2.2 / 16)

7) Remove the bolt that secures the pressure gauge, then remove the gauge.
8) Manually turn the rotor clockwise to be sure it it rotates smoothly. Check for abnormal noise, drag, etc.

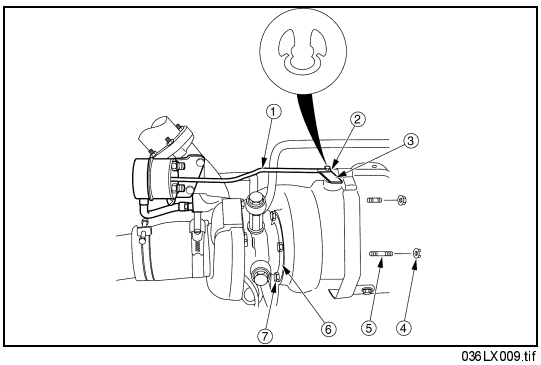

036LX009.tif

9) Attach the end of the actuator rod ① to the crank at the waist gate ③, and secure with the E Ring ②.

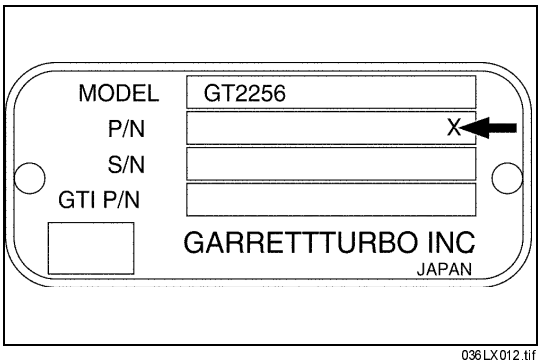

036LX012.tif

10) (Indicate on the nameplate that parts were replaced.)
11) Pour clean oil through the oil filler port to prevent corrosion.
12) Seal the air and exhaust ducts of the turbocharger, as well as the water and oil filler ports to prevent foreign matter from entering.

Follow the assembly directions to reattach to the engine.

CHARGE AIR COOLER

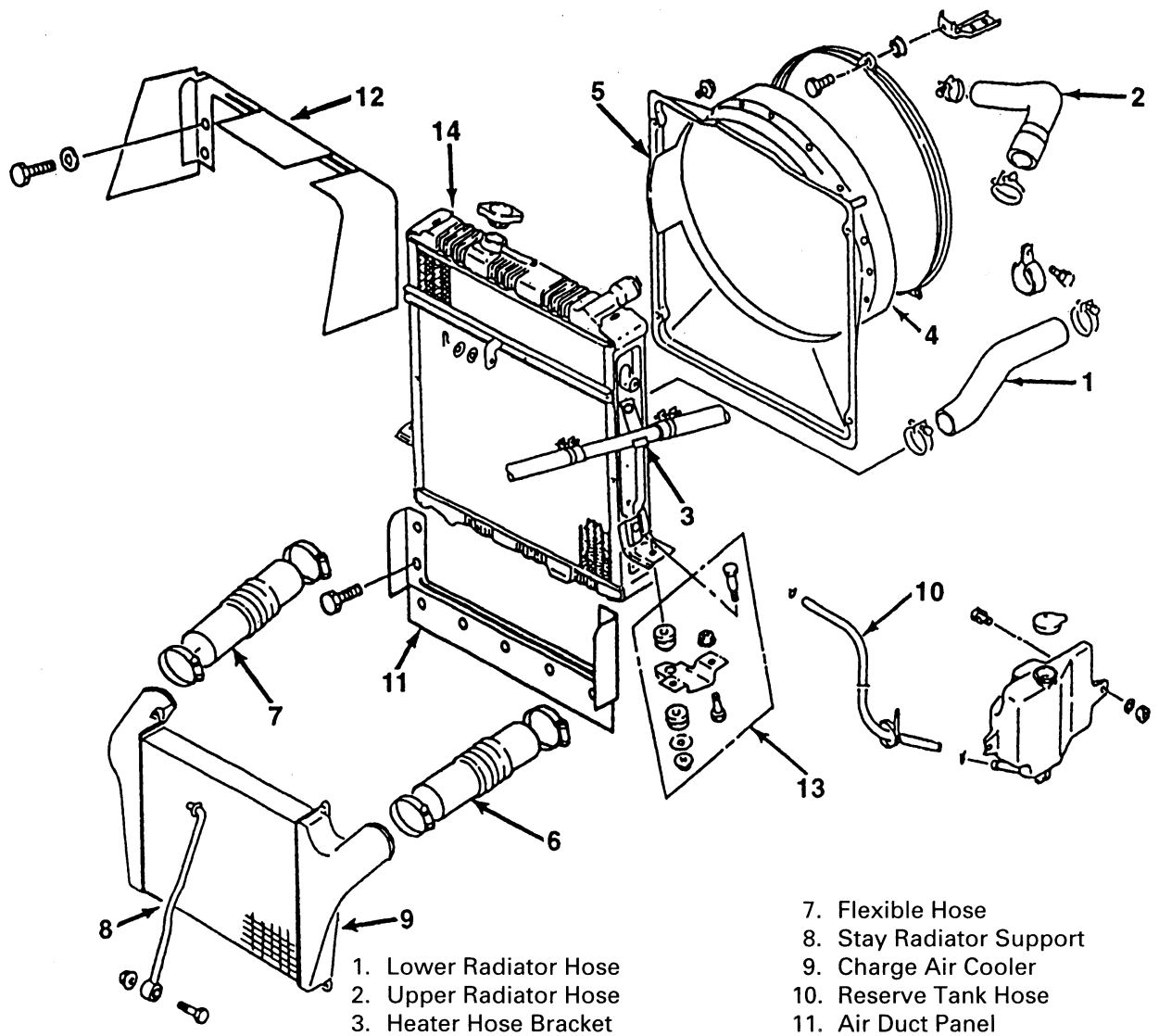

1. Lower Radiator Hose
2. Upper Radiator Hose
3. Heater Hose Bracket
4. Rubber Ring and Bell-Mouth
5. Fan Shroud Assembly
6. Flexible Hose
7. Flexible Hose
8. Stay Radiator Support
9. Charge Air Cooler
10. Reserve Tank Hose
11. Air Duct Panel
12. Guide Panel
13. Mount Nut and Cushion Rubber
14. Radiator Assembly

6G-9-1.tif

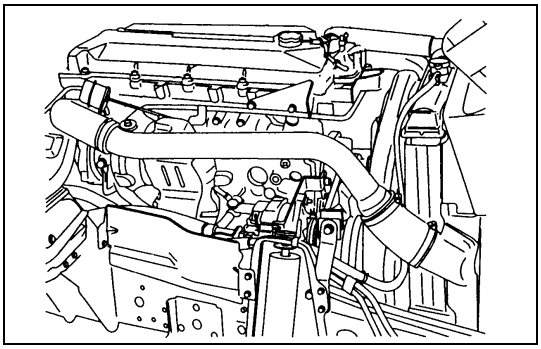

6G-10-1.tif

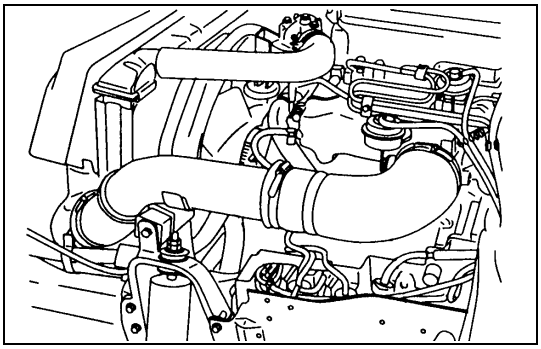

6G-10-2.tif

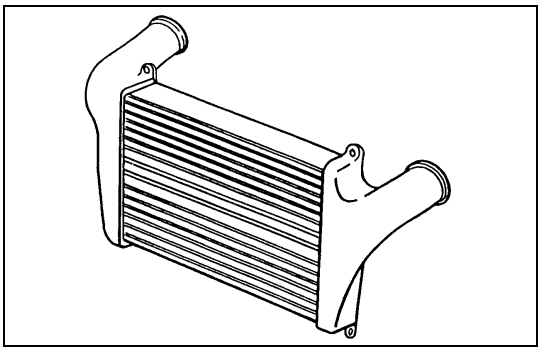

6G-10-3.tif

REMOVAL

- Disconnect the battery ground cables.
- Drain the engine coolant.

1. **Lower radiator hoses.**
2. **Upper radiator hoses.**
3. **Heater hose bracket.**
4. **Rubber Ring, bell-mouth to shroud.**
5. **Fan shroud assembly.**
6. **Flexible hose LH.**
7. **Flexible hose RH.**
8. **Stay radiator support.**
9. **Charge air cooler.**
10. **Reserve tank hose.**
11. **Air duct panel.**
12. **Guide panel.**
13. **Mount nut and cushion rubber.**
14. **Radiator assembly.**

INSTALLATION

14. **Radiator assembly.**
13. **Mount nut and cushion rubber.**
12. **Guide panel.**
11. **Air duct panel.**
10. **Reserve tank hose.**
9. **Charge air cooler.**
8. **Stay radiator support**
7. **Flexible hose RH.**
6. **Flexible hose LH.**
5. **Fan shroud assembly.**
4. **Rubber Ring.**
3. **Heater hose bracket.**
2. **Upper radiator hoses.**
1. **Lower radiator hoses.**

or brackets that were removed.

- Fill the system with new engine coolant as described in COOLING SYSTEM (SEC. 6B) of this manual. Then check the system for leaks.
- Battery ground cables.

LG4H-WE-9691

You are requested to order this manual using the manual number that is shown above.

This manual is applicable for vehicles in all countries except the USA and Canada.

All rights reserved. This manual may not be reproduced in whole or in part, without the permission in writing of ISUZU MOTORS LIMITED.

Issued by

ISUZU MOTORS LIMITED

INTERNATIONAL SERVICE DEPARTMENT

Tokyo, Japan

First edition Feb., 1999 9911-13K-1

No. HGSTG-WE-661 PRINTED IN JAPAN